SUZUKI

GSX-R1000

SERVICE MANUAL

99500-39210-01E

FOREWORD

This manual contains an introductory description on the SUZUKI GSX-R1000 and procedures for its inspection/service and overhaul of its main components.
Other information considered as generally known is not included.
Read the GENERAL INFORMATION section to familiarize yourself with the motorcycle and its maintenance. Use this section as well as other sections to use as a guide for proper inspection and service.
This manual will help you know the motorcycle better so that you can assure your customers of fast and reliable service.

- *This manual has been prepared on the basis of the latest specifications at the time of publication. If modifications have been made since then, differences may exist between the content of this manual and the actual motorcycle.*
- *Illustrations in this manual are used to show the basic principles of operation and work procedures. They may not represent the actual motorcycle exactly in detail.*
- *This manual is written for persons who have enough knowledge, skills and tools, including special tools, for servicing SUZUKI motorcycles. If you do not have the proper knowledge and tools, ask your authorized SUZUKI motorcycle dealer to help you.*

⚠ WARNING

Inexperienced mechanics or mechanics without the proper tools and equipment may not be able to properly perform the services described in this manual. Improper repair may result in injury to the mechanic and may render the motorcycle unsafe for the rider and passenger.

IMPORTANT *(For USA)*

All street-legal Suzuki motorcycles with engine displacement of 50 cc or greater are subject to Environmental Protection agency emission regulations. These regulations set specific standards for exhaust emission output levels as well as particular servicing requirements. This manual includes specific imformation required to properly inspect and service GSX-R1000 in accordance with all EPA regulations. It is strongly recommended that the chapter on Emission Control, Periodic Servicing and Carburetion be thoroughly reviewed before any type of service work is performed. Further information concerning the EPA emission regulations and U.S. Suzuki's emission control program can be found in the U.S. SUZUKI EMISSION CONTROL PROGRAM MANUAL/SERVICE BULLETIN.

SUZUKI MOTOR CORPORATION
Motorcycle Service Department

© COPYRIGHT SUZUKI MOTOR CORPORATION 2000

GROUP INDEX

GENERAL INFORMATION 1
PERIODIC MAINTENANCE 2
ENGINE 3
FI SYSTEM/INTAKE AIR SYSTEM/EXHAUST SYSTEM 4
COOLING AND LUBRICATION SYSTEM 5
CHASSIS 6
ELECTRICAL SYSTEM 7
SERVICING INFORMATION 8
EMISSION CONTROL INFORMATION 9
WIRING DIAGRAM 10

HOW TO USE THIS MANUAL

TO LOCATE WHAT YOU ARE LOOKING FOR:

1. The text of this manual is divided into sections.
2. The section titles are listed in the GROUP INDEX.
3. Holding the manual as shown at the right will allow you to find the first page of the section easily.
4. The contents are listed on the first page of each section to help find the item and page you need.

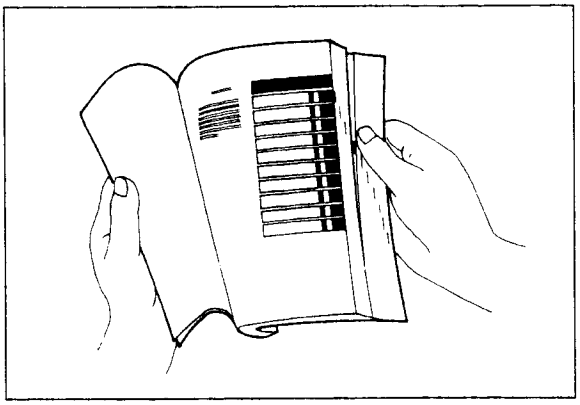

COMPONENT PARTS AND WORK TO BE DONE

Under the name of each system or unit, is its exploded view. Work instructions and other service information such as the tightening torque, lubricating points and locking agent points, are provided.

Example: Front wheel

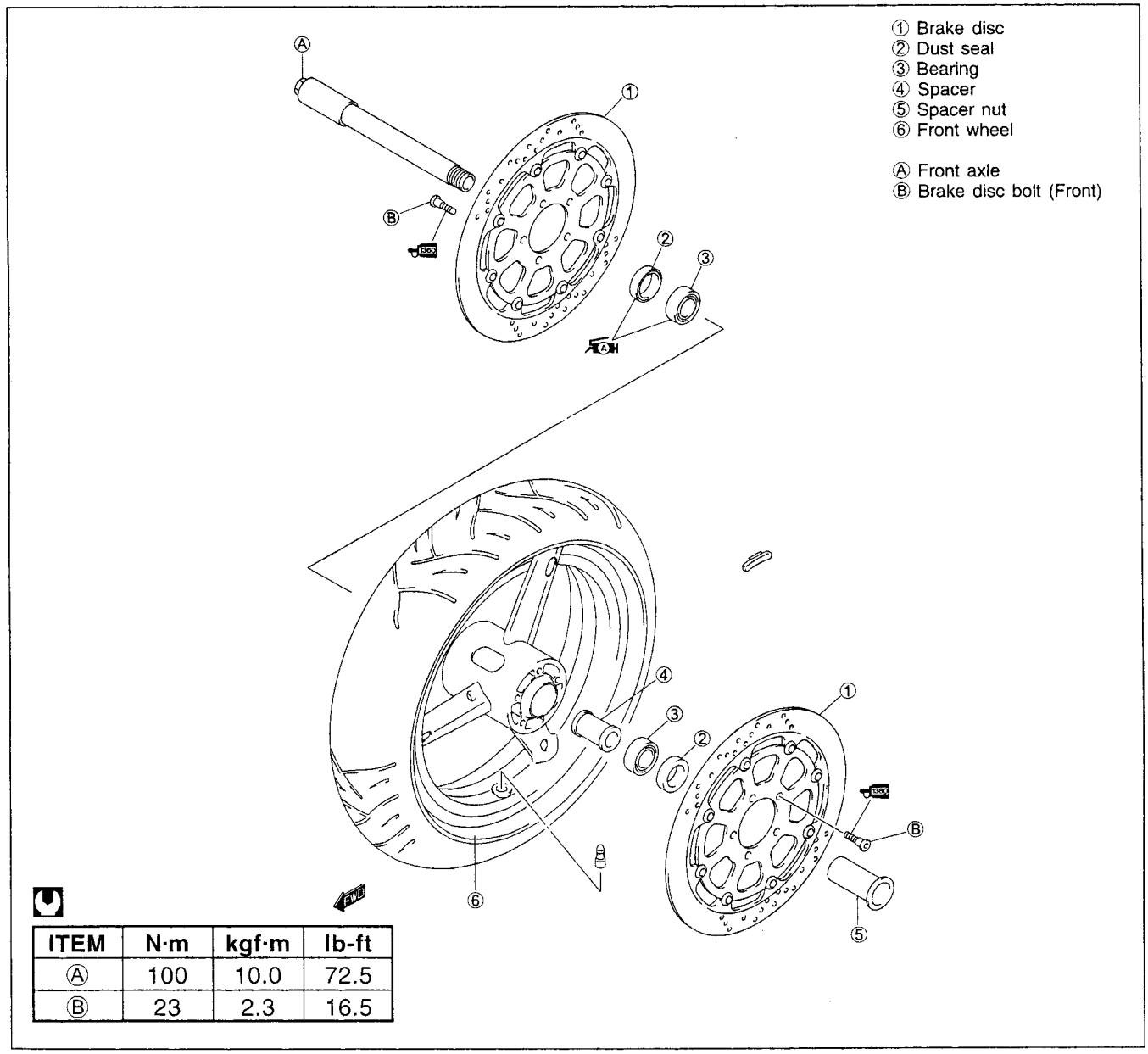

ITEM	N·m	kgf·m	lb-ft
Ⓐ	100	10.0	72.5
Ⓑ	23	2.3	16.5

SYMBOL (For USA)

Listed in the table below are the symbols indicating instructions and other information necessary for servicing. The meaning of each symbol is also included in the table.

SYMBOL	DEFINITION	SYMBOL	DEFINITION
	Torque control required. Data beside it indicates specified torque.		Use engine coolant.
	Apply oil. Use engine oil unless otherwise specified.		Use fork oil. 99000-99044-L01
	Apply molybdenum oil solution. (Mixture of engine oil and SUZUKI MOLY PASTE in a ratio of 1:1)		Apply or use brake fluid.
	Apply SUZUKI SUPER GREASE "A". 99000-25030		Measure in voltage range.
	Apply SUZUKI MOLY PASTE. 99000-25140		Measure in current range.
	Apply SUZUKI BOND "1207B". 99104-31140	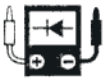	Measure in diode test range.
	Apply THREAD LOCK SUPER "1303". 99000-32030		Measure in continuity test range.
	Apply THREAD LOCK "1342". 99000-32050		Use special tool.
	Apply THREAD LOCK SUPER "1360". 99000-32130		Indication of service data.

SYMBOL (For the other countries)

Listed in the table below are the symbols indicating instructions and other information necessary for servicing. The meaning of each symbol is also included in the table.

SYMBOL	DEFINITION	SYMBOL	DEFINITION
	Torque control required. Data beside it indicates specified torque.		Apply THREAD LOCK SUPER "1360". 99000-32130
	Apply oil. Use engine oil unless otherwise specified.		Use engine coolant. 99000-99032-11X
	Apply molybdenum oil solution. (Mixture of engine oil and SUZUKI MOLY PASTE in a ratio of 1:1)		Use fork oil. 99000-99044-L01
	Apply SUZUKI SUPER GREASE "A". 99000-25010		Apply or use brake fluid.
	Apply SUZUKI MOLY PASTE. 99000-25140	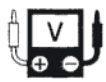	Measure in voltage range.
	Apply SUZUKI BOND "1207B". 99000-31140	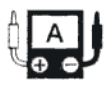	Measure in current range.
	Apply SUZUKI BOND "1215" 99000-31110	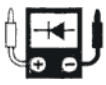	Measure in diode test range.
	Apply THREAD LOCK SUPER "1303". 99000-32030		Measure in continuity test range.
	Apply THREAD LOCK SUPER "1322". 99000-32110		Use special tool.
	Apply THREAD LOCK "1342". 99000-32050		Indication of service data.

ABBREVIATIONS MAY BE USED IN THIS MANUAL

A

ABDC : After Bottom Dead Center
AC : Alternating Current
ACL : Air Cleaner, Air Cleaner Box
API : American Petroleum Institute
ATDC : After Top Dead Center
ATM Pressure : Atmospheric Pressure
Atmospheric Pressure Sensor (APS, AP Sensor)
A/F : Air Fuel Mixture

B

BBDC : Before Bottom Dead Center
BTDC : Before Top Dead Center
B+ : Battery Positive Voltage

C

CKP Sensor : Crankshaft Position Sensor (CKPS)
CKT : Circuit
CLP Switch : Clutch Lever Position Switch (Clutch Switch)
CMP Sensor : Camshaft Position Sensor (CMPS)
CO : Carbon Monoxide
CPU : Central Processing Unit

D

DC : Direct Current
DMC : Dealer Mode Coupler
DOHC : Double Over Head Camshaft
DRL : Daytime Running Light

E

ECM : Engine Control Module
Engine Control Unit (ECU)
(FI Control Unit)
ECT Sensor : Engine Coolant Temperature Sensor (ECTS), Water Temp. Sensor (WTS)
EVAP : Evaporative Emission
EVAP Canister : Evaporative Emission Canister (Canister)
EXC System : Exhaust Control System (EXCS)
EXC Valve : Exhaust Control Valve (EXCV)
EXCV Actuator : Exhaust Control Valve Actuator (EXCVA)

F

FI : Fuel Injection, Fuel Injector
FP : Fuel Pump
FPR : Fuel Pressure Regulator
FP Relay : Fuel Pump Relay

G

GEN : Generator
GND : Ground
GP Switch : Gear Position Switch

H

HC : Hydrocarbons

I

IAP Sensor : Intake Air Pressure Sensor (IAPS)
IAT Sensor : Intake Air Temperature Sensor (IATS)
IG : Ignition

L

LCD	: Liquid Crystal Display
LED	: Light Emitting Diode (Malfunction Indicator Lamp)
LH	: Left Hand

M

MAL-Code	: Malfunction Code (Diagnostic Code)
Max	: Maximum
MIL	: Malfunction Indicator Lamp (LED)
Min	: Minimum

N

NOx	: Nitrogen Oxides

O

OHC	: Over Head Camshaft
OPS	: Oil Pressure Switch

P

PCV	: Positive Crankcase Ventilation (Crankcase Breather)

R

RH	: Right Hand
ROM	: Read Only Memory

S

SAE	: Society of Automotive Engineers
STC System	: Secondary Throttle Control System (STCS)
STP Sensor	: Secondary Throttle Position Sensor (STPS)
ST Valve	: Secondary Throttle Valve (STV)
STV Actuator	: Secondary Throttle Valve Actuator (STVA)

T

TO Sensor	: Tip Over Sensor (TOS)
TP Sensor	: Throttle Position Sensor (TPS)

SAE-TO-FORMER SUZUKI TERM (ONLY FOR USA)

This table lists SAE (Society of Automotive Engineers) J1930 terms and abbreviations which may be used in this manual in compliance with SAE recommendations, as well as their former SUZUKI names.

SAE TERM		FORMER SUZUKI TERM
FULL TERM	ABBREVIATION	
A		
Air Cleaner	ACL	Air Cleaner, Air Cleaner Box
B		
Barometric Pressure	BARO	Barometric Pressure, Atmospheric Pressure (APS, AP Sensor)
Battery Positive Voltage	B+	Battery Voltage, +B
C		
Camshaft Position Sensor	CMP Sensor	Camshaft Position Sensor(CMPS)
Crankshaft Position Sensor	CKP Sensor	Crankshaft Position Sensor(CKPS), Crank Angle
D		
Data Link Connector	DLC	Dealer Mode Coupler
Diagnostic Test Mode	DTM	——
Diagnostic Trouble Code	DTC	Diagnostic Code, Malfunction Code
E		
Electronic Ignition	EI	——
Engine Control Module	ECM	Engine Control Module (ECM) FI Control Unit, Engine Control Unit(ECU)
Engine Coolant Level	ECL	Coolant Level
Engine Coolant Temperature	ECT	Coolant Temperature, Engine Coolant Temperature Water Temperature
Engine Speed	RPM	Engine Speed(RPM)
Evaporative Emission	EVAP	Evaporative Emission
Evaporative Emission Canister	EVAP Canister	—— (Canister)
Exhaust Control System	EXCS	EXC System (EXCS)
Exhaust Control Valve	EXCV	EXC Valve (EXCV)
Exhaust Control Valve Actuator	EXCVA	EXCV Actuator (EXCVA)
Purge Valve	Purge Valve	Purge Valve(SP Valve)
F		
Fan Control	FC	——
Fuel Level Sensor	——	Fuel Level Sensor, Fuel Level Gauge
Fuel Pump	FP	Fuel Pump(FP)

SAE TERM		FORMER SUZUKI TERM
FULL TERM	ABBREVIATION	
G		
Generator	GEN	Generator
Ground	GND	Ground(GND,GRD)
I		
Idle Speed Control	ISC	—
Ignition Control	IC	Electronic Spark Advance(ESA)
Ignition Control Module	ICM	—
Intake Air Temperature	IAT	Intake Air Temperature(IAT), Air Temperature
M		
Malfunction Indicator Lamp	MIL	LED Lamp Malfunction Indicator Lamp(MIL)
Manifold Absolute Pressure	MAP	Intake Air Pressure, Intake Vacuum
Mass Air Flow	MAF	Air Flow
O		
On-Board Diagnostic	OBD	Self-Diagnosis Function Diagnostic
Open Loop	OL	—
P		
Programmable Read Only Memory	PROM	—
Pulsed Secondary Air Injection	PAIR	Pulse Air Control (PAIR)
R		
Random Access Memory	RAM	—
Read Only Memory	ROM	ROM
S		
Secondary Air Injection	AIR	—
Secondary Throttle Control System	STCS	STC System (STCS)
Secondary Throttle Valve	STV	ST Valve (STV)
Secondary Throttle Valve Actuator	STVA	STV Actuator (STVA)
T		
Throttle Body	TB	Throttle Body(TB)
Throttle Body Fuel Injection	TBI	Throttle Body Fuel Injection(TBI)
Throttle Position Sensor	TP Sensor	TP Sensor(TPS)
V		
Voltage Regulator	VR	Voltage Regulator
Volume Air Flow	VAF	Air Flow

GENERAL INFORMATION

1

CONTENTS

WARNING/CAUTION/NOTE 1- 2
GENERAL PRECAUTIONS 1- 2
SUZUKI GSX-R1000K1 (2001-MODEL) 1- 4
SERIAL NUMBER LOCATION 1- 4
FUEL, OIL AND ENGINE COOLANT RECOMMENDATION 1- 5
FUEL 1- 5
ENGINE OIL 1- 5
BRAKE FLUID 1- 5
FRONT FORK OIL 1- 5
ENGINE COOLANT 1- 6
WATER FOR MIXING 1- 6
ANTI-FREEZE/ENGINE COOLANT 1- 6
LIQUID AMOUNT OF WATER/ENGINE COOLANT 1- 6
BREAK-IN PROCEDURES 1- 6
CYLINDER IDENTIFICATION 1- 6
INFORMATION LABELS 1- 7
SPECIFICATIONS 1- 8
COUNTRY AND AREA CODES 1-10

WARNING/CAUTION/NOTE

Please read this manual and follow its instructions carefully. To emphasize special information, the symbol and the words WARNING, CAUTION and NOTE have special meanings. Pay special attention to the messages highlighted by these signal words.

⚠ WARNING

Indicates a potential hazard that could result in death or injury.

⚠ CAUTION

Indicates a potential hazard that could result in motorcycle damage.

NOTE:

Indicates special information to make maintenance easier or instructions clearer.

Please note, however, that the warnings and cautions contained in this manual cannot possibly cover all potential hazards relating to the servicing, or lack of servicing, of the motorcycle. In addition to the WARNINGS and CAUTIONS stated, you must use good judgement and basic mechanical safety principles. If you are unsure about how to perform a particular service operation, ask a more experienced mechanic for advice.

GENERAL PRECAUTIONS

⚠ WARNING

- **Proper service and repair procedures are important for the safety of the service mechanic and the safety and reliability of the motorcycle.**
- **When 2 or more persons work together, pay attention to the safety of each other.**
- **When it is necessary to run the engine indoors, make sure that exhaust gas is forced outdoors.**
- **When working with toxic or flammable materials, make sure that the area you work in is well-ventilated and that you follow all of the material manufacturer's instructions.**
- **Never use gasoline as a cleaning solvent.**
- **To avoid getting burned, do not touch the engine, engine oil, radiator and exhaust system until they have cooled.**
- **After servicing the fuel, oil, engine coolant, exhaust or brake systems, check all lines and fittings related to the system for leaks.**

⚠ CAUTION

* If parts replacement is necessary, replace the parts with Suzuki Genuine Parts or their equivalent.
* When removing parts that are to be reused, keep them arranged in an orderly manner so that they may be reinstalled in the proper order.
* Be sure to use special tools when instructed.
* Make sure that all parts used in reassembly are clean. Lubricate them when specified.
* Use the specified lubricant, bond, or sealant.
* When removing the battery, disconnect the negative cable first and then the positive cable.
* When reconnecting the battery, connect the positive cable first and then the negative cable, and cover the positive terminal with the terminal cover.
* When performing service to electrical parts, disconnect the battery negative cable unless the service procedure requires the battery power.
* When tightening cylinder head and crankcase bolts and nuts, tighten the larger sizes first. Always tighten the bolts and nuts diagonally from the inside working out and to the specified tightening torque.
* Whenever you remove oil seals, gaskets, packing, O-rings, locking washers, self-locking nuts, cotter pins, circlips, and certain other parts as specified, be sure to replace them with new ones. Also, before installing these new parts, be sure to remove any left over material from the mating surfaces.
* Never reuse a circlip. When installing a new circlip, take care not to expand the end gap larger than required to slip the circlip over the shaft. After installing a circlip, always ensure that it is completely seated in its groove and securely fitted.
* Use a torque wrench to tighten fasteners to the specified torque. Wipe off grease and oil if a thread is smeared with them.
* After reassembling, check parts for tightness and proper operation.

* To protect the environment, do not unlawfully dispose of used motor oil, engine coolant and other fluids: batteries, and tires.
* To protect the earth's natural resources, properly dispose of used motorcycles and parts.

SUZUKI GSX-R1000K1 (2001-MODEL)

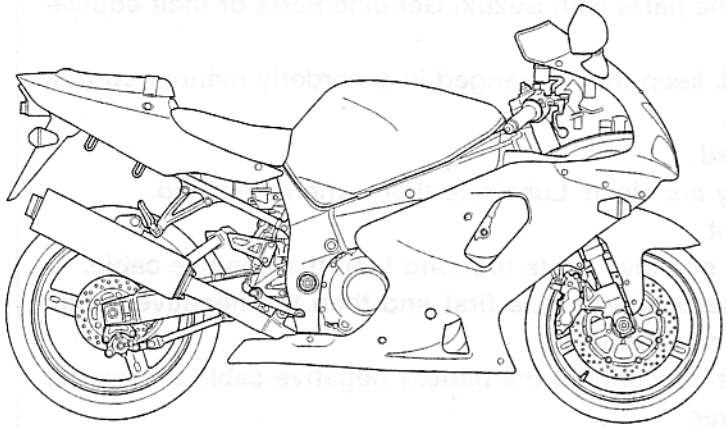

RIGHT SIDE

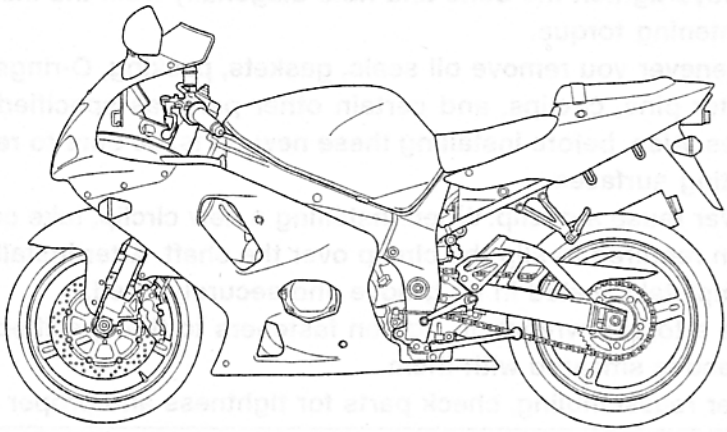

LEFT SIDE

* Difference between photograph and actual motorcycle depends on the markets.

SERIAL NUMBER LOCATION

The frame serial number or V.I.N. (Vehicle Identification Number) Ⓐ is stamped on the right side of the steering head pipe. The engine serial number Ⓑ is located on the rear side of the crankcase. These numbers are required especially for registering the machine and ordering spare parts.

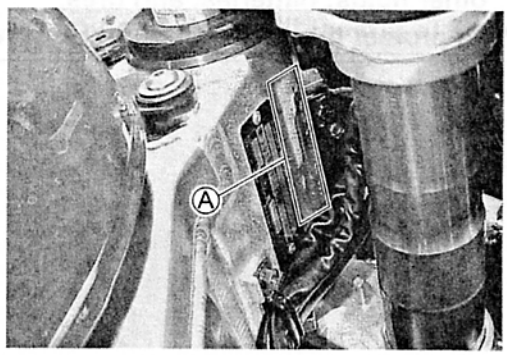

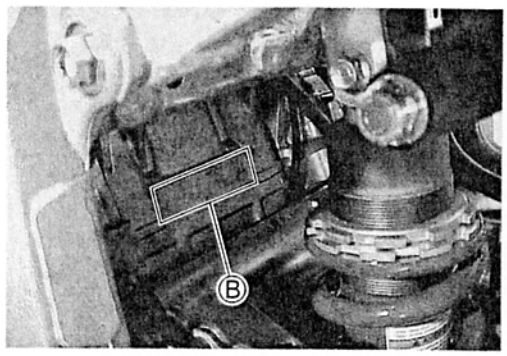

FUEL, OIL AND ENGINE COOLANT RECOMMENDATION

FUEL (For USA and CANADA)

Use only unleaded gasoline of at least 90 pump octane ($\frac{R+M}{2}$). Gasoline containing MTBE (Methyl Tertiary Butyl Ether), less than 10% ethanol, or less than 5% methanol with appropriate cosolvents and corrosion inhibitor is permissible.

FUEL (For the other countries)

Gasoline used should be graded 95 octane (Research Method) or higher. An unleaded gasoline is recommended.

ENGINE OIL (For USA)

SUZUKI recommends the use of SUZUKI PERFORMANCE 4 MOTOR OIL or an oil which is rated SF or SG under the API (American Petroleum Institute) service classification. The recommended viscosity is SAE 10W/40. If an SAE 10W/40 oil is not available, select an alternative according to the right chart.

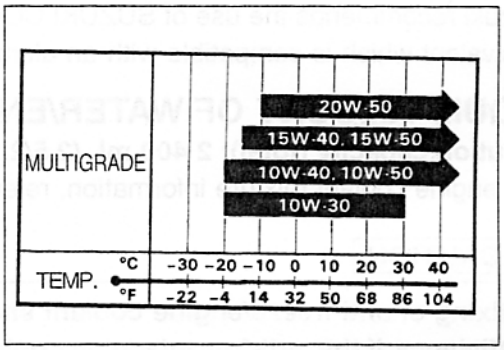

ENGINE OIL (For the other countries)

Use a premium quality 4-stroke motor oil to ensure longer service life of your motorcycle. Use only oils which are rated SF or SG under the API service classification.
The recommended viscosity is SAE 10W-40. If an SAE 10W-40 motor oil is not available, select an alternative according to the right chart.

BRAKE FLUID

Use DOT4 brake fluid.

⚠ WARNING

Since the brake system of this motorcycle is filled with a glycol-based brake fluid by the manufacturer, do not use or mix different types of fluid such as silicone-based and petroleum-based fluid for refilling the system, otherwise serious damage will result.
Do not use any brake fluid taken from old or used or unsealed containers.
Never re-use brake fluid left over from a previous servicing, which has been stored for a long period.

FRONT FORK OIL

Use fork oil L01 or an equivalent fork oil.

ENGINE COOLANT

Use an anti-freeze/engine coolant compatible with an aluminum radiator, mixed with distilled water only.

WATER FOR MIXING

Use distilled water only. Water other than distilled water can corrode and clog the aluminum radiator.

ANTI-FREEZE/ENGINE COOLANT

The engine coolant perform as a corrosion and rust inhabit as well as anti-freeze. Therefore, the engine coolant should be used at all times even though the atmospheric temperature in your area does not go down to freezing point.

Suzuki recommends the use of SUZUKI COOLANT anti-freeze/engine coolant. If this is not available, use an equivalent which is compatible with an aluminum radiator.

LIQUID AMOUNT OF WATER/ENGINE COOLANT

Solution capacity (total): 2 400 ml (2.5/2.1 US/Imp qt)

For engine coolant mixture information, refer to cooling system section. (☞ 5-2)

⚠ CAUTION

Mixing of anti-freeze/engine coolant should be limited to 60%. Mixing beyond it would reduce its efficiency. If the anti-freeze/engine coolant mixing ratio is below 50%, rust inhabiting performance is greatly reduced. Be sure to mix it above 50% even though the atmospheric temperature does not go down to the freezing point.

BREAK-IN PROCEDURES

During manufacture only the best possible materials are used and all machined parts are finished to a very high standard but it is still necessary to allow the moving parts to "BREAK-IN" before subjecting the engine to maximum stresses. The future performance and reliability of the engine depends on the care and restraint exercised during its early life. The general rules are as follows.

• Keep to these break-in procedures:

Initial 800 km (500 miles): Below 6 000 r/min
Up to 1 600 km (1 000 miles): Below 9 000 r/min
Over to 1 600 km (1 000 miles): Below 12 500 r/min

• Upon reaching an odometer reading of 1 600 km (1 000 miles) you can subject the motorcycle to full throttle operation. However, do not exceed 12 500 r/min at any time.

CYLINDER IDENTIFICATION

The four cylinders of this engine are identified as No.1, No.2, No.3 and No.4 cylinder, as counted from left to right (as viewed by the rider on the seat).

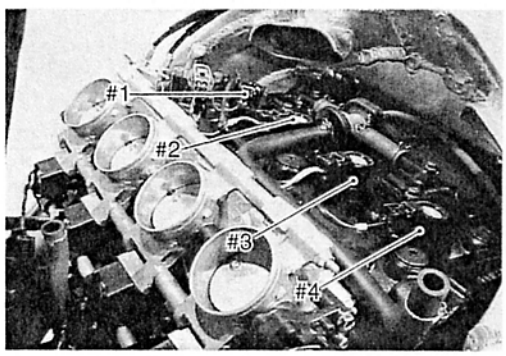

INFORMATION LABELS

	GSX-R1000	GSX-R1000UD	GSX-R1000UF
① Noise label	○ For E-03, 24, 33		
② Information label	○ For E-03, 28, 33		
③ Vacuum hose routing label	○ For E-33		
④ Fuel caution label	○ For E-02, 24		
⑤ Manual notice label	○ For E-03, 33		
⑥ Frame caution label	○	○	○
⑦ Screen warning label	○	○	○
⑧ Steering warning label	○	○	○
⑨ Tire pressure label	○	○	○
⑩ Warning safety label	○	○	○
⑪ ICES Canada label	○ For E-28		
⑫ ID plate	○ For E-02, 19, 24	○	○
⑬ E-19 ID label			○
⑭ Safety plate	○ For E-03, 28, 33		

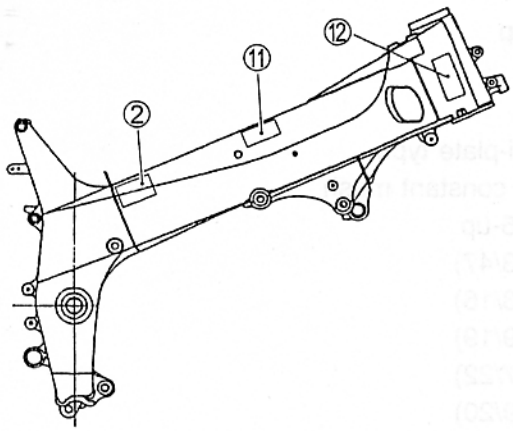

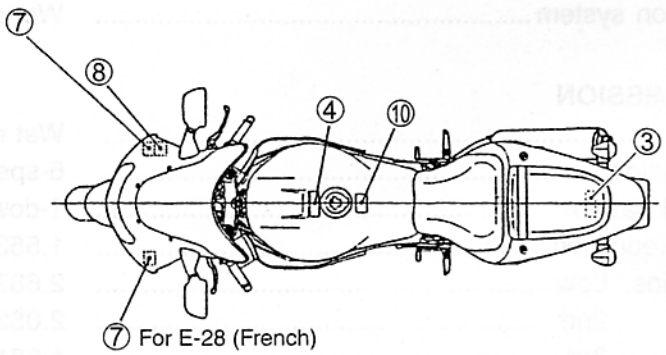

⑦ For E-28 (French)

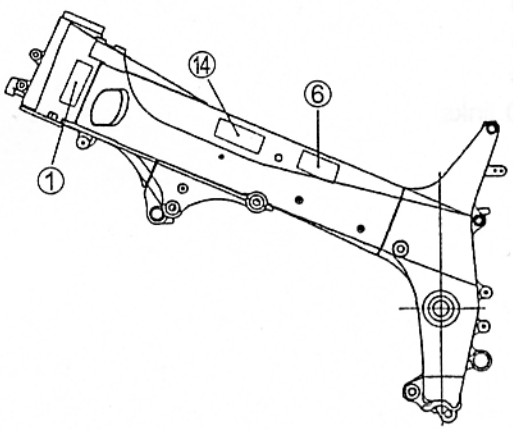

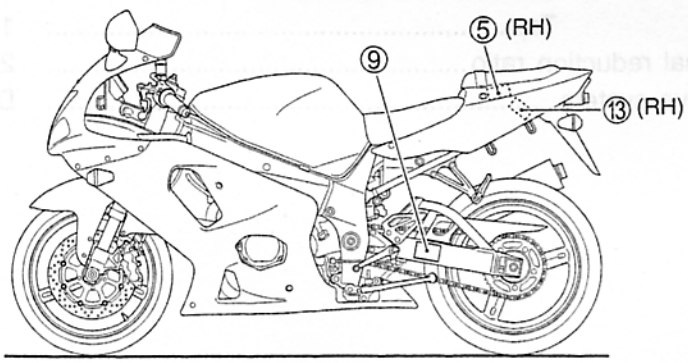

SPECIFICATIONS

DIMENSIONS AND DRY MASS

Overall length	2 045 mm (80.5 in)
Overall width	715 mm (28.1 in)
Overall height	1 135 mm (44.7 in)
Wheelbase	1 410 mm (55.5 in)
Ground clearnce	130 mm (5.1 in)
Seat height	830 mm (32.7 in)
Dry mass	171 kg (376 lbs) ..... For E-33 170 kg (374 lbs) ..... For the others

ENGINE

Type	Four-stroke, Liquid-cooled, DOHC
Number of cylinders	4
Valve clearance IN	0.10 – 0.20 mm (0.004 – 0.008 in)
EX	0.20 – 0.30 mm (0.008 – 0.012 in)
Bore	73.0 mm (2.874 in)
Stroke	59.0 mm (2.323 in)
Piston displacement	988 cm^3 (60.3 cu. in)
Compression ratio	12.0 : 1
Fuel system	Fuel injection
Air cleaner	Non-woven fabric element
Starter system	Electric
Lubrication system	Wet sump

TRANSMISSION

Clutch	Wet multi-plate type
Transmission	6-speed, constant mesh
Gearshift pattern	1-down, 5-up
Primary reduction ratio	1.553 (73/47)
Gear ratios, Low	2.687 (43/16)
2nd	2.052 (39/19)
3rd	1.681 (37/22)
4th	1.450 (29/20)
5th	1.304 (30/23)
Top	1.208 (29/24)
Final reduction ratio	2.470 (42/17)
Drive system	DID50V4, 110 links

CHASSIS

Front suspension	Inverted telescopic, coil spring, oil damped, spring pre-load fully adjustable, rebound and compression damping force adjustable.
Rear suspension	Link type,gas/oil damped, coil spring, spring pre-road fully adjustable, rebound damping force and compression damping force adjustable.
Caster	24°
Trail	96 mm (3.8 in)
Steering angle	29° (right & left)
Turning radius	3.2 m (10.5 ft)
Front brake	Disc brake, twin
Rear brake	Disc brake
Front tire size	120/70 ZR17 (58 W), tubeless
Rear tire size	190/50 ZR17 (73 W), tubeless

ELECTRICAL

Ignition type	Electronic ignition (Transistorized)
Ignition timing	8° B.T.D.C. at 1 150 r/min ..... #1·4 4° B.T.D.C. at 1 150 r/min ..... #2·3
Spark plug	NGK CR9E, DENSO U27ESR-N
Battery	12V 36.0 kC (10 Ah)/10HR
Generator	Three-phase A.C. Generator
Main fuse	30A
Fuse	15/15/15/15/10/10A
Headlight	12V 60/55W (H4) × 2 ..... E-03, 24, 28, 33 12V 55+55/55W (H7) ..... Others
Position/parking light	12V 5W .....Except for E-03, 24, 28, 33 models
Turn signal light	12V 21W
Brake light/Taillight	12V 21/5W × 2
Combination meter light	LED
Neutral indicator light	LED
High beam indicator light	LED
Turn signal indicator light	LED
Fuel level indicator light	LED
FI/Oil pressure/Engine coolant temp. indicator light	LED

CAPACITIES

Fuel tank, including reserve	18 L (4.8/4.0 US/Imp gal)
Engine oil, oil change	3 000 ml (3.2/2.6 US/Imp qt)
with filter change	3 300 ml (3.5/2.9 US/Imp qt)
overhaul	3 600 ml (3.8/3.2 US/Imp qt)
Coolant	2 400 ml (2.5/2.1 US/Imp qt)
Front fork oil (each leg)	517 ml (17.5/18.2 US/Imp oz)

These specifications are subject to change without notice.

COUNTRY AND AREA CODES

The following codes stand for the applicable country(-ies) and area(-s).

MODEL	CODE	COUNTRY or AREA
GSX-R1000	E-02	U.K.
	E-03	USA (Except for California)
	E-19	EU
	E-24	Australia
	E-28	Canada
	E-33	California (USA)
GSX-R1000UD	E-19	EU
GSX-R1000UF	E-19	EU

PERIODIC MAINTENANCE

2

CONTENTS

PERIODIC MAINTENANCE SCHEDULE 2- 2
PERIODIC MAINTENANCE CHART 2- 2
LUBRICATION POINTS 2- 3
MAINTENANCE AND TUNE-UP PROCEDURES 2- 4
AIR CLEANER 2- 4
SPARK PLUG 2- 4
VALVE CLEARANCE 2- 7
ENGINE OIL AND OIL FILTER 2-12
EXHAUST VALVE 2-13
FUEL HOSE 2-14
ENGINE IDLE SPEED 2-14
THROTTLE VALVE SYNCHRONIZATION 2-14
EVAPORATIVE EMISSION CONTROL SYSTEM (E-33 ONLY) ... 2-14
PAIR (AIR SUPPLY) SYSTEM 2-14
THROTTLE CABLE PLAY 2-15
CLUTCH 2-16
COOLING SYSTEM 2-17
DRIVE CHAIN 2-19
BRAKE 2-21
TIRE 2-24
STEERING 2-25
FRONT FORK 2-25
REAR SUSPENSION 2-25
EXHAUST PIPE BOLT AND NUT 2-26
CHASSIS BOLT AND NUT 2-27
COMPRESSION PRESSURE CHECK 2-29
OIL PRESSURE CHECK 2-30

PERIODIC MAINTENANCE SCHEDULE

The chart below lists the recommended intervals for all the required periodic service work necessary to keep the motorcycle operating at peak performance and economy. Maintenance intervals are expressed in terms of kilometer, miles and months, whichever comes first.

IMPORTANT (USA only):

The periodic maintenance intervals and service requirements have been established in accordance with EPA regulations. Following these instructions will ensure that the motorcycle will not exceed emission standards and it will also ensure the reliability and performance of the motorcycle. The chart below lists the recommended intervals for all the required periodic service work necessary to keep the motorcycle operating at peak performance and economy. Mileages are expressed in terms of kilometer, miles and time for your convenience.

NOTES:

More frequent servicing may be performed on motorcycles that are used under severe conditions.

PERIODIC MAINTENANCE CHART

Item \ Interval						
	km	1 000	6 000	12 000	18 000	24 000
	miles	600	4 000	7 500	11 000	15 000
	months	1	6	12	18	24
Air cleaner element		-	I	I	R	I
Spark plugs		-	I	R	I	R
Valve clearance		-	-	-	-	I
Exhaust valve		I	-	I	-	I
Engine oil		R	R	R	R	R
Engine oil filter		R	-	-	R	-
Fuel line		-	I	I	I	I
		Replace fuel hose every 4 years.				
Idle speed		I	I	I	I	I
Throttle valve synchronization		I (E-33 only)	-	I	-	I
Evaporative emission control system (E-33 only)		-	-	I	-	I
		Replace vapor hose every 4 years.				
PAIR (air supply) system		-	-	I	-	I
Throttle cable play		I	I	I	I	I
Clutch		-	I	I	I	I
Radiator hoses		-	I	I	I	I
Engine coolant		Replace every 2 years.				
Drive chain		I	I	I	I	I
		Clean and lubricate every 1 000 km (600 miles).				
Brakes		I	I	I	I	I
Brake hoses		-	I	I	I	I
		Replace every 4 years.				
Brake fluid		-	I	I	I	I
		Replace every 2 years.				
Tires		-	I	I	I	I
Steering		I	-	I	-	I
Front forks		-	-	I	-	I
Rear suspension		-	-	I	-	I
Exhaust pipe bolts and muffler bolt and nut		T	-	T	-	T
Chassis bolts and nuts		T	T	T	T	T

I = Inspect and adjust, clean, lubricate or replace as necessary.

R = Replace

T = Tighten

LUBRICATION POINTS

Proper lubrication is important for smooth operation and long life of each working part of the motorcycle. Major lubrication points are indicated below.

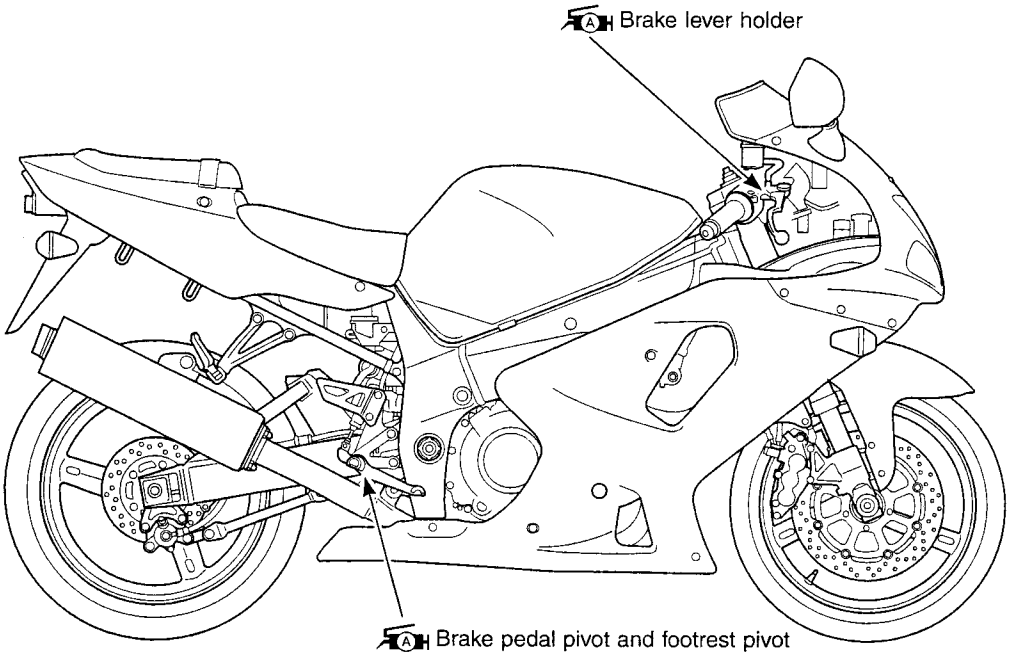

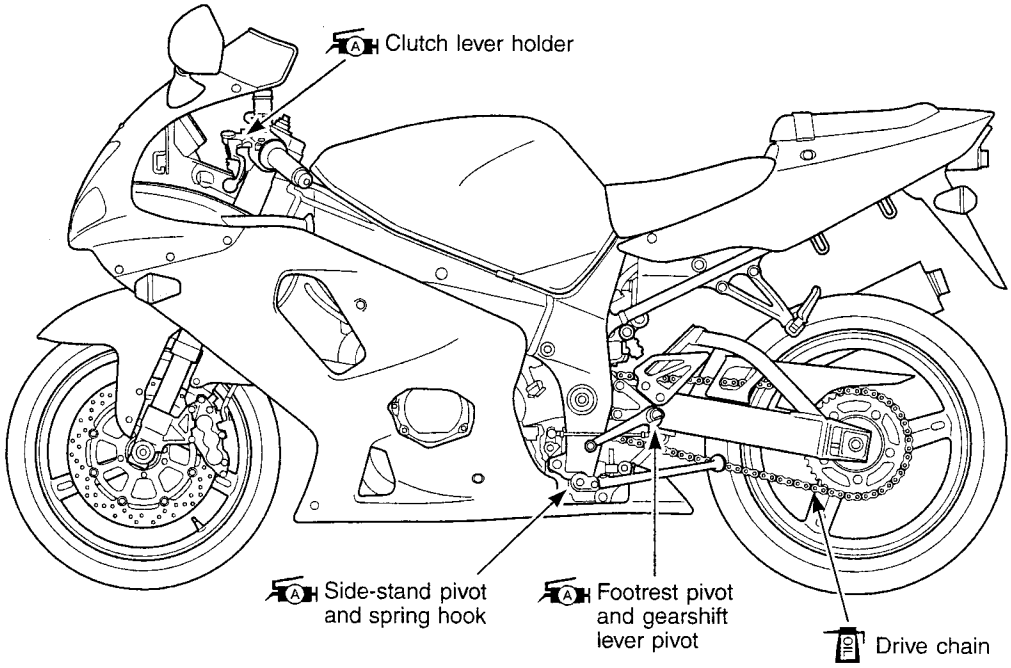

NOTE:

* *Before lubricating each part, clean off any rusty spots and wipe off any grease, oil, dirt or grime.*
* *Lubricate exposed parts which are subject to rust, with a rust preventative spray, especially whenever the motorcycle has been operated under wet or rainy conditions.*

MAINTENANCE AND TUNE-UP PROCEDURES

This section describes the servicing procedures for each item mentioned in the Periodic Maintenance chart.

AIR CLEANER

- Remove the front and rear seats. (☞ 6-6)
- Lift and support the fuel tank. (☞ 4-56)
- Remove the air cleaner element by removing the screws.

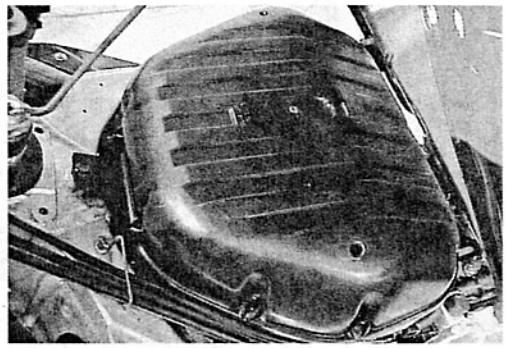

- Carefully use air hose to blow the dust from the cleaner element.

NOTE:

Always apply air pressure on the throttle body side of the air cleaner element. If air pressure is applied improperly, dirt will be forced into the pores of the air cleaner element thus restricting air flow through the air cleaner element.

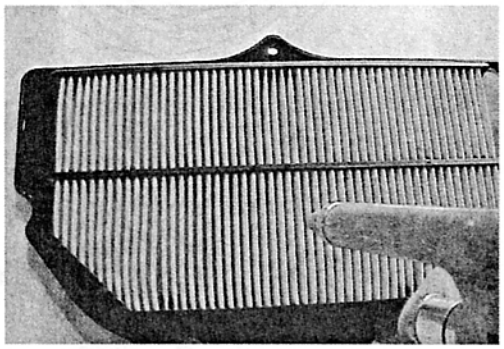

- Reinstall the cleaned or new air cleaner element in the reverse order of removal.

NOTE:

If driving under dusty conditions, clean the air cleaner element more frequently. Make sure that the air cleaner is in good condition at all times. The life of the engine depends largely on this component.

- Remove the drain plugs from the air cleaner box to allow any water to drain out.

SPARK PLUG

SPARK PLUG AND IGNITION COIL/PLUG CAP REMOVAL

- Remove the front and rear seat. (☞ 6-6)
- Lift and support the fuel tank. (☞ 4-56)
- Remove the air cleaner box. (☞ 4-66)

- Disconnect all lead wire couplers from ignition coil/plug caps.

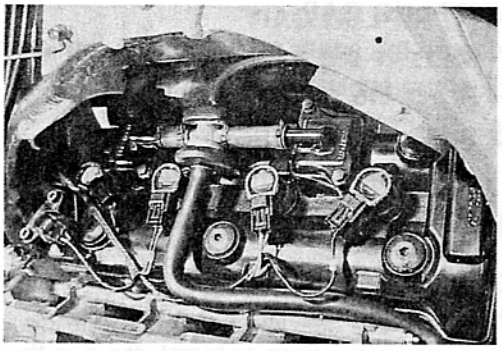

⚠ CAUTION

Disconnect the lead wire coupler before removing the ignition coil/plug cap to avoid lead wire coupler damage.

- Remove the ignition coils/plug caps.

⚠ CAUTION

*** Do not pry up the ignition coil/plug cap with a driver or a bar to avoid its damage.**
*** Be careful not to drop the ignition coil/plug cap to prevent short /open circuit.**

- Remove the spark plugs with a spark plug wrench.

HEAT RANGE

- Check spark plug heat range by observing electrode color. If the electrode of the spark plug is wet appearing or dark color, replace the spark plug with hotter type one. If it is white or glazed appearing, replace the spark plug with colder type one.

	NGK	DENSO
Hotter type	CR8E	U24ESR-N
Standard	CR9E	U27ESR-N
Colder type	CR10E	U31ESR-N

NOTE:
"R" type spark plug has a resistor located at the center electrode to prevent radio noise.

CARBON DEPOSITS

- Check carbon deposits on the spark plug.
- If carbon is deposited, remove it using a spark plug cleaner machine or carefully use a tool with a pointed end.

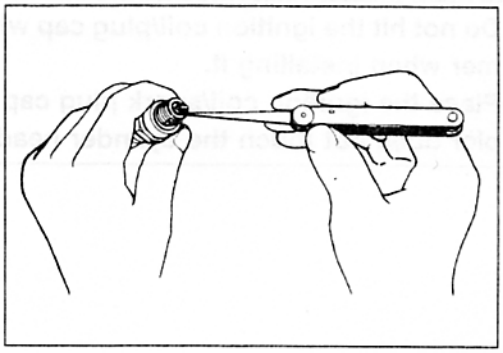

SPARK PLUG GAP

- Measure the spark plug gap with a thickness gauge.
- Adjust the spark plug gap if necessary.

DATA Spark plug gap:
Standard: 0.7 – 0.8 mm (0.028 – 0.031 in)

TOOL 09900-20803: Thickness gauge

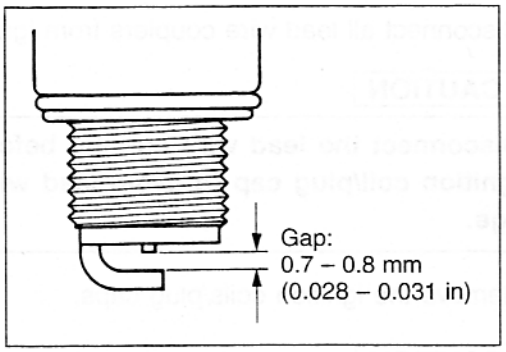

ELECTRODE'S CONDITION

- Check the condition of the electrode.
- If it is extremely worn or burnt, replace the spark plug. Replace the spark plug if it has a broken insulator, damaged thread, etc.

⚠ CAUTION

Check the thread size and reach when replacing the spark plug. If the reach is too short, carbon will be deposited on the screw portion of the spark plug hole and engine damage may result.

SPARK PLUG AND IGNITION COIL/PLUG CAP INSTALLATION

- Install the spark plugs to the cylinder head with fingers, and then tighten them to the specified torque with a wrench.

Spark plug: 11 N·m (1.1 kgf·m, 8.0 lb-ft)

⚠ CAUTION

Do not crossthread or over tighten the spark plug, or the spark plug will damage the aluminum threads of the cylinder head.

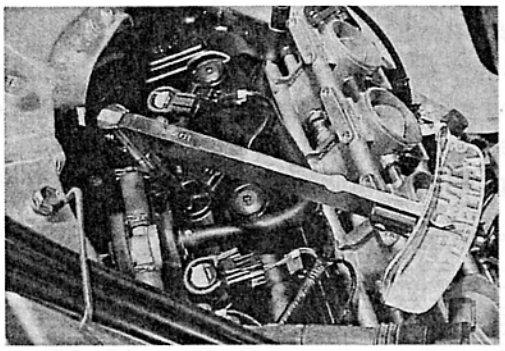

- Install the ignition coils/plug caps and connect their lead wire couplers.

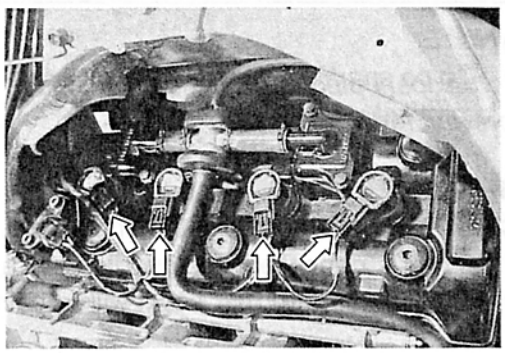

⚠ CAUTION

*** Do not hit the ignition coil/plug cap with a plastic hammer when installing it.**
*** Place the ignition coil/spark plug cap so that the coupler does not touch the cylinder head cover.**

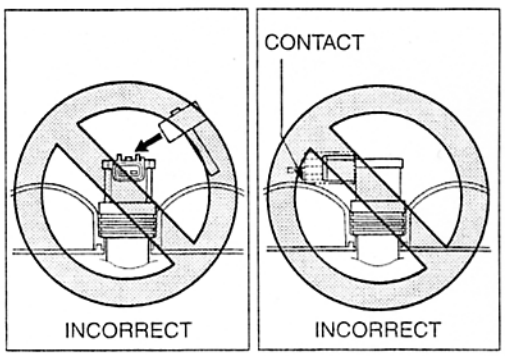

VALVE CLEARANCE

- Remove the right under cowling. (☞ 6-3)
- Remove the front and rear seats. (☞ 6-6)
- Lift and support the fuel tank. (☞ 4-66)
- Remove the spark plugs. (☞ 2-4)
- Remove the throttle body. (☞ 4-67)
- Remove the cylinder head covers. (☞ 3-16)

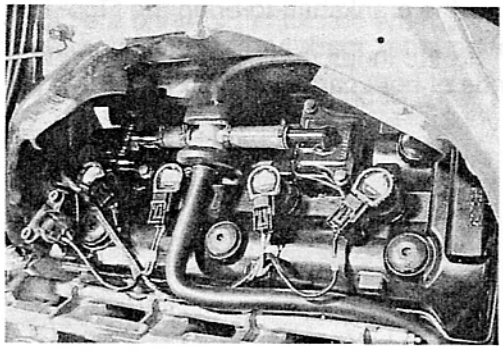

The valve clearance specification is different for intake and exhaust valves. Valve clearance must be checked and adjusted, 1) at the time of periodic inspection, 2) when the valve mechanism is serviced, and 3) when the camshafts are removed for servicing.

DATA **Valve clearance (when cold):**
Standard: IN. : 0.10 – 0.20 mm (0.004 – 0.008 in)
EX.: 0.20 – 0.30 mm (0.008 – 0.012 in)

NOTE:

* *The cam must be at positions, Ⓐ or Ⓑ, in order to check the valve clearance, or to adjust valve clearance. Clearance readings should not be taken with the cam in any other position than these two positions.*
* *The clearance specification is for COLD state.*
* *To turn the crankshaft for clearance checking, be sure to use a wrench, and rotate in the normal running direction. All spark plugs should be removed.*

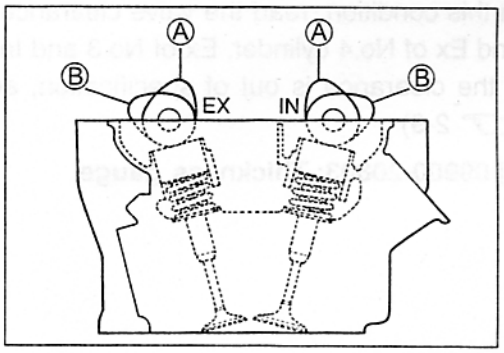

- Remove the valve timing inspection cap ①.

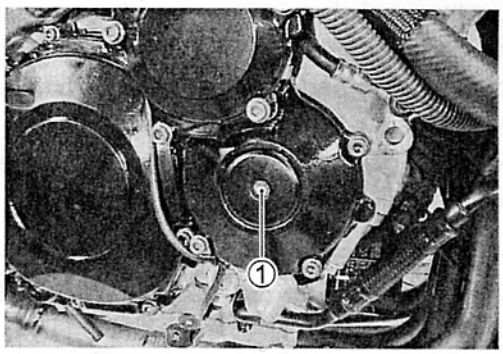

- Turn the crankshaft to bring the "Top" line on the starter clutch to the index mark and also to bring the notches Ⓐ on the left ends of both camshafts (Ex and In) to the positions as shown.

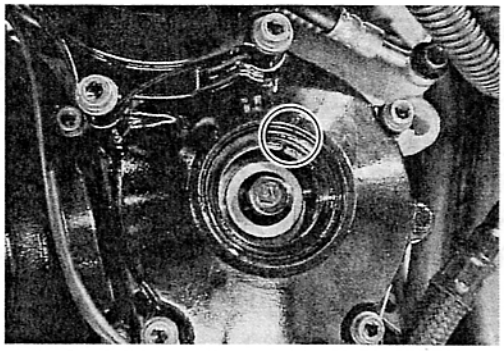

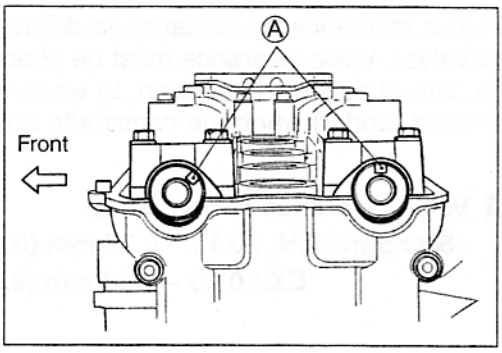

- In this condition, read the valve clearance at the valves Ⓑ (In and Ex of No.4 cylinder, Ex of No.3 and In of No.2).
- If the clearance is out of specification, adjust the clearance. (☞ 2-9)

TOOL **09900-20803: Thickness gauge**

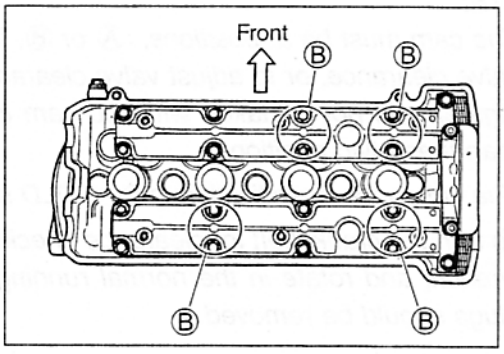

- Turn the crankshaft 360 degrees (one rotation) to bring the "TOP" line on the starter clutch to the index mark of valve timing inspection hole and also to bring the notches Ⓐ to the position as shown.
- Read the clearance at the remaining valves Ⓒ and adjust the clearance if necessary. (☞ 2-9)

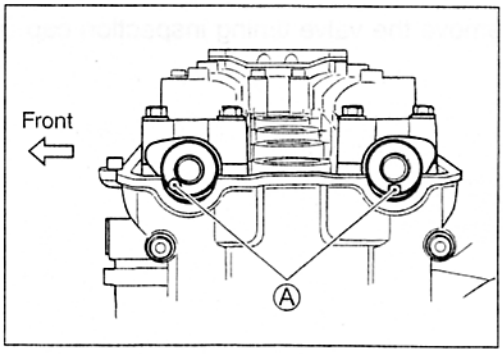

Cam position	Notch Ⓐ position	
	Exhaust Camshaft	Intake Camshaft
Ⓑ	←Front	←Front
Ⓒ	←Front	←Front

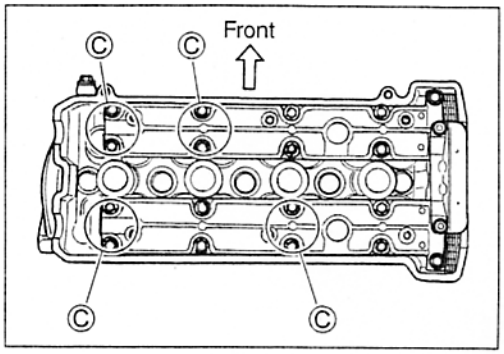

VALVE CLEARANCE ADJUSTMENT

The clearance is adjusted by replacing the existing tappet shim by a thicker or thinner shim.

- Remove the intake or exhaust camshafts. (☞ 3-18)
- Remove the tappet and shim by fingers or magnetic hand.
- Check the figures printed on the shim. These figures indicate the thickness of the shim, as illustrated.
- Select a replacement shim that will provide a clearance within the specified range. For the purpose of this adjustment, a total of 25 sizes of tappet shim are available ranging from 1.20 to 2.20 mm in steps of 0.05 mm. Fit the selected shim to the valve stem end, with numbers toward tappet. Be sure to check shim size with micrometer to ensure its size. Refer to the tappet shim selection table (☞2-10, 2-11) for details.

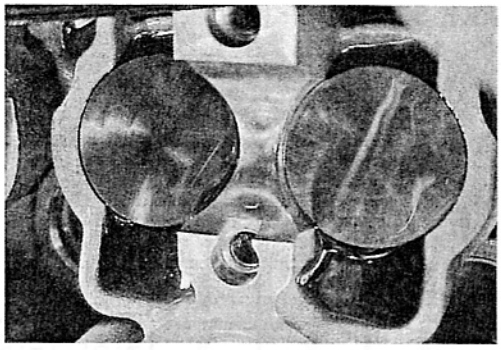

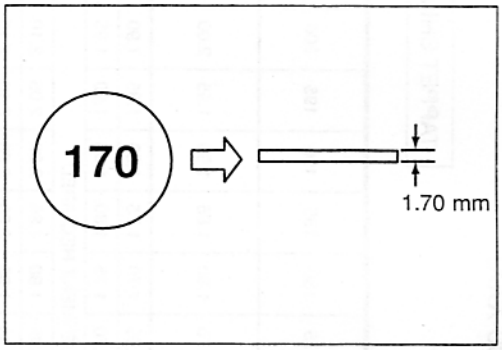

NOTE:

* *Be sure to apply engine oil to tappet shim top and bottom faces.*

* *When seating the tappet shim, be sure to face figure printed surface to the tappet.*

NOTE:

Reinstall the camshafts as the specified manner. (☞ 3-92)

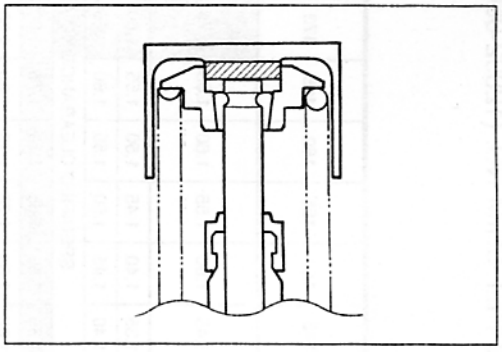

- After replacing the tappet shim and camshafts, rotate the engine so that the tappet is depressed fully. This will squeeze out oil trapped between the shim and the tappet that could cause an incorrect measurement. Then check the clearance again to confirm that it is within the specified range.

- After finishing the valve clearance adjustment, reinstall the following items.

	Page
* Cylinder head cover	3-97
* Spark plug and plug cap	2-7
* Valve timing inspection plug	3-97

TAPPET SHIM SELECTION TABLE [INTAKE]
TAPPET SHIM NO. (12892-05C00-XXX)

TAPPET SHIM SET (12800-05820)

MEASURED VALVE CLEARANCE (mm) \ SUFFIX NO.	120	125	130	135	140	145	150	155	160	165	170	175	180	185	190	195	200	205	210	215	220
PRESENT SHIM SIZE (mm)	1.20	1.25	1.30	1.35	1.40	1.45	1.50	1.55	1.60	1.65	1.70	1.75	1.80	1.85	1.90	1.95	2.00	2.05	2.10	2.15	2.20
0.00-0.04			1.20	1.25	1.30	1.35	1.40	1.45	1.50	1.55	1.60	1.65	1.70	1.75	1.80	1.85	1.90	1.95	2.00	2.05	2.10
0.05-0.09		1.20	1.25	1.30	1.35	1.40	1.45	1.50	1.55	1.60	1.65	1.70	1.75	1.80	1.85	1.90	1.95	2.00	2.05	2.10	2.15
0.10-0.20	SPECIFIED CLEARANCE/NO ADJUSTMENT REQUIRED																				
0.21-0.25	1.30	1.35	1.40	1.45	1.50	1.55	1.60	1.65	1.70	1.75	1.80	1.85	1.90	1.95	2.00	2.05	2.10	2.15	2.20	2.20	
0.26-0.30	1.35	1.40	1.45	1.50	1.55	1.60	1.65	1.70	1.75	1.80	1.85	1.90	1.95	2.00	2.05	2.10	2.15	2.20			
0.31-0.35	1.40	1.45	1.50	1.55	1.60	1.65	1.70	1.75	1.80	1.85	1.90	1.95	2.00	2.05	2.10	2.15	2.20				
0.36-0.40	1.45	1.50	1.55	1.60	1.65	1.70	1.75	1.80	1.85	1.90	1.95	2.00	2.05	2.10	2.15	2.20					
0.41-0.45	1.50	1.55	1.60	1.65	1.70	1.75	1.80	1.85	1.90	1.95	2.00	2.05	2.10	2.15	2.20						
0.46-0.50	1.55	1.60	1.65	1.70	1.75	1.80	1.85	1.90	1.95	2.00	2.05	2.10	2.15	2.20							
0.51-0.55	1.60	1.65	1.70	1.75	1.80	1.85	1.90	1.95	2.00	2.05	2.10	2.15	2.20								
0.56-0.60	1.65	1.70	1.75	1.80	1.85	1.90	1.95	2.00	2.05	2.10	2.15	2.20									
0.61-0.65	1.70	1.75	1.80	1.85	1.90	1.95	2.00	2.05	2.10	2.15	2.20										
0.66-0.70	1.75	1.80	1.85	1.90	1.95	2.00	2.05	2.10	2.15	2.20											
0.71-0.75	1.80	1.85	1.90	1.95	2.00	2.05	2.10	2.15	2.20												
0.76-0.80	1.85	1.90	1.95	2.00	2.05	2.10	2.15	2.20													
0.81-0.85	1.90	1.95	2.00	2.05	2.10	2.15	2.20														
0.86-0.90	1.95	2.00	2.05	2.10	2.15	2.20															
0.91-0.95	2.00	2.05	2.10	2.15	2.20																
0.96-1.00	2.05	2.10	2.15	2.20																	
1.01-1.05	2.10	2.15	2.20																		
1.06-1.10	2.15	2.20																			
1.11-1.15	2.20																				

HOW TO USE THIS CHART:

I. Measure valve clearance. "ENGINE IS COLD"

II. Measure present shim size.

III. Match clearance in vertical column with present shim size in horizontal column.

EXAMPLE

Valve clearance is	0.23 mm
Present shim size	1.70 mm
Shim size to be used	1.80 mm

TAPPET SHIM SELECTION TABLE [EXHAUST]
TAPPET SHIM NO. (12892-05C00-XXX)

TAPPET SHIM SET (12800-05820)

MEASURED VALVE CLEARANCE (mm) \ SUFFIX NO.	120	125	130	135	140	145	150	155	160	165	170	175	180	185	190	195	200	205	210	215	220
PRESENT SHIM SIZE (mm)	1.20	1.25	1.30	1.35	1.40	1.45	1.50	1.55	1.60	1.65	1.70	1.75	1.80	1.85	1.90	1.95	2.00	2.05	2.10	2.15	2.20
0.05-0.09				1.20	1.25	1.30	1.35	1.40	1.45	1.50	1.55	1.60	1.65	1.70	1.75	1.80	1.85	1.90	1.95	2.00	2.05
0.10-0.14			1.20	1.25	1.30	1.35	1.40	1.45	1.50	1.55	1.60	1.65	1.70	1.75	1.80	1.85	1.90	1.95	2.00	2.05	2.10
0.15-0.19		1.20	1.25	1.30	1.35	1.40	1.45	1.50	1.55	1.60	1.65	1.70	1.75	1.80	1.85	1.90	1.95	2.00	2.05	2.10	2.15
0.20-0.30	SPECIFIED CLEARANCE/NO ADJUSTMENT REQUIRED																				
0.31-0.35	1.30	1.35	1.40	1.45	1.50	1.55	1.60	1.65	1.70	1.75	1.80	1.85	1.90	1.95	2.00	2.05	2.10	2.15	2.20	2.20	
0.36-0.40	1.35	1.40	1.45	1.50	1.55	1.60	1.65	1.70	1.75	1.80	1.85	1.90	1.95	2.00	2.05	2.10	2.15	2.20			
0.41-0.45	1.40	1.45	1.50	1.55	1.60	1.65	1.70	1.75	1.80	1.85	1.90	1.95	2.00	2.05	2.10	2.15	2.20				
0.46-0.50	1.45	1.50	1.55	1.60	1.65	1.70	1.75	1.80	1.85	1.90	1.95	2.00	2.05	2.10	2.15	2.20					
0.51-0.55	1.50	1.55	1.60	1.65	1.70	1.75	1.80	1.85	1.90	1.95	2.00	2.05	2.10	2.15	2.20						
0.56-0.60	1.55	1.60	1.65	1.70	1.75	1.80	1.85	1.90	1.95	2.00	2.05	2.10	2.15	2.20							
0.61-0.65	1.60	1.65	1.70	1.75	1.80	1.85	1.90	1.95	2.00	2.05	2.10	2.15	2.20								
0.66-0.70	1.65	1.70	1.75	1.80	1.85	1.90	1.95	2.00	2.05	2.10	2.15	2.20									
0.71-0.75	1.70	1.75	1.80	1.85	1.90	1.95	2.00	2.05	2.10	2.15	2.20										
0.76-0.80	1.75	1.80	1.85	1.90	1.95	2.00	2.05	2.10	2.15	2.20											
0.81-0.85	1.80	1.85	1.90	1.95	2.00	2.05	2.10	2.15	2.20												
0.86-0.90	1.85	1.90	1.95	2.00	2.05	2.10	2.15	2.20													
0.91-0.95	1.90	1.95	2.00	2.05	2.10	2.15	2.20														
0.96-1.00	1.95	2.00	2.05	2.10	2.15	2.20															
1.01-1.05	2.00	2.05	2.10	2.15	2.20																
1.06-1.10	2.05	2.10	2.15	2.20																	
1.11-1.15	2.10	2.15	2.20																		
1.16-1.20	2.15	2.20																			
1.21-1.25	2.20																				

HOW TO USE THIS CHART:

I. Measure valve clearance. "ENGINE IS COLD"

II. Measure present shim size.

III. Match clearance in vertical column with present shim size in horizontal column.

EXAMPLE

Valve clearance is	0.33 mm
Present shim size	1.70 mm
Shim size to be used	1.80 mm

ENGINE OIL AND OIL FILTER

Changed oil while the engine is warm. Oil filter should be replaced together with the engine oil at the initial 1 000 km (600 miles, 1 month) and every 18 000 km (11 000 miles, 18 months).

ENGINE OIL REPLACEMENT

- Keep the motorcycle upright.
- Place an oil pan below the engine, and drain oil by removing the oil drain plug ① and filler cap ②.

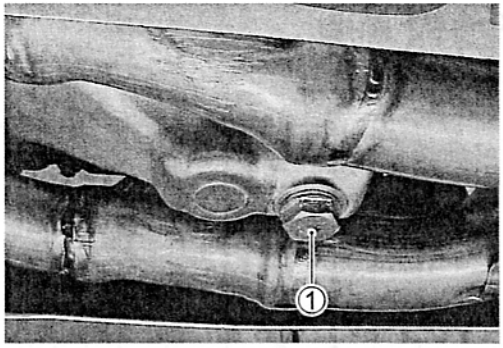

- Tighten the drain plug ① to the specified torque, and pour fresh oil through the oil filler. The engine will hold about 2.8 L (3.0/2.5 US/Imp qt) of oil. Use an API classification of SF or SG oil with SAE 10W/40 viscosity.

Oil drain plug: 23 N·m (2.3 kgf·m, 16.5 lb-ft)

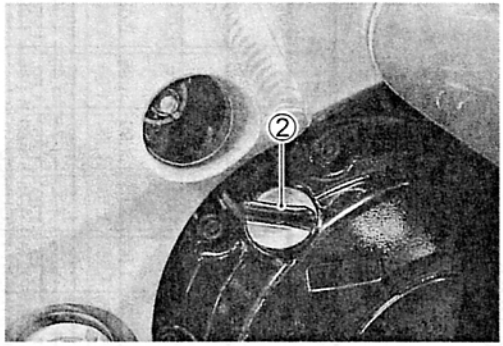

- Start up the engine and allow it to run for several minutes at idling speed.
- Turn off the engine and wait about three minutes, then check the oil level through the inspection window. If the level is below mark "L", add oil to "F" level. If the level is above mark "F", drain oil to "F" level.

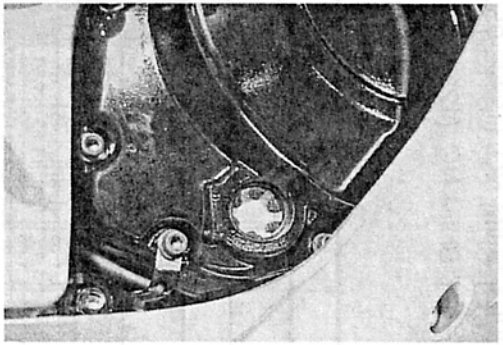

OIL FILTER REPLACEMENT

- Drain the engine oil as described in the engine oil replacement procedure.
- Remove the oil filter ① with the special tool.

TOOL 09915-40610: Oil filter wrench

- Apply engine oil lightly to the gasket of the new oil filter before installation.

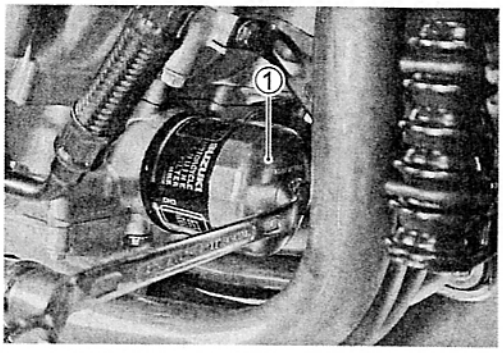

- Install the new oil filter. Turn it by hand until you feel that the oil filter gasket contacts the oil filter mounting surface. Then, tighten the oil filter two full turns with the special tool.

NOTE:
To properly tighten the oil filter, use the special tool. Never tighten the oil filter by hand.

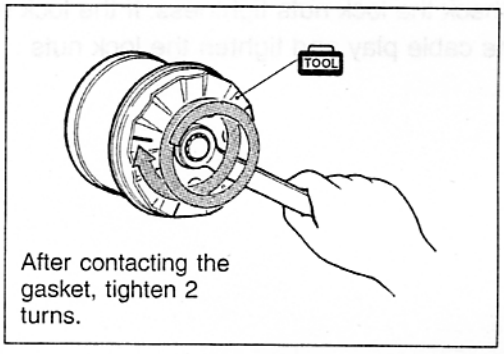

After contacting the gasket, tighten 2 turns.

- Add new engine oil and check the oil level as described in the engine oil replacement procedure.

DATA NECESSARY AMOUNT OF ENGINE OIL:
Oil change: 3.0L (3.2/2.6 US/Imp qt)
Oil and filter change: 3.3L (3.5/2.9 US/Imp qt)
Engine overhaul: 3.6L (3.8/3.2 US/Imp qt)

⚠ CAUTION

ONLY USE A GENUINE SUZUKI MOTORCYCLE OIL FILTER. Other manufacturer's oil filters may differ in thread specifications (thread diameter and pitch), filtering performance and durability which may lead to engine damage or oil leaks. Also, do not use a genuine Suzuki automobile oil filter on this motorcycle.

EXHAUST CONTROL VALVE

Check the exhaust control valve actuator for its movement when the ignition switch is turned on. If the exhaust valve actuator does not move, check exhaust valve actuator electrical circuit and exhaust valve carbon stick. Check the exhaust control cable play. (☞4-83, -84, -85 and -86)

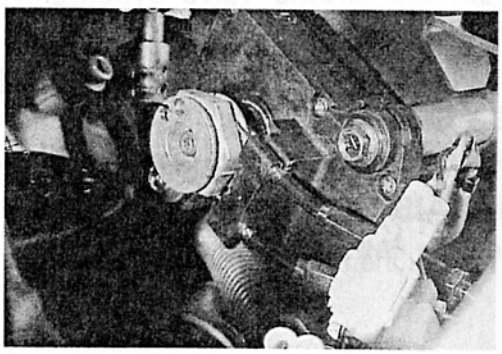

- Remove the two bolts and cover.

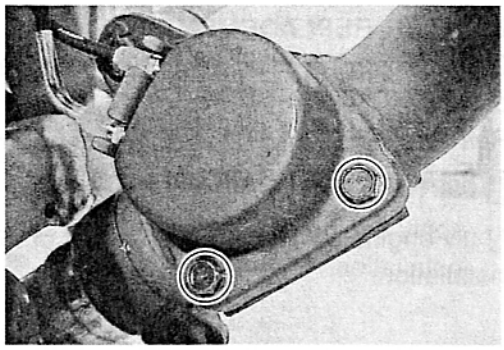

- Check the lock nuts tightness. If the lock nuts are loose, adjust the cable play and tighten the lock nuts .

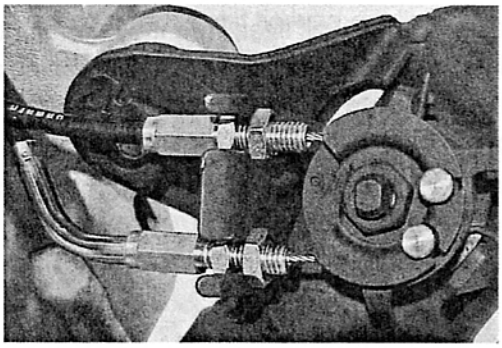

FUEL HOSE

Inspect the fuel hose ① for damage and fuel leakage. If any defects are found, replace the fuel hose.

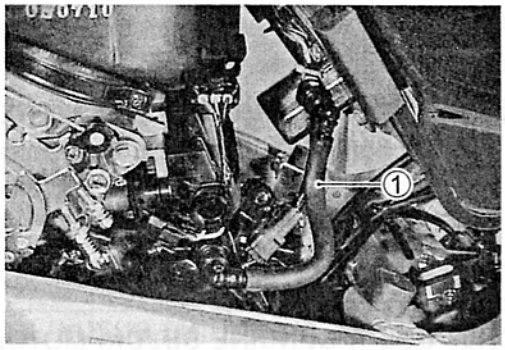

ENGINE IDLE SPEED

NOTE:
Warm up the engine before adjusting the engine idle speed.

- Start the engine, turn the throttle stop screw and set the engine idle speed as follows.

DATA **Engine idle speed: 1 150 ± 100 rpm**

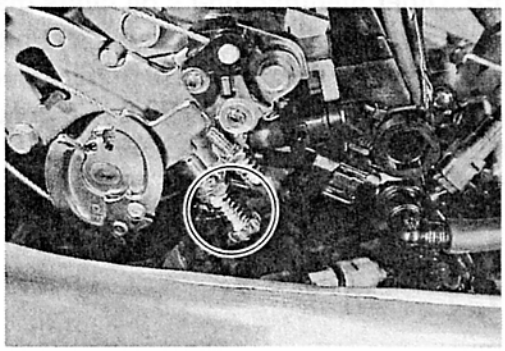

THROTTLE VALVE SYNCHRONIZATION

Inspect the throttle valve synchronization periodically. (☞4-75)

EVAPORATIVE EMISSION CONTROL SYSTEM (E-33 ONLY)

Inspect the evaporative emission control system periodically.

PAIR (AIR SUPPLY) SYSTEM

Inspect the PAIR (air supply) system periodically. (☞3-29)

THROTTLE CABLE PLAY

Adjust the throttle cable play Ⓐ as follows.

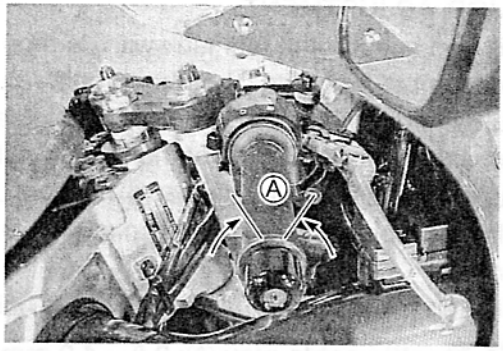

MINOR ADJUSTMENT

1st step:

- Loosen the lock nut ① of the throttle returning cable ② and fully turn in the adjuster ③.

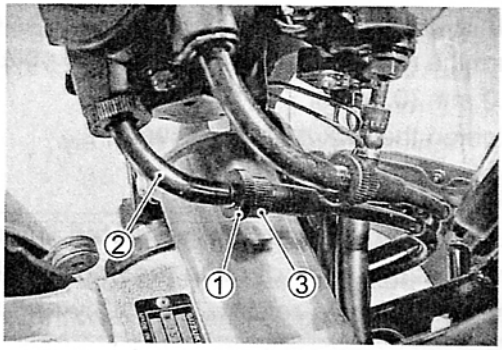

2nd step:

- Loosen the lock nut ④ of the throttle pulling cable ⑤.
- Turn the adjuster ⑥ in or out until the throttle cable play (at the throttle grip) Ⓐ is between 2.0 – 4.0 mm (0.08 – 0.16 in).
- Tighten the locknut ④ while holding the adjuster ⑥.

DATA Throttle cable play Ⓐ: 2.0 – 4.0 mm (0.08 – 0.16 in)

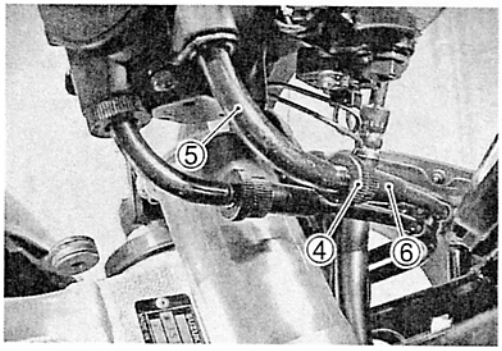

3rd step:

- While holding the throttle grip at the fully closed position, slowly turn out the adjuster ③ of the throttle returning cable ② until resistance is felt.
- Tighten the locknut ① while holding the adjuster ③.

⚠ WARNING

After the adjustment is completed, check that handlebar movement does not raise the engine idle speed and that the throttle grip returns smoothly and automatically.

NOTE:

Major adjustment can be made at the throttle body side adjuster.

MAJOR ADJUSTMENT

- Lift and support the fuel tank with its prop stay. (☞ 4-56)
- Loosen the lock nuts ① of the throttle returning cable ②.
- Turn the returning cable adjuster ③ to obtain proper cable play.
- Loosen the lock nuts ④ of the throttle pulling cable ⑤.
- Turn the pulling cable adjuster ⑥ in or out until the throttle cable play Ⓐ should be 2.0 – 4.0 mm (0.08 – 0.16 in) at the throttle grip.
- Tighten the lock nuts ④ securely while holding the adjuster ⑥.

DATA **Throttle cable play Ⓐ: 2.0 – 4.0 mm (0.08 – 0.16 in)**

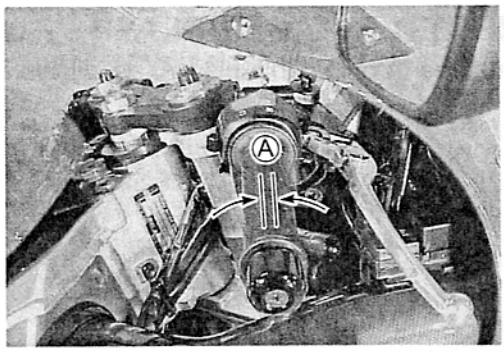

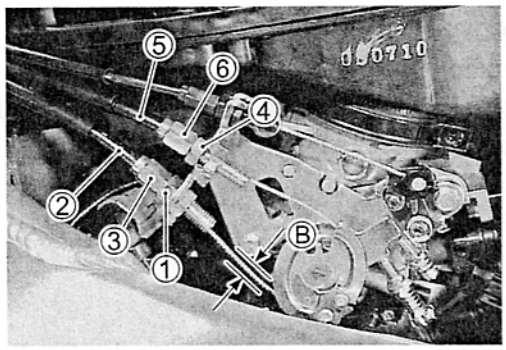

- While holding the throttle grip at the fully closed position, slowly turn the returning cable adjuster ③ to obtain a cable slack Ⓑ of 1.0 mm (0.04 in).
- Tighten the lock nuts ① securely.

⚠ WARNING

After the adjustment is completed, check that handlebar movement does not raise the engine idle speed and that the throttle grip returns smoothly and automatically.

CLUTCH

- Remove the left under cowling. (☞ 6-3)
- Turn in the adjuster ① all the way into the clutch lever assembly.
- Remove the clutch release cover.
- Loosen the lock nut ② and turn out the adjusting screw ③ two or three rotations.
- From that position, slowly turn in the adjusting screw ③ to feel resistance.
- From this position, turn out the adjusting screw ③ ¼ rotations, and tighten the lock nut ②.
- Loosen the lock nut ④, and turn the cable adjuster ⑤ to obtain 10 – 15 mm (0.4 – 0.6 in) of free play Ⓐ at the clutch lever end.
- Tighten the lock nuts ④.

DATA **Clutch lever play Ⓐ: 10 – 15 mm (0.4 – 0.6 in)**
Clutch release screw: ¼ turns out

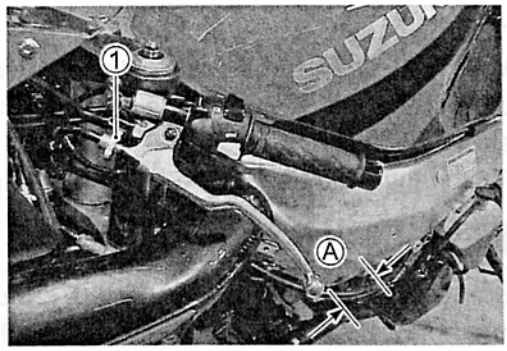

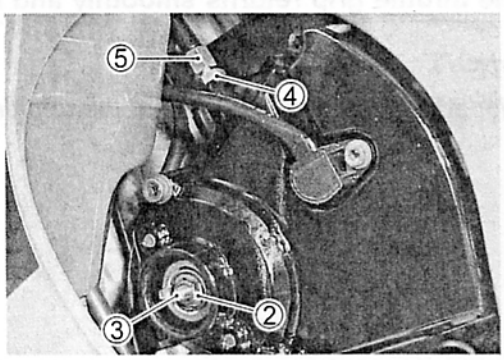

COOLING SYSTEM

ENGINE COOLANT LEVEL CHECK

- Keep the motorcycle upright.
- Check the engine coolant level by observing the full and lower lines on the engine coolant reservoir.

  Ⓐ Full line Ⓑ Lower line

- If the level is below the lower line, remove the left under cowling (☞6-3), and add engine coolant to the full line from the engine coolant reservoir filler.

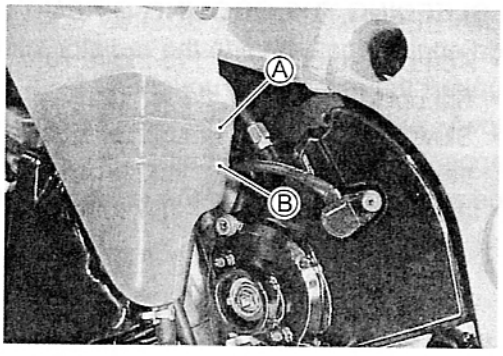

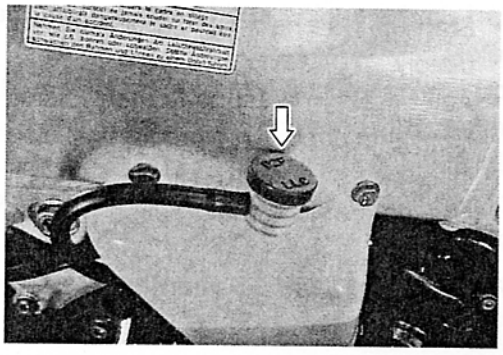

ENGINE COOLANT CHANGE

- Remove the under cowling. (☞6-3)
- Remove the radiator cap ①.
- Drain engine coolant by disconnecting the radiator hose ② from the pump.

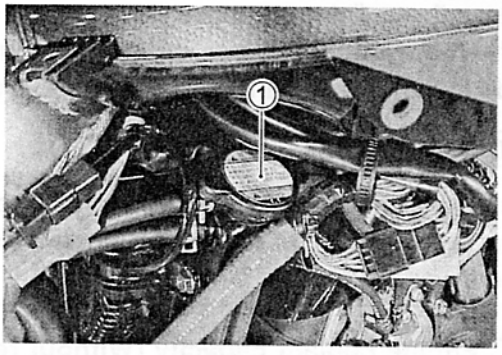

⚠ WARNING

*** Do not open the radiator cap when the engine is hot, as you may be injured by escaping hot liquid or vapor.**
*** Engine coolant may be harmful if swallowed or if it comes in contact with skin or eyes. If engine coolant gets into the eyes or in contact with the skin, flush thoroughly with plenty of water. If swallowed, induce vomiting and call physician immediately!**

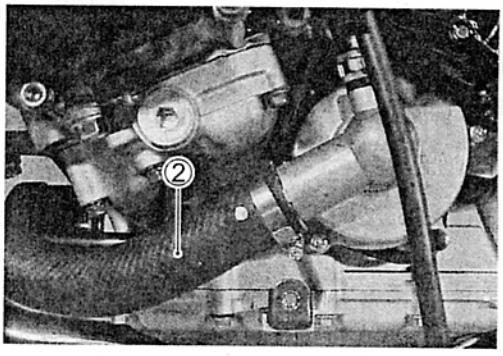

- Flush the radiator with fresh water if necessary.
- Connect the radiator hose ② securely.
- Pour the specified engine coolant up to the radiator inlet.

LLC Engine coolant capacity (without reservoir):
2 150 ml (2.3/1.9 Us/Imp qt)

- Bleed the air from the engine coolant circuit as following procedure. (☞2-17)

ENGINE COOLANT INFORMATION: ☞5-2

AIR BLEEDING THE COOLING CIRCUIT

- Add engine coolant up to the radiator inlet.
- Support the motorcycle upright.
- Slowly swing the motorcycle, right and left, to bleed the air trapped in the cooling circuit.
- Add engine coolant up to the radiator inlet.

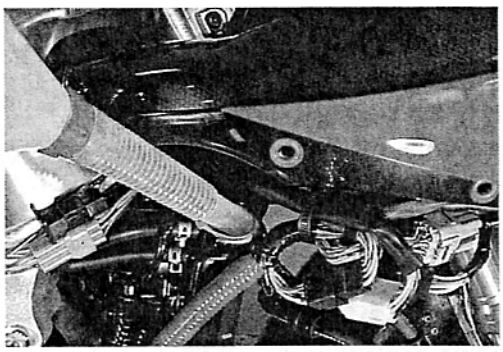

- Start up the engine and bleed air from the radiator inlet completely.
- Add engine coolant up to the radiator inlet.
- Repeat the above procedure until bleed no air from the radiator inlet.
- Loosen the air bleeding bolt ① and check the engine coolant flow out.

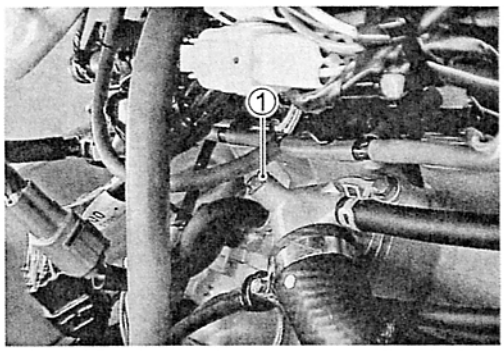

Air bleeding bolt: 5.5 N·m (0.55 kgf·m, 4.0 lb-ft)

- Close the radiator cap securely.
- After warming up and cooling down the engine several times, add the engine coolant up to the full level of the reservoir.

⚠ CAUTION

Repeat the above procedure several times and make sure that the radiator is filled with engine coolant up to the reservoir full level.

LLC Engine coolant capacity (Without reservoir): 2 150 ml (2.3/1.9 US/Imp qt)

RADIATOR HOSES

- Remove the under cowlings. (☞ 6-3)
- Check to see the radiator hoses for crack, damage or engine coolant leakage.
- If any defects are found, replace the radiator hoses with new ones.

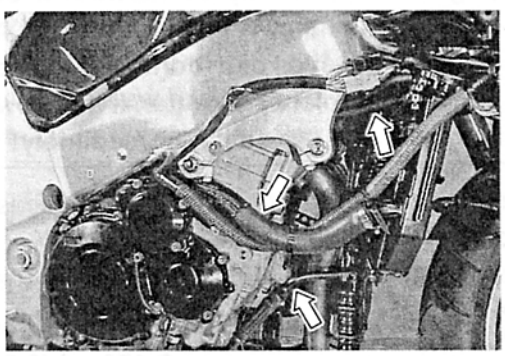

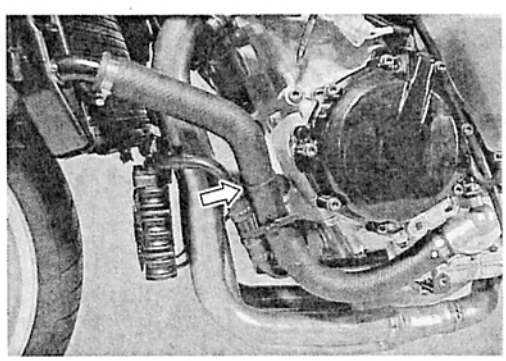

DRIVE CHAIN

Visually check the drive chain for the possible defects listed below. (Support the motorcycle by a jack and a wooden block, turn the rear wheel slowly by hand with the transmission shifted to Neutral.)

* Loose pins
* Excessive wear
* Damaged rollers
* Improper chain adjustment
* Dry or rusted links
* Missing O-ring seals
* Kinked or binding links

If any defects are found, the drive chain must be replaced.

NOTE:
When replacing the drive chain, replace the drive chain and sprockets as a set.

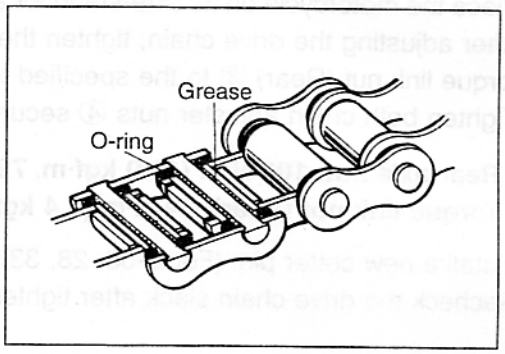

CHECKING

- Remove the axle cotter pin. (For E-03, 28 and 33)
- Loosen the axle nut ①.
- Loosen the chain adjuster lock nuts ②.
- Loosen the torque link nut (Rear) ③.
- Tense the drive chain fully by turning both chain adjusters ④.

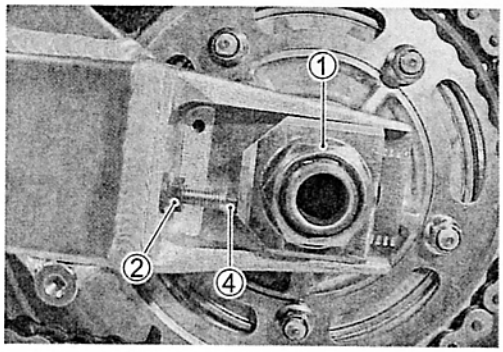

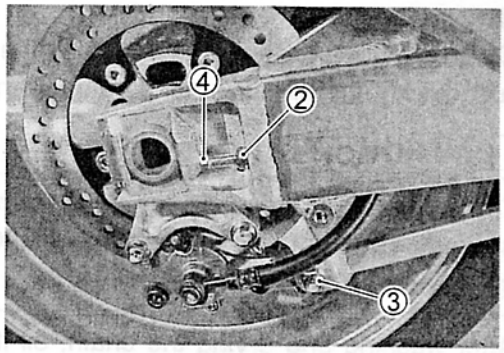

- Count out 21 pins (20 pitches) on the chain and measure the distance between the two points. If the distance exceeds the service limit, the chain must be replaced.

DATA **Drive chain 20-pitch length:**
Service limit: 319.4 mm (12.57 in)

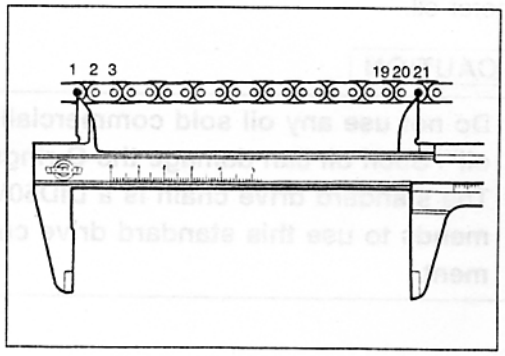

ADJUSTING

- Loosen or tighten both chain adjuster nuts ① until there is 20 – 30 mm (0.8 – 1.2 in) of slack at the middle of the chain between the engine and rear sprockets as shown. The reference marks Ⓐ on both sides of the swingarm and the edge of each chain adjuster must be aligned to ensure that the front and rear wheels are correctly aligned.

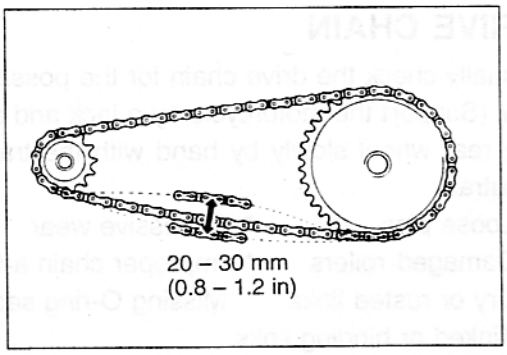

DATA Drive chain slack:
Standard: 20 – 30 mm (0.8 – 1.2 in)

- Place the motorcycle on its side-stand for accurate adjustment.
- After adjusting the drive chain, tighten the axle nut ② and the torque link nut (Rear) ③ to the specified torque.
- Tighten both chain adjuster nuts ④ securely.

Rear axle nut: 100 N·m (10.0 kgf·m, 72.5 lb-ft)
Torque link nut (Rear): 34 N·m (3.4 kgf·m, 24.6 lb-ft)

- Install a new cotter pin. (For E-03, 28, 33)
- Recheck the drive chain slack after tightening the axle nut.

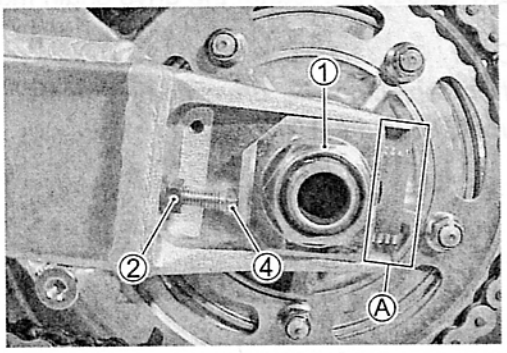

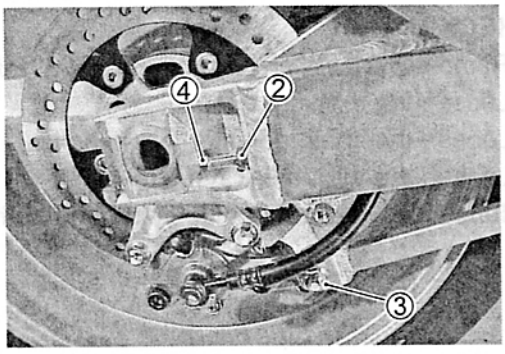

CLEANING AND LUBRICATING

- Clean the drive chain with kerosine. If the drive chain tends to rust quickly, the intervals must be shortened.

⚠ CAUTION

Do not use trichloroethylene, gasoline or any similar solvent. These fluids will damage the O-rings. Use only kerosine to clean the drive chain.

- After washing and drying the chain, oil it with a heavyweight motor oil.

⚠ CAUTION

*** Do not use any oil sold commercially as "drive chain oil". Such oil can damage the O-rings.**
*** The standard drive chain is a DID50V4 Suzuki recommends to use this standard drive chain as a replacement.**

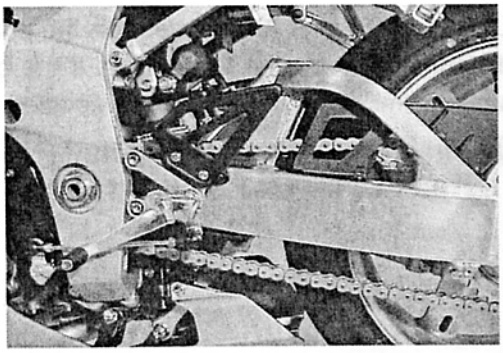

BRAKE

BRAKE FLUID LEVEL CHECK

- Keep the motorcycle upright and place the handlebars straight.
- Check the brake fluid level by observing the lower limit lines on the front and rear brake fluid reservoirs.
- When the level is below the lower limit line, replenish with brake fluid that meets the following specification.

Specification and Classification: DOT 4

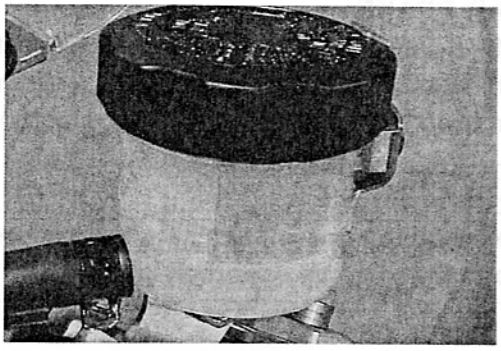

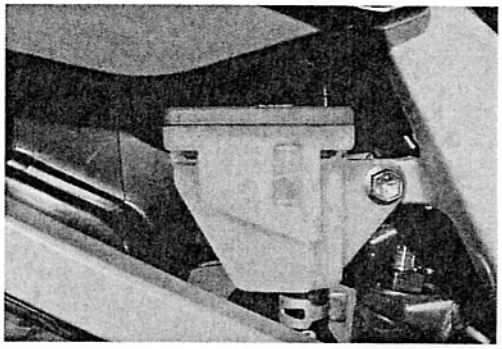

⚠ WARNING

*** The brake system of this motorcycle is filled with a glycol-based brake fluid. Do not use or mix different types of fluid such as silicone-based and petroleum-based fluids. Do not use any brake fluid taken from old, used or unsealed containers. Never re-use brake fluid left over from the last servicing or stored for a long period of time.**

*** Brake fluid, if it leaks, will interfere with safe running and immediately discolor painted surfaces. Check the brake hoses and hose joints for cracks and fluid leakage before riding.**

BRAKE PADS

FRONT BRAKE

- The extent of brake pad wear can be checked by observing the grooved limit line Ⓐ on the pad. When the wear exceeds the grooved limit line, replace the pads with new ones. (☞6-54)

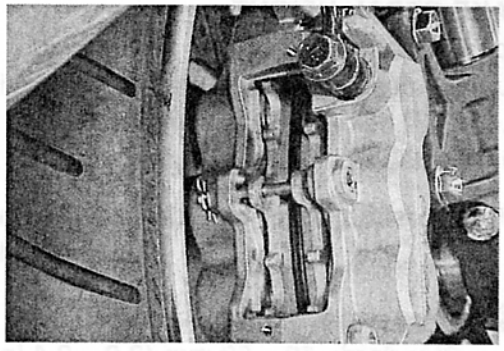

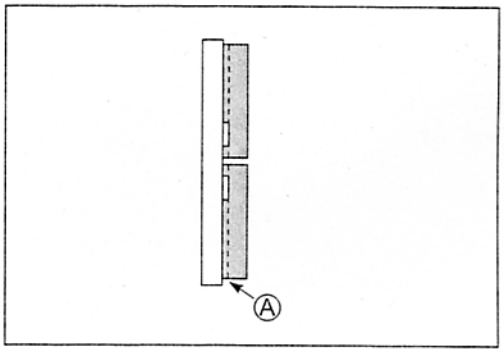

⚠ CAUTION

Replace the brake pads as a set, otherwise braking performance will be adversely affected.

REAR BRAKE

- The extent of brake pad wear can be checked by observing the grooved limit line Ⓐ on the pad. When the wear exceeds the grooved limit line, replace the pads with new ones. (☞6-62)

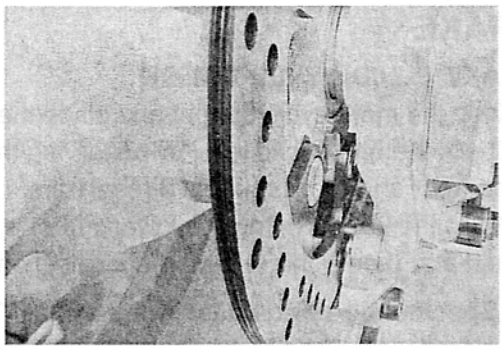

⚠ CAUTION

Replace the brake pads as a set, otherwise braking performance will be adversely affected.

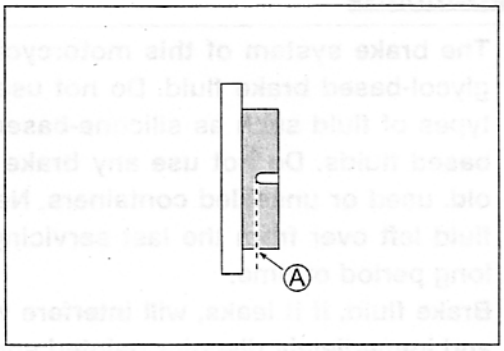

BRAKE PEDAL HEIGHT

- Loosen the lock nut ①.
- Turn the push rod ② until the brake pedal is 50 – 60 mm (2.0 – 2.4 in) Ⓐ below the top of the footrest.
- Tighten the lock nut ① securely.

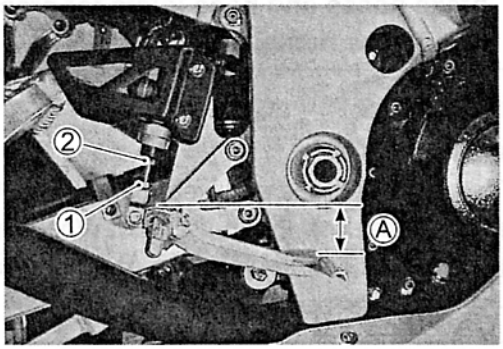

Rear brake master cylinder rod lock nut:
18 N·m (1.8 kgf·m, 13.0 lb-ft)

DATA Brake pedal height Ⓐ:
Standard: 50 – 60 mm (2.0 – 2.4 in)

BRAKE LIGHT SWITCH

- Adjust the rear brake light switch so that the brake light will come on just before pressure is felt when the brake pedal is depressed.

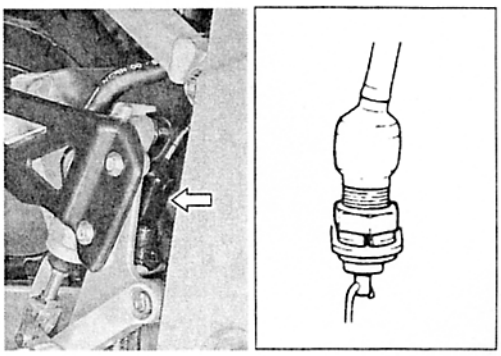

AIR BLEEDING THE BRAKE FLUID CIRCUIT

Air trapped in the brake fluid circuit acts like a cushion to absorb a large proportion of the pressure developed by the master cylinder and thus interferes with the full braking performance of the brake caliper. The presence of air is indicated by "sponginess" of the brake lever and also by lack of braking force. Considering the danger to which such trapped air exposes the machine and rider, it is essential that after remounting the brake and restoring the brake system to the normal condition, the brake fluid circuit be purged of air in the following manner:

FRONT BRAKE

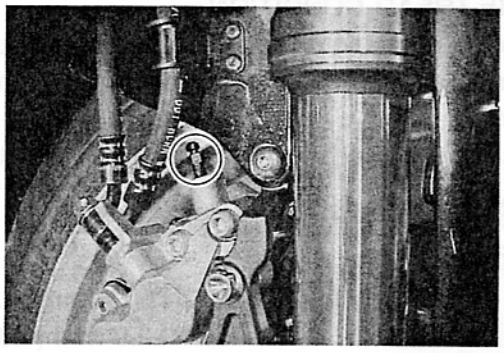

- Fill the master cylinder reservoir to the top of the inspection window. Replace the reservoir cap to prevent dirt from entering.
- Attach a hose to the air bleeder valve and insert the free end of the hose into a receptacle.
- Squeeze and release the brake lever several times in rapid succession and squeeze the lever fully without releasing it. Loosen the air bleeder valve by turning it a quarter of a turn so that the brake fluid runs into the receptacle, this will remove the tension of the brake lever causing it to touch the handlebar grip. Then, close the air bleeder valve, pump and squeeze the lever, and open the valve. Repeat this process until fluid flowing into the receptacle no longer contains air bubbles.

NOTE:
While bleeding the brake system, replenish the brake fluid in the reservoir as necessary. Make sure that there is always some fluid visible in the reservoir.

- Close the air bleeder valve and disconnect the hose. Fill the reservoir with brake fluid to the top of the inspection window.

Air bleeder valve: 8 N·m (0.8 kgf·m, 6.0 lb-ft)

⚠ CAUTION

Handle brake fluid with care: the fluid reacts chemically with paint, plastics, rubber materials, etc.

REAR BRAKE

- Bleed air from the rear brake system as the same manner of front brake.

NOTE:
The only difference between bleeding the front and rear brakes is that the rear master cylinder is actuated by a pedal.

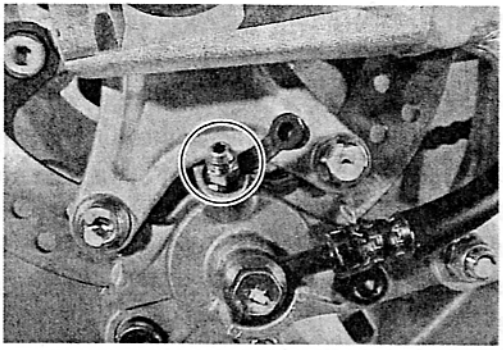

TIRES

TIRE TREAD CONDITION

Operating the motorcycle with excessively worn tires will decrease riding stability and consequently invite a dangerous situation. It is highly recommended to replace a tire when the remaining depth of tire tread reaches the following specification.

TOOL **09900-20805: Tire depth gauge**

DATA **Tire tread depth:**

Service Limit: FRONT 1.6 mm (0.06 in)
REAR 2.0 mm (0.08 in)

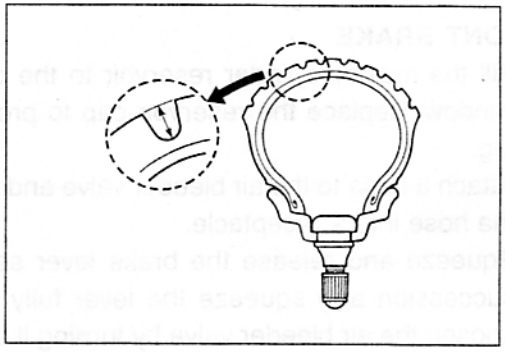

TIRE PRESSURE

If the tire pressure is too high or too low, steering will be adversely affected and tire wear will increase. Therefore, maintain the correct tire pressure for good roadability and a longer tire life. Cold inflation tire pressure is as follows.

DATA **Cold inflation tire pressure**

Solo riding: Front: 250 kPa (2.50 kgf/cm², 36 psi)
Rear: 290 kPa (2.90 kgf/cm², 42 psi)
Dual riding: Front: 250 kPa (2.50 kgf/cm², 36 psi)
Rear: 290 kPa (2.90 kgf/cm², 42 psi)

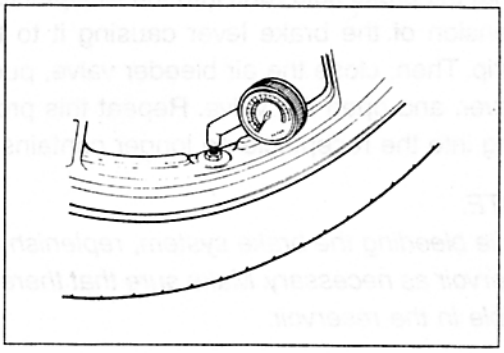

⚠ CAUTION

The standard tire fitted on this motorcycle is a 120/70 ZR17 (58W) for the front and a 190/50 ZR17 (73W) for the rear. The use of tires other than those specified may cause instability. It is highly recommended to use the specified tires.

DATA **TIRE TYPE**

BRIDGESTONE
FRONT: BT011F E
REAR : BT010R E

STEERING

The steering should be adjusted properly for smooth turning of the handlebars and safe operation. Overtight steering prevents smooth turning of the handlebars and too loose steering will cause poor stability. Check that there is no play in the front fork. Support the motorcycle so that the front wheel is off the ground. With the wheel facing straight ahead, grasp the lower fork tubes near the axle and pull forward. If play is found, readjust the steering. (☞ 6-24)

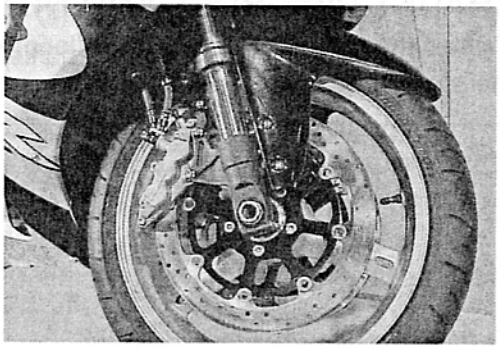

FRONT FORK

Inspect the front forks for oil leakage, scoring or scratches on the outer surface of the inner tubes. Replace any defective parts, if necessary. (☞ 6-14)

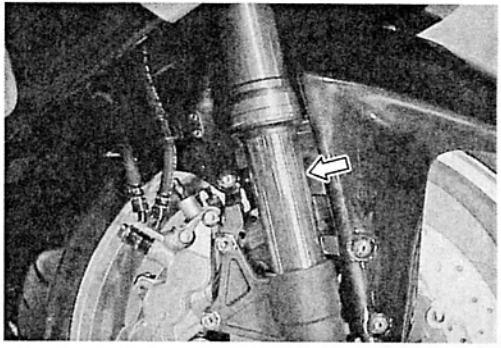

REAR SUSPENSION

Inspect the rear shock absorbers for oil leakage and check that there is no play in the swingarm. Replace any defective parts if necessary. (☞ 6-41)

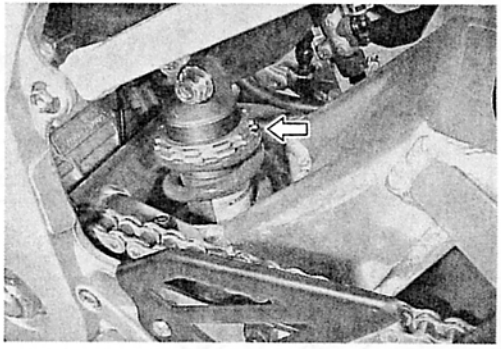

EXHAUST PIPE BOLT AND NUT

- Tighten the exhaust pipe bolts, muffler mounting bolt and nut to the specified torque.

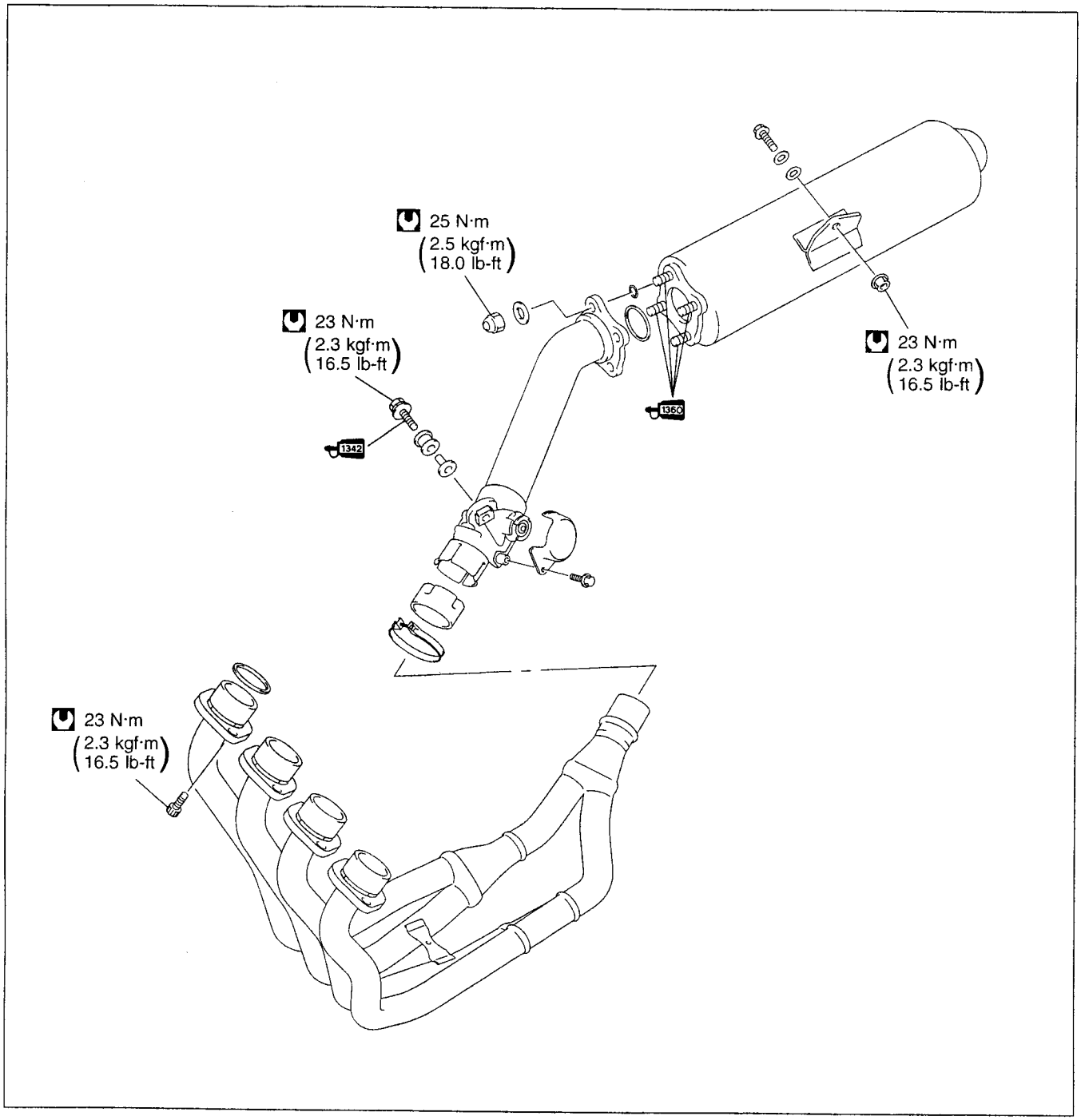

CHASSIS BOLTS AND NUTS

Check that all chassis bolts and nuts are tightened to their specified torque. The locations of the following nuts and bolts on the motorcycle.: ☞2-28

Item	N·m	kgf·m	lb-ft
① Steering stem head nut	90	9.0	65.0
② Steering stem lock nut	80	8.0	58.0
③ Front fork upper clamp bolt	23	2.3	16.5
④ Front fork lower clamp bolt	23	2.3	16.5
⑤ Front fork cap bolt	23	2.3	16.5
⑥ Front axle	100	10.0	72.5
⑦ Front axle pinch bolt	23	2.3	16.5
⑧ Handlebar set bolt	10	1.0	7.0
⑨ Handlebar clamp bolt	23	2.3	16.5
⑩ Front brake master cylinder mounting bolt	10	1.0	7.0
⑪ Front brake caliper mounting bolt	25	2.5	18.1
⑫ Front brake caliper housing bolt	21	2.2	15.2
⑬ Brake hose union bolt (Front & Rear)	23	2.3	16.5
⑭ Caliper air bleeder valve (Front & Rear)	8	0.8	6.0
⑮ Brake disc bolt (Front)	23	2.3	16.5
⑯ Brake disc bolt (Rear)	35	3.5	25.5
⑰ Rear brake caliper mounting bolt	25	2.5	18.1
⑱ Rear brake caliper housing bolt	37	3.7	27.0
⑲ Rear brake master cylinder mounting bolt	10	1.0	7.0
⑳ Rear brake master cylinder rod lock nut	18	1.8	13.0
㉑ Front footrest bracket mounting bolt	23	2.3	16.5
㉒ Swingarm pivot nut	100	10.0	72.5
㉓ Swingarm pivot lock nut	90	9.0	65.0
㉔ Torque link bolt and nut (Front)	28	2.8	20.0
㉕ Torque link bolt and nut (Rear)	34	3.4	24.6
㉖ Rear suspension height adjuster nut	115	11.5	83.2
㉗ Rear shock absorber mounting bolt/nut (Upper & Lower)	50	5.0	36.0
㉘ Rear cushion lever/rod mounting nut	78	7.8	56.5
㉙ Rear axle nut	100	10.0	72.5
㉚ Rear sprocket nut	60	6.0	43.5
㉛ Steering damper bolt/nut	23	2.3	16.5

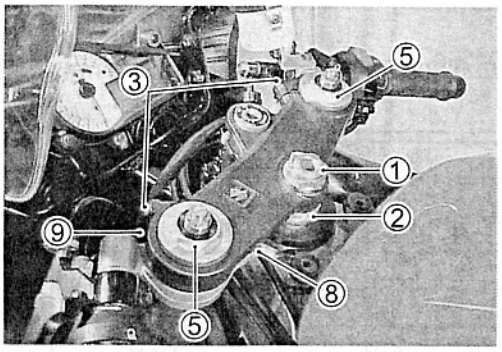
3
5
1
2
9
8
5

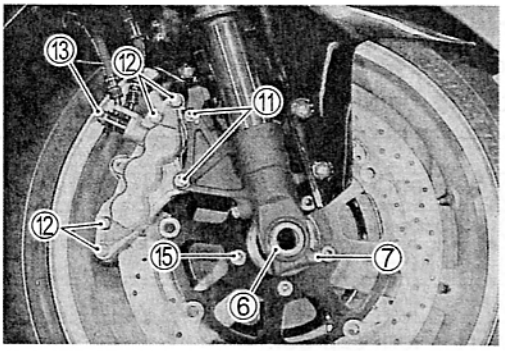
13
12
11
12
15
7
6

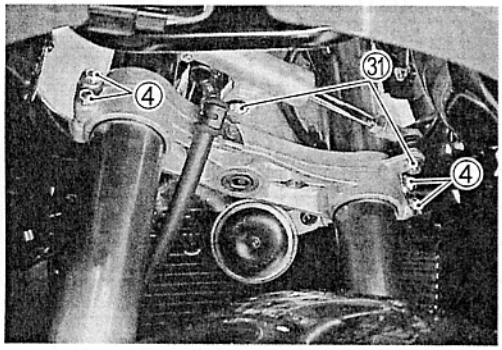
31
4
4

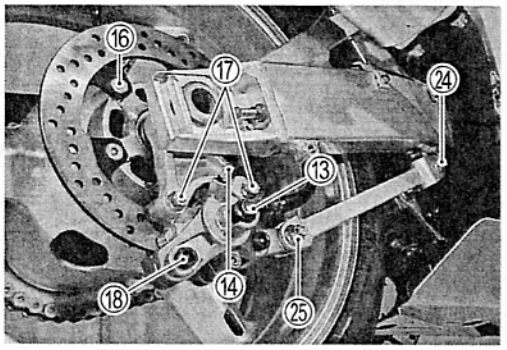
16
17
24
13
18
14
25

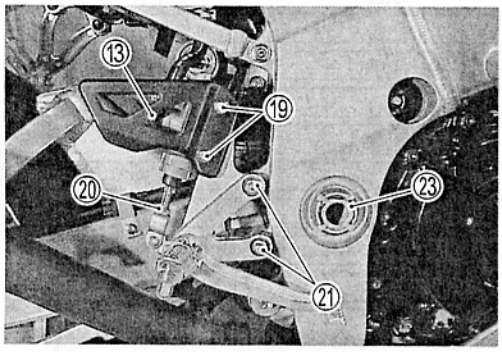
13
19
20
23
21

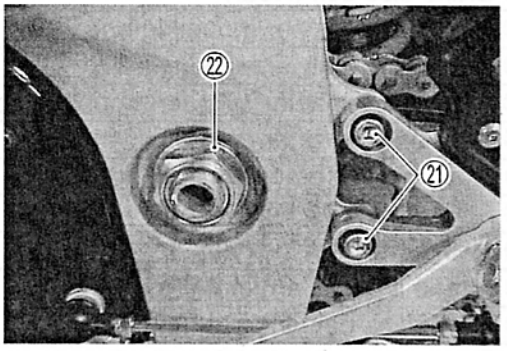
22
21

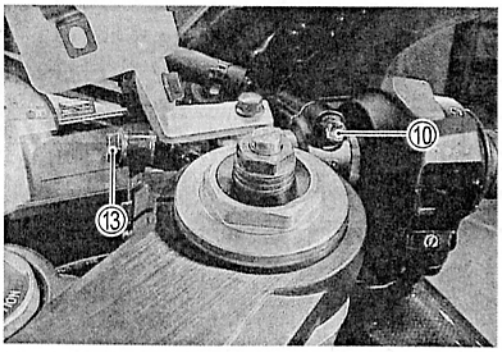
10
13

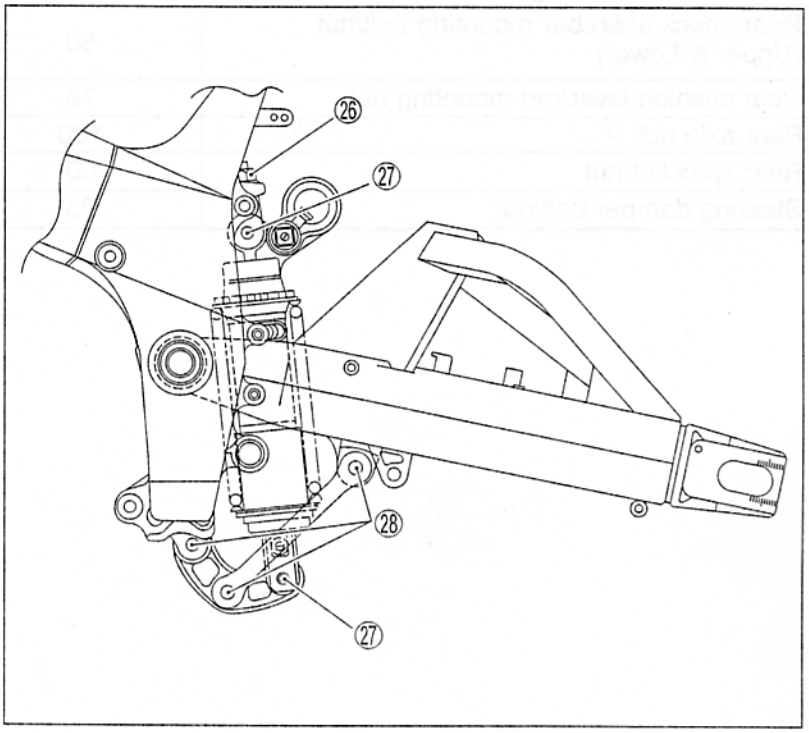
26
27
28
27

COMPRESSION PRESSURE CHECK

The compression pressure reading of a cylinder is a good indicator of its internal condition.
The decision to overhaul the cylinder is often based on the results of a compression test. Periodic maintenance records kept at your dealership should include compression readings for each maintenance service.

COMPRESSION PRESSURE SPECIFICATION

Standard	Limit	Difference
1 300 – 1 700 kPa (13 – 17 kgf/cm², 185 – 242 psi)	1000 kPa (10 kgf/cm², 148 psi)	200kPa (2 kgf/cm², 28 psi)

Low compression pressure can indicate any of the following conditions:

* Excessively worn cylinder walls
* Worn piston or piston rings
* Piston rings stuck in grooves
* Poor valve seating
* Ruptured or otherwise defective cylinder head gasket

Overhaul the engine in the following cases:

* Compression pressure in one of the cylinders is less than 1000 kPa (10 kgf/cm², 148 psi).
* The difference in compression pressure between any two cylinders is more than 200 kPa (2 kgf/cm², 28 psi).
* All compression pressure readings are below 1 300 kPa (13 kgf/cm², 185 psi) even when they measure more than 1000 kPa (10 kgf/cm², 148 psi).

COMPRESSION TEST PROCEDURE

NOTE:

* *Before testing the engine for compression pressure, make sure that the cylinder head nuts are tightened to the specified torque values and the valves are properly adjusted.*
* *Have the engine warmed up before testing.*
* *Make sure that the battery is fully-charged.*

Remove the related parts and test the compression pressure in the following manner.

- Lift and support the fuel tank. (☞ 4-56)
- Remove all the spark plugs. (☞ 2-5)
- Install the compression gauge and adaptor in the spark plug hole. Make sure that the connection is tight.
- Keep the throttle grip in the fully opened position.
- Press the starter button and crank the engine for a few seconds. Record the maximum gauge reading as the cylinder compression.
- Repeat this procedure with the other cylinders.

TOOL **09915-64510: Compression gauge set**
09913-10750: Adaptor

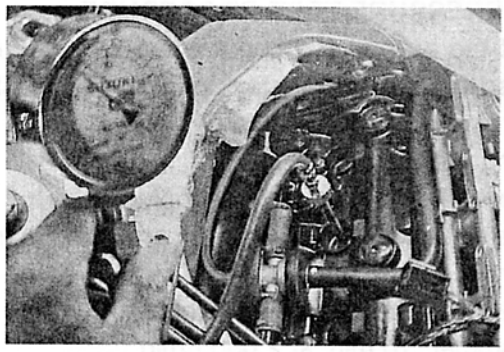

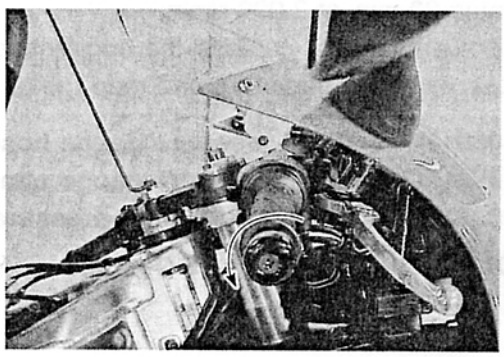

OIL PRESSURE CHECK

Check the engine oil pressure periodically. This will give a good indication of the condition of the moving parts.

OIL PRESSURE SPECIFICATION

100 – 400 kPa (1.0 – 4.0 kgf/cm², 14 – 57 psi) at 3 000 r/min., Oil temp. at 60°C (140°F)

If the oil pressure is lower or higher than the specification, the following causes may be considered.

LOW OIL PRESSURE

* Clogged oil filter
* Oil leakage from the oil passage
* Damaged O-ring
* Defective oil pump
* Combination of the above items

HIGH OIL PRESSURE

* Engine oil viscosity is too high
* Clogged oil passage
* Combination of the above items

OIL PRESSURE TEST PROCEDURE

Start the engine and check if the oil pressure indicator light is turned on. If the light stays on, check the oil pressure indicator light circuit. If the circuit is OK, check the oil pressure in the following manner.

- Remove the main oil gallery plug ①.
- Install the oil pressure gauge and adaptor into the main oil gallery.
- Warm up the engine as follows:
  Summer: 10 min. at 2 000 r/min.
  Winter: 20 min. at 2 000 r/min.
- After warming up, increase the engine speed to 3 000 r/min. (observe the tachometer), and read the oil pressure gauge.

TOOL 09915-74520: Oil pressure gauge hose
09915-74540: Oil pressure gauge attachment
09915-77330: Meter (for high pressure)

Oil gallery plug (M16): 35 N·m (3.5 kgf·m, 25.5 lb-ft)

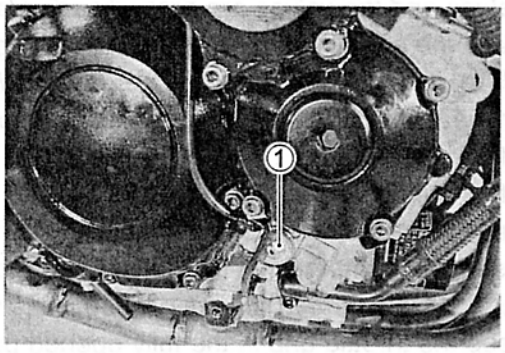

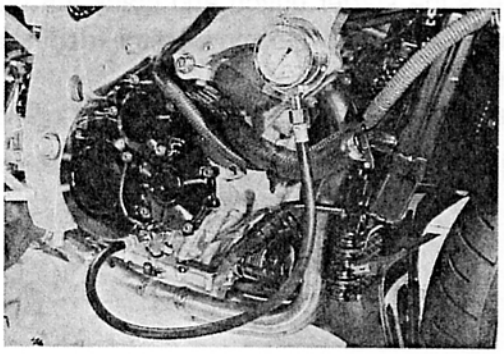

ENGINE

CONTENTS

ENGINE COMPONENTS REMOVABLE WITH THE ENGINE IN PLACE 3- 2
ENGINE REMOVAL AND INSTALLATION 3- 3
ENGINE REMOVAL 3- 3
ENGINE INSTALLATION 3-11
ENGINE DISASSEMBLY 3-15
ENGINE COMPONENTS INSPECTION AND SERVICE 3-28
PAIR VALVE 3-28
CYLINDER HEAD COVER 3-29
CAMSHAFT 3-29
CAM CHAIN TENSION ADJUSTER 3-31
CAM CHAIN TENSIONER 3-31
CAM CHAIN GUIDE 3-31
CYLINDER HEAD AND VALVE 3-32
CLUTCH 3-42
OIL PUMP 3-43
STARTER CLUTCH 3-43
GENERATOR 3-43
WATER PUMP 3-43
GEARSHIFT SYSTEM 3-44
OIL PRESSURE REGULATOR 3-45
OIL STRAINER 3-45
TRANSMISSION 3-46
CYLINDER 3-49
PISTON AND PISTON RING 3-50
CRANKCASE 3-53
BALANCER SHAFT 3-59
BALANCER SHAFT JOURNAL BEARING 3-59
CRANKSHAFT AND CONROD 3-61
CRANKSHAFT JOURNAL BEARING 3-64
CRANKSHAFT THRUST BEARING 3-66
ENGINE REASSEMBLY 3-68

ENGINE COMPONENTS REMOVABLE WITH ENGINE IN PLACE

The parts listed below can be removed and reinstalled without removing the engine from the frame. Refer to page listed in each section for removal and reinstallation instructions.

ENGINE CENTER

ITEM	REMOVAL	INSPECTION	REINSTALLATION
PAIR valve	☞3-15	☞3-28	☞3-99
Starter motor	☞3-15	☞7-12	☞3-99
Breather cover	☞3-24	—	☞3-78
Thermostat	☞3-17	☞5-10	☞3-92
Cylinder head cover	☞3-15	☞3-29	☞3-98
Camshaft	☞3-16	☞3-29	☞3-93
Intake pipe	—	—	☞3-41
Oil filter	☞3-24	—	☞3-78
Oil cooler	☞3-4	—	☞3-14
Oil pan	☞3-25	—	☞3-77

ENGINE RIGHT SIDE

ITEM	REMOVAL	INSPECTION	REINSTALLATION
Exhaust pipe and muffler	☞3-5	—	☞3-14
Cam chain tension adjuster	☞3-16	☞3-31	☞3-96
Clutch cover	☞3-18	—	☞3-90
Clutch (plates)	☞3-18	☞3-42	☞3-88
Primary driven gear	☞3-19	—	☞3-86
Oil pump	☞3-20	☞3-43	☞3-86
Gearshift shaft	☞3-20	☞3-44	☞3-86
Starter idle gear cover	☞3-22	—	☞3-84
Starter idle gear	☞3-22	—	☞3-83
Starter clutch cover	☞3-22	—	☞3-83
Starter clutch	☞3-23	☞3-43	☞3-83
CKP sensor	☞3-23	☞7-21	☞3-82
Primary drive gear	☞3-23	—	☞3-83
Cam chain tensioner	☞3-22	☞3-31	☞3-82
Cam chain guide	☞3-22	☞3-31	☞3-82

ENGINE LEFT SIDE

ITEM	REMOVAL	INSPECTION	REINSTALLATION
Engine sprocket	☞3-8	—	☞3-13
Gear position sensor	☞3-24	☞4-50	☞3-79
Generator (cover)	☞3-23	☞3-43	☞3-81
Generator rotor	☞3-23	—	☞3-81
Water pump	☞3-23	☞5-14	☞3-80

ENGINE REMOVAL AND INSTALLATION

ENGINE REMOVAL

Before taking the engine out of the frame, wash the engine using a steam cleaner. Engine removal is sequentially explained in the following steps. Reinstall the engine by reversing the removal procedure.

- Remove the under cowlings. (☞6-3)
- Remove the front and rear seats (seat tail cover). (☞6-6)
- Remove the fuel tank. (☞4-56)

- Disconnect the battery ⊖ lead wire.

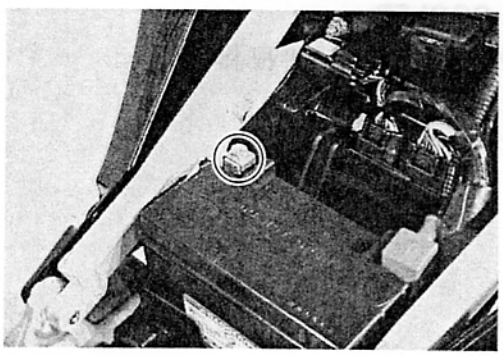

- Drain engine oil. (☞2-12)

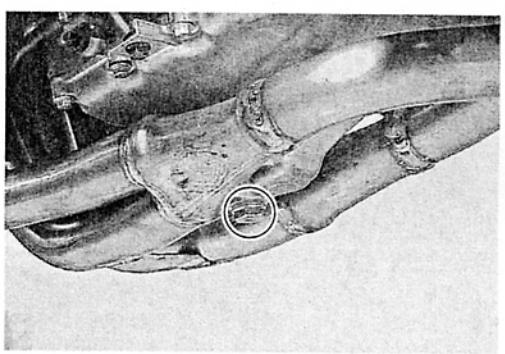

- Drain engine coolant. (☞2-17)

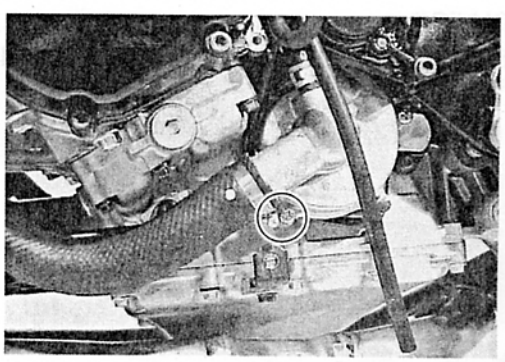

- Remove the air cleaner box. (☞4-66)

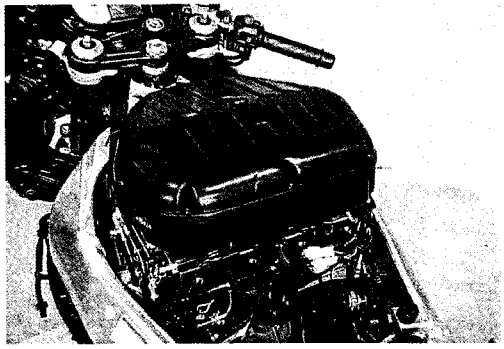

- Remove the throttle body. (☞4-67)

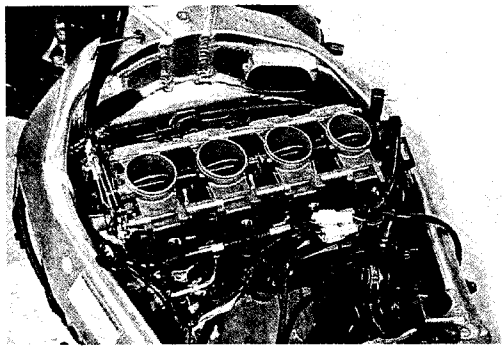

OIL COOLER

- Remove the oil cooler pipes.

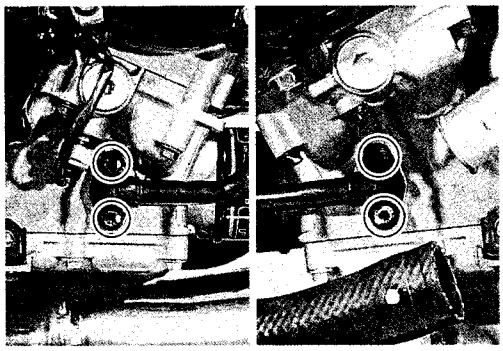

- Remove the oil cooler.

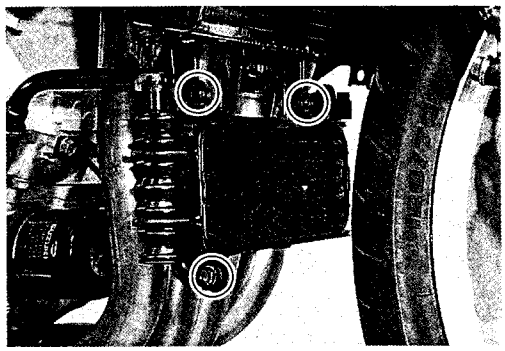

RADIATOR

- Disconnect the reserve tank hose and radiator inlet hose.

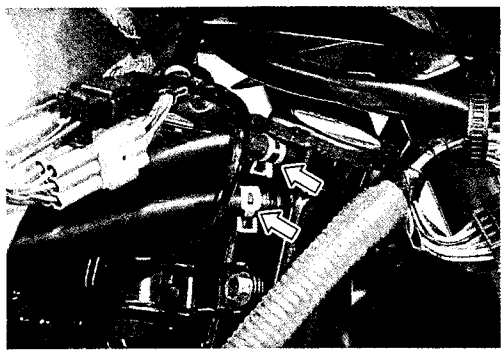

- Disconnect the radiator inlet hoses.

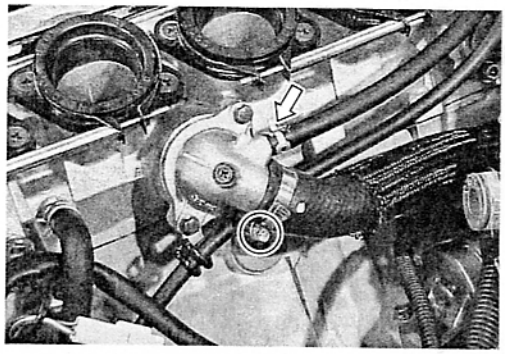

- Disconnect the cooling fan thermo-switch coupler ① and cooling fan coupler ②.

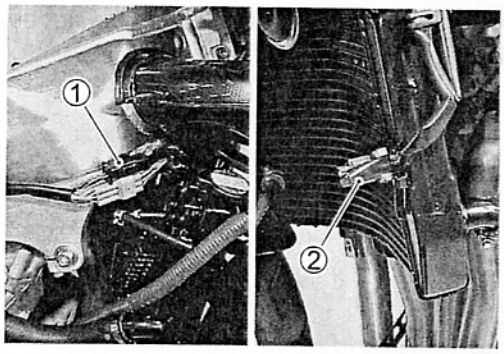

- Remove the radiator mounting bolts.
- Remove the radiator.

⚠ CAUTION

Be careful not to bent the radiator fin.

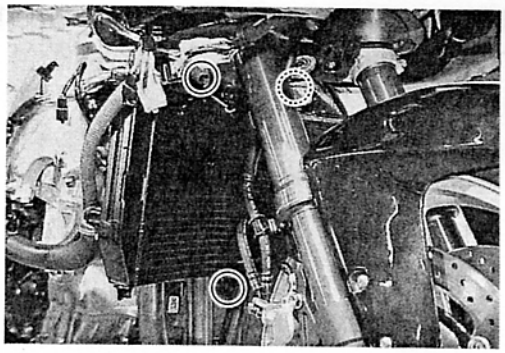

- Remove the resorvoir tank.

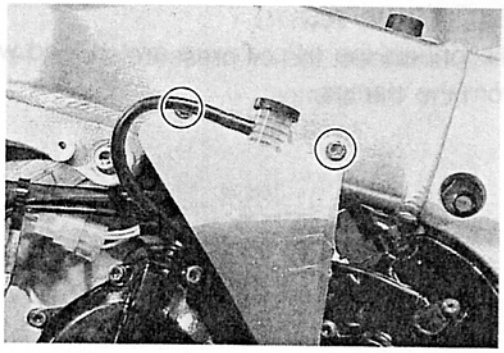

- Remove the front engine cover.

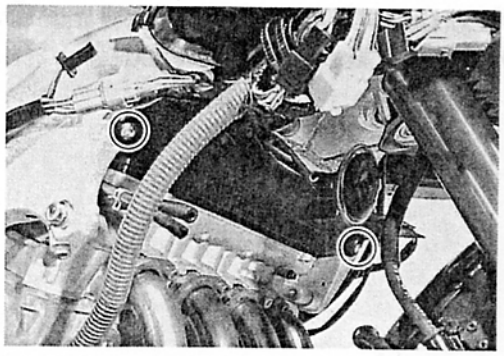

EXHAUST PIPE AND MUFFLER

- Remove the exhaust pipe bolts.

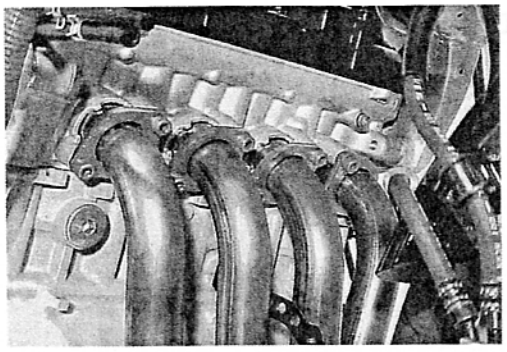

- With the muffler connecting bolt loosened, remove the exhaust pipe.

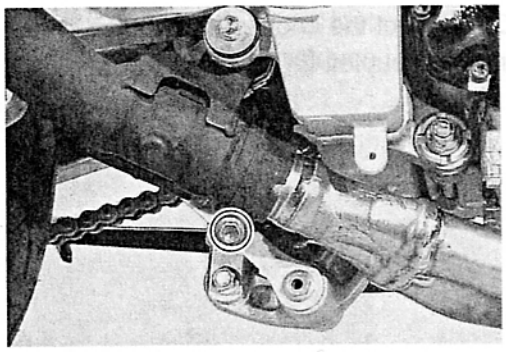

- Remove the radiator mounting bracket ① and the oil cooler mounting bracket ②.

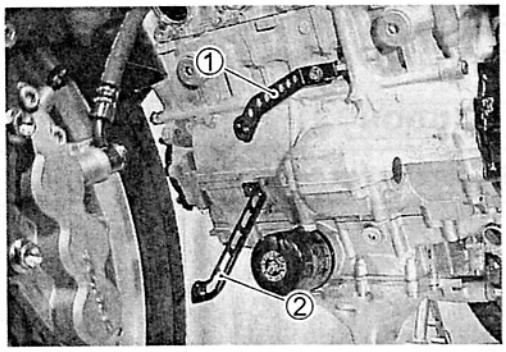

ELECTRIC PARTS

- Disconnect the oil pressure switch lead wire ① and remove it from the clamps.

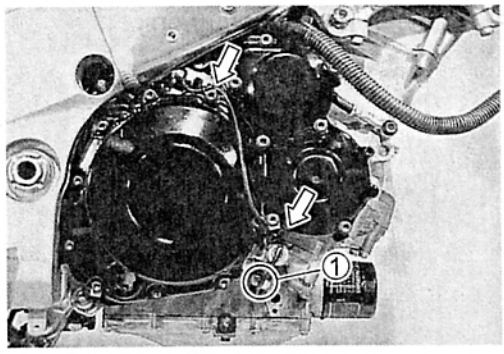

- Disconnect the starter motor lead wire ②.
- Disconnect the ground lead wire ③.

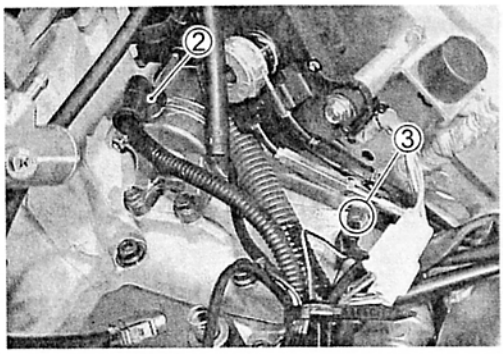

- Disconnect the crankshaft position sensor coupler ①.
- Disconnect the gear position switch coupler ②.
- Disconnect the engine coolant temperature sensor coupler ③.

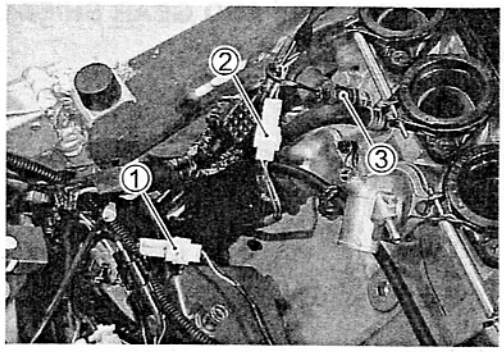

- Disconnect the generator coupler ④.

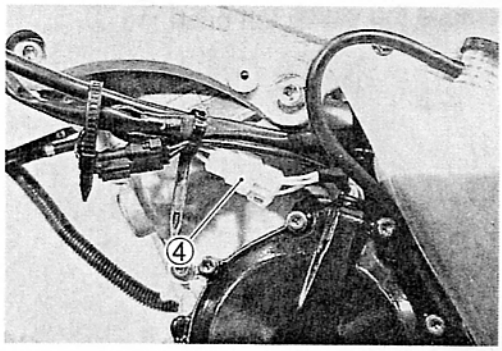

- Disconnect the lead wire couplers from each ignition coil/plug cap and camshaft position sensor.

⚠ CAUTION

Do not remove the ignition coil/plug cap before disconnecting its lead wire coupler.

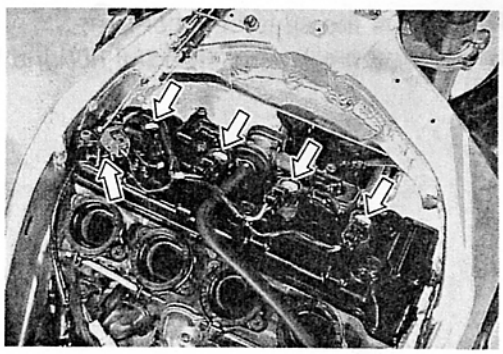

- Remove the ignition coils/plug caps.

⚠ CAUTION

*** Do not pry up the ignition coil/plug cap with a driver or a bar to avoid its damage.**
*** Be careful not to drop the ignition coil/plug cap to prevent its short or open circuit.**

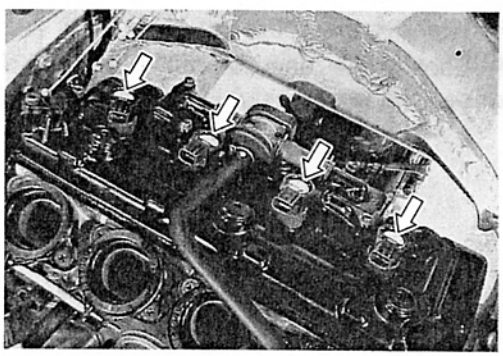

ENGINE SPROCKET AND GEAR SHIFT LEVER

- Remove the gearshift lever.
- Remove the engine sprocket cover.

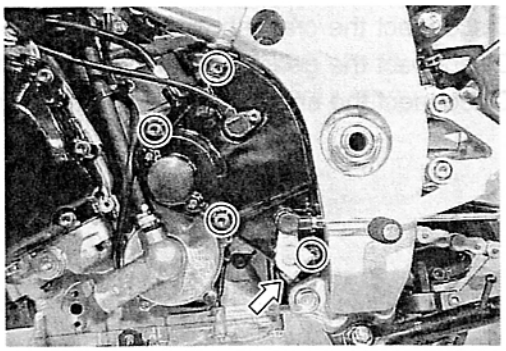

- Remove the clutch push rod ①.

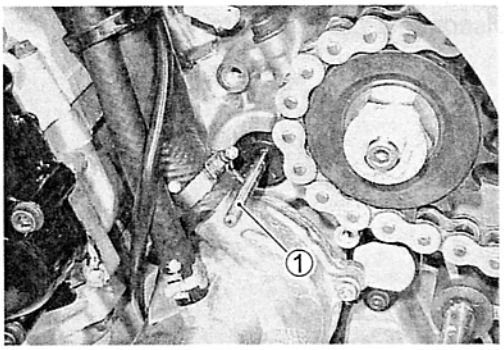

- Remove the speed sensor rotor ②.
- Remove the engine sprocket nut and the washer.

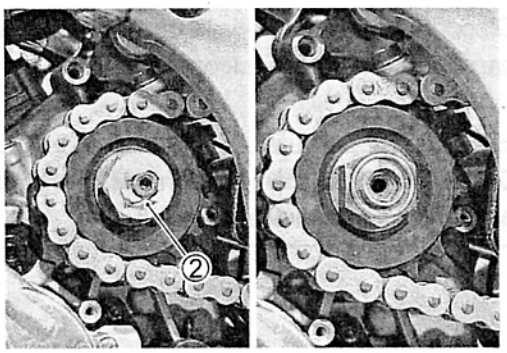

- Remove the cotter pin. (For E-03, 28, 33)
- Loosen the rear axle nut ③ and the rear torque link nut ④.
- Loosen the left and right chain adjusters ⑤.

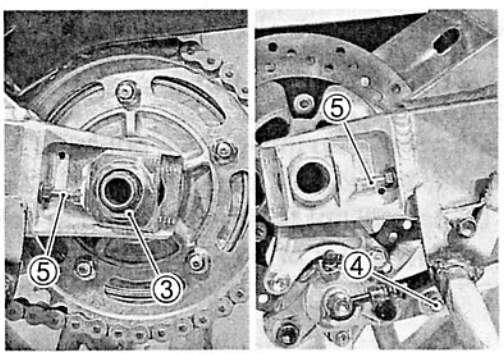

NOTE:
Jack up the motorcycle and fix it for safety.

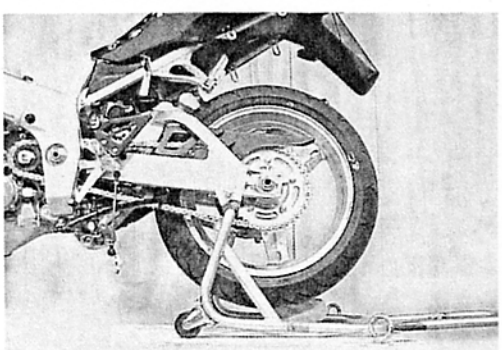

- Push the rear wheel forward and make sure that the drive chain has enough slack.
- Disengage the drive chain from the rear sprocket.

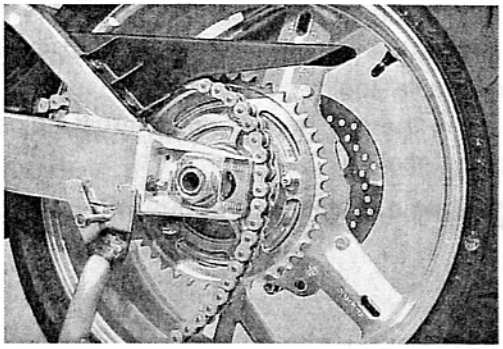

- Remove the engine sprocket ⑥.

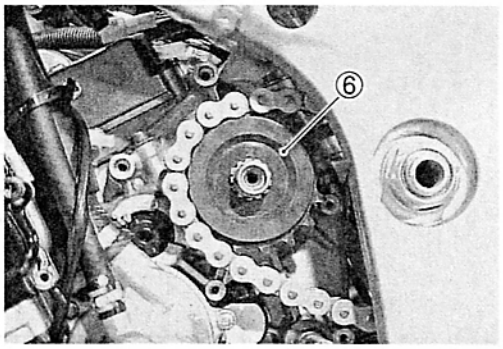

ENGINE MOUNTING

- Support the engine using an engine jack.

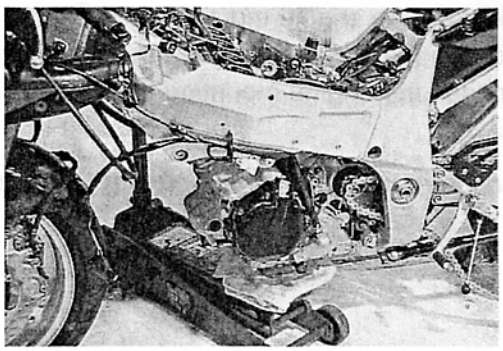

- Remove the engine mounting bolts Ⓐ, Ⓒ.

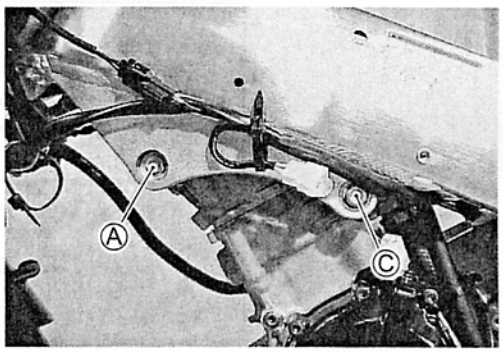

- Loosen the engine mounting pinch bolts ①, ③.
- Remove the engine mounting bolts Ⓑ, Ⓓ.

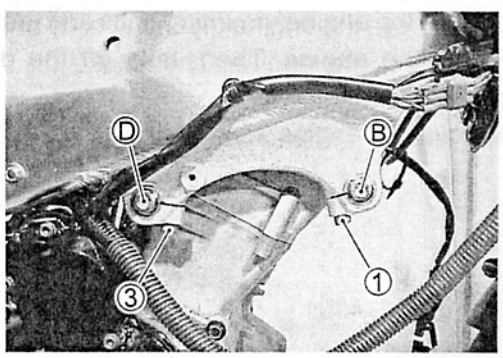

- Remove the engine mounting nut ⑤.
- Remove the engine mounting thrust adjuster locknut ⑦ with the special tool.
- Loosen the engine mounting thrust adjuster ⑥ fully with the special tool.

TOOL 09940-14990: Engine mounting thrust adjuster socket wrench

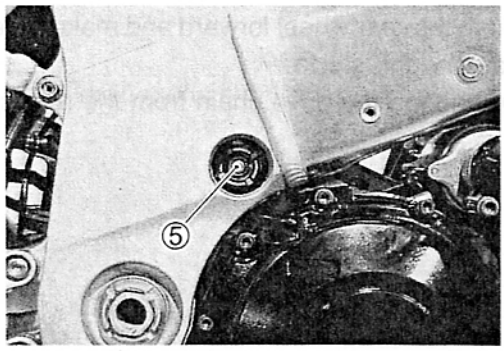

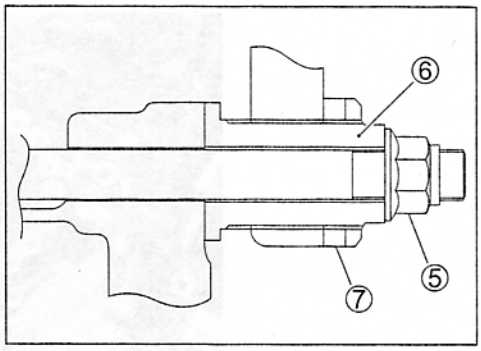

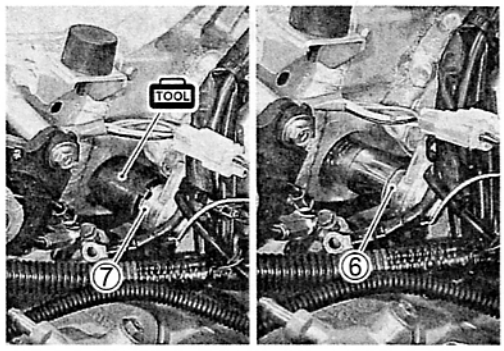

- Remove the engine mounting nut ⑧.
- Loosen the engine mounting thrust adjuster locknut ⑩.
- Loosen the engine mounting thrust adjuster ⑨.

NOTE:
Do not remove the engine mounting bolts at this stage.

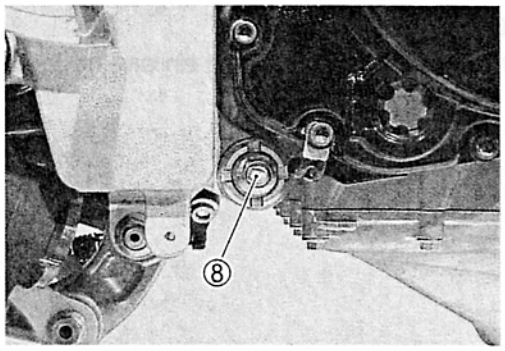

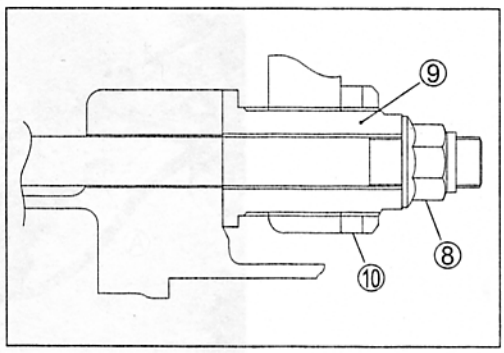

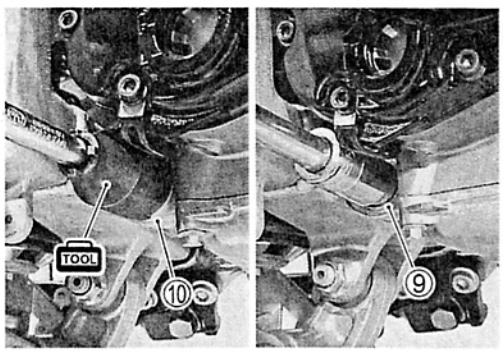

- Remove the engine mounting bolts and gradually lower the front side of the engine. Then, take off the drive chain from the driveshaft.
- Remove the engine assembly.

ENGINE INSTALLATION

Install the engine in the reverse order of engine removal.
Pay attention to the following points:

NOTE:
Be careful not to damage the frame and engine when installing the engine.

- Before installing the engine, install the spacer ①.

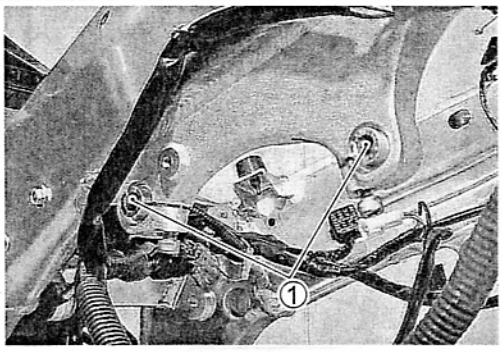

- Before installing the engine, install the engine mounting thrust adjusters ② and ③.

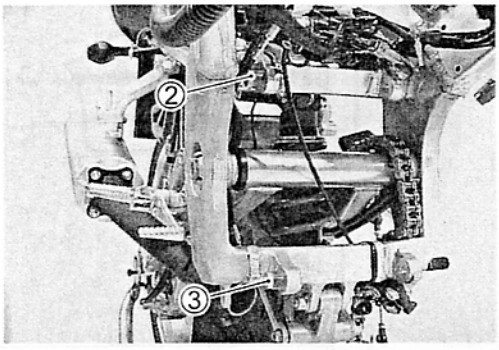

- Gradually raise the rear side of the engine assembly, and then put the drive chain on the driveshaft.
- Install all engine mounting bolts, spacers and tighten them temporarily. (☞ 3-12)

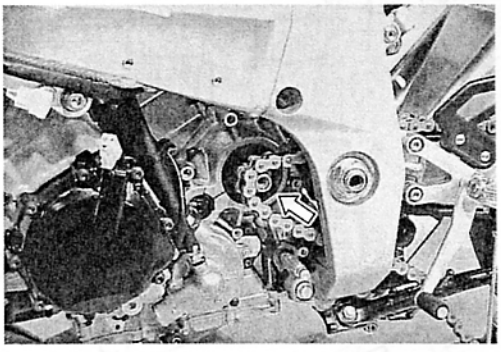

⚠ CAUTION

Be careful not to catch the wiring harness between the frame and the engine.

- Tighten the engine mounting thrust adjusters to the specified torque.
- Tighten the engine mounting thrust adjuster lock nuts to the specified torque with the special tool.

Engine mounting thrust adjuster locknut:
45 N·m (4.5 kgf·m, 32.5 lb-ft)

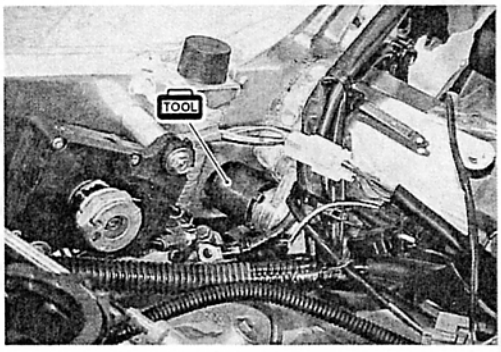

- Tighten all engine mounting bolts and nuts to the specified torque. (☞ 3-12)

NOTE:
The engine mounting nuts are self-locking. Once the nuts have been removed, they are no longer of any use.

- Tighten the engine mounting pinch bolt to the specified torque. (☞ 3-12)

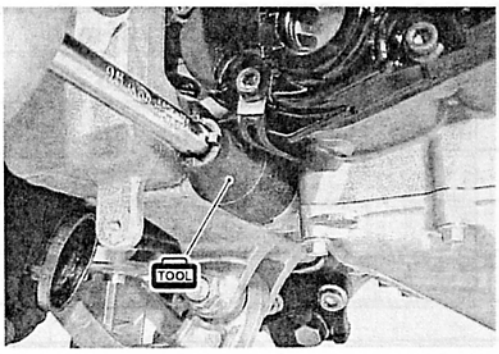

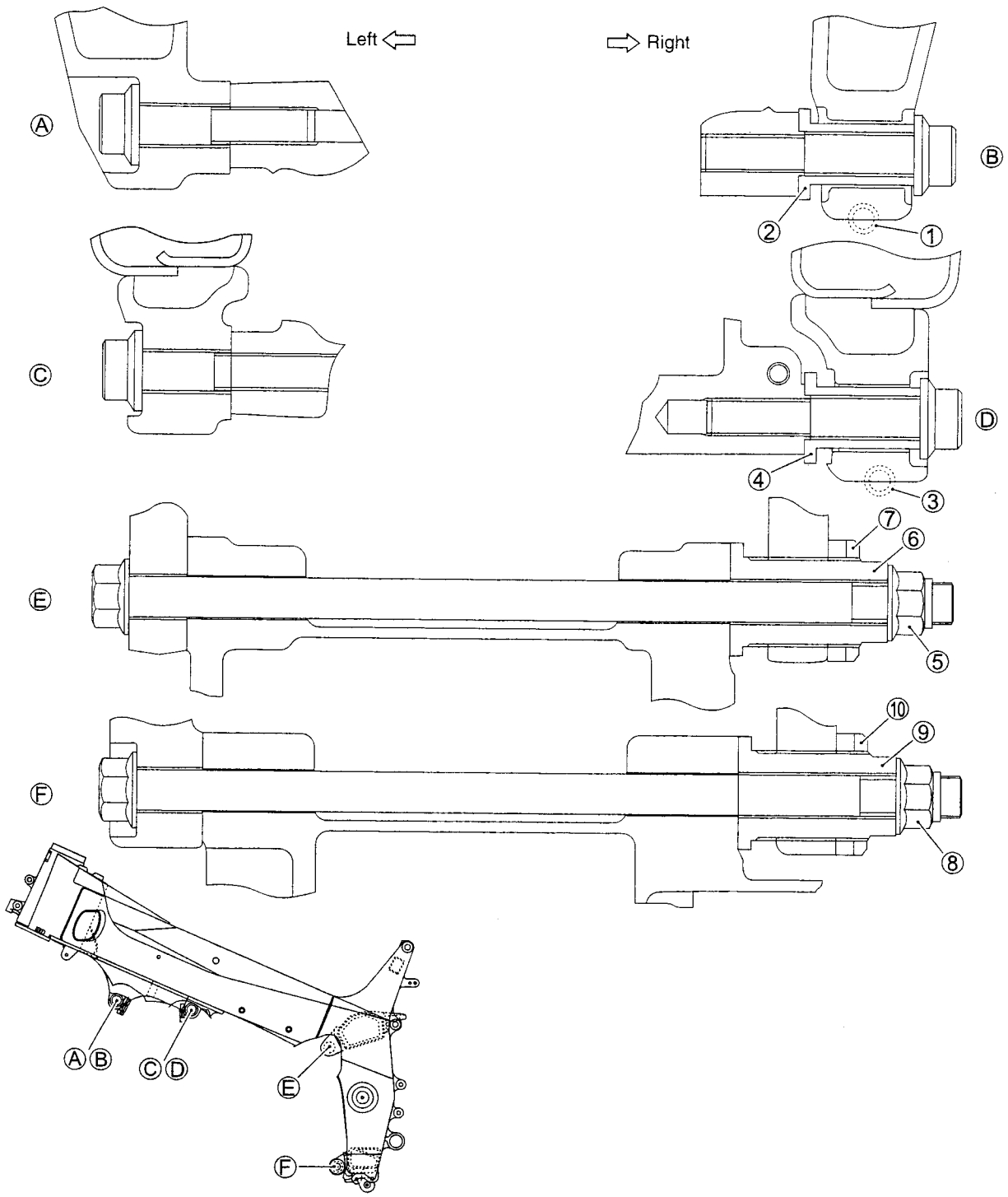

ITEM	N·m	kgf·m	lb-ft
ⒶⒷⒸⒹ	55	5.5	39.8
⑤⑧	75	7.5	54.0
①③	23	2.3	16.5
⑥⑨	23	2.3	16.5
⑦⑩	45	4.5	32.5

LENGTH

ITEM		mm	in
Bolt	ⒶⒸ	45	1.77
	ⒷⒹ	55	2.17
	ⒺⒻ	215	8.46
Spacer	②④	30.5	1.20
Adjuster	⑥⑨	40	1.57

- Install the engine sprocket and the washer.
- Apply a small quantity of THREAD LOCK "1342" to the drive shaft thread portion.

1342 99000-32050: THREAD LOCK "1342"

- Tighten the engine sprocket nut ① to the specified torque.

Engine sprocket nut: 115 N·m (11.5 kgf·m, 83.2 lb-ft)

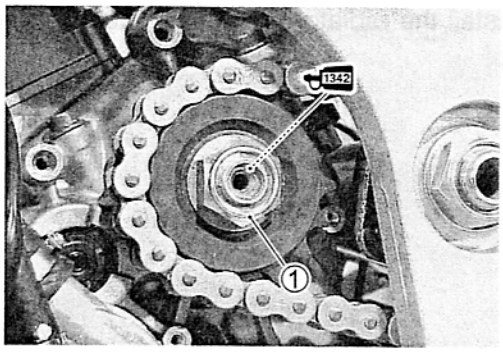

- Install the speed sensor rotor.
- Tighten the speed sensor rotor bolt to the specified torque.

Speed sensor rotor bolt: 20 N·m (2.0 kgf·m, 14.4 lb-ft)

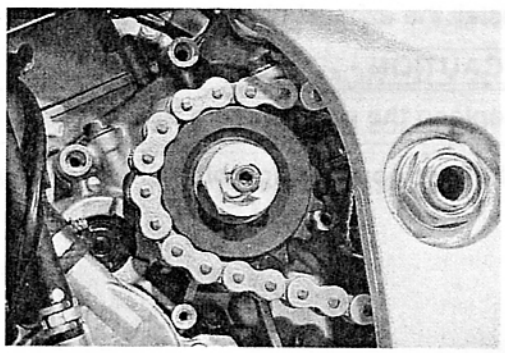

- Apply grease to the clutch push rod and install it.

A 99000-25030: SUZUKI SUPER GREASE "A" (For USA)
99000-25010: SUZUKI SUPER GREASE "A" (For the others)

- Align the hole of the clutch release cylinder with the end of the clutch push rod when installing the engine sprocket cover.

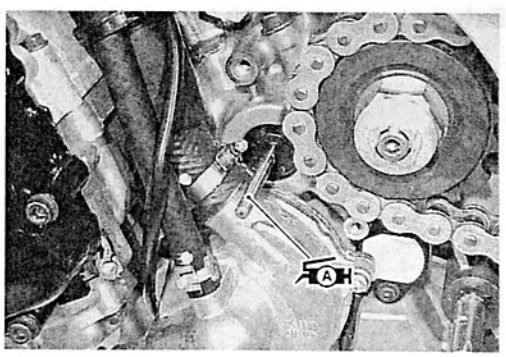

- Tighten the speed sensor bolt ① to the specified torque.

Speed sensor bolt: 4.5 N·m (0.45 kgf·m, 3.0 lb-ft)

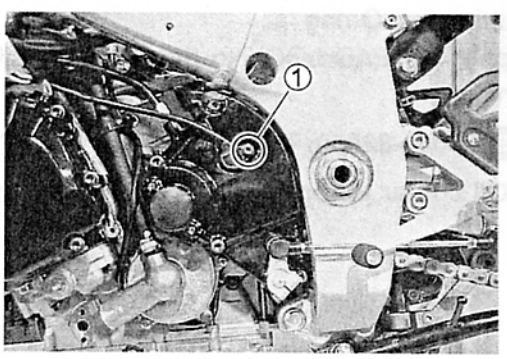

- Install the engine sprocket cover and the gearshift lever.

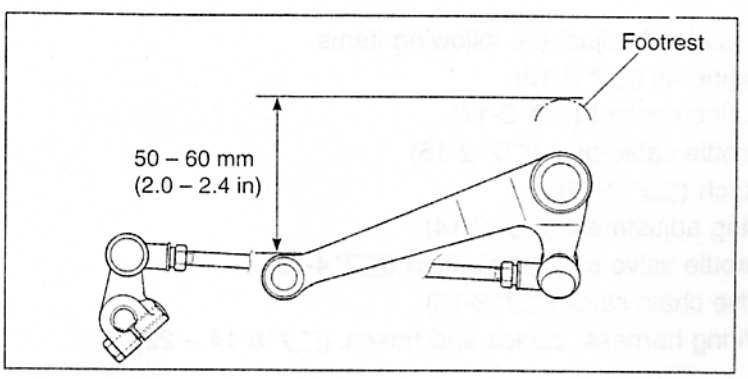

- Install the radiator mounting bracket ① and oil cooler bracket ②.

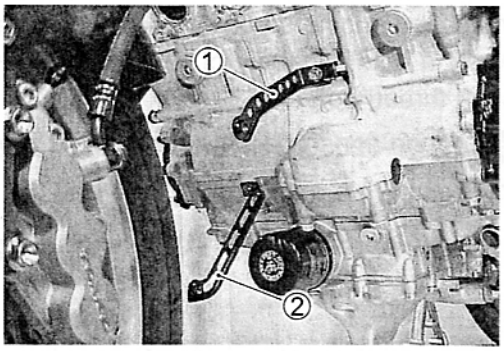

- Install the exhaust pipe.

⚠ CAUTION

Replace the gaskets with new ones.

Muffler connecting bolt: 23 N·m (2.3 kgf·m, 16.5 lb-ft)

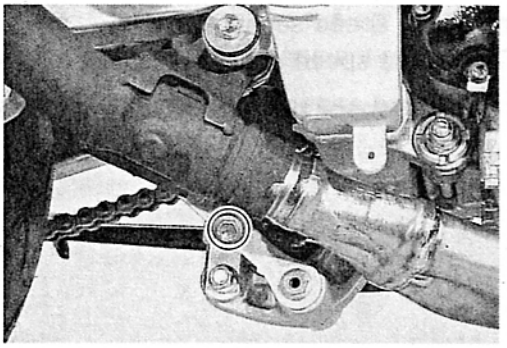

Exhaust pipe bolt: 23 N·m (2.3 kgf·m, 16.5 lb-ft)

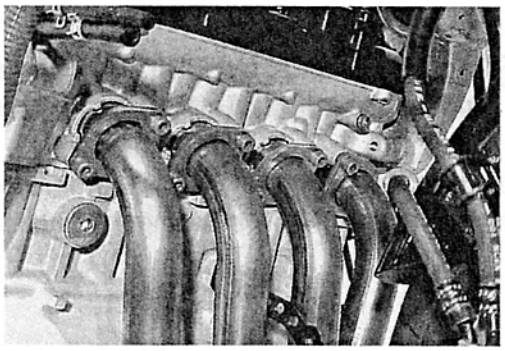

- Fit the new O-ring ①.
- Apply THREAD LOCK to the bolts, install the oil cooler pipe union.

1342 99000-32050: THREAD LOCK "1342"

Oil cooler union bolt: 10 N·m (1.0 kgf·m, 7.0 lb-ft)

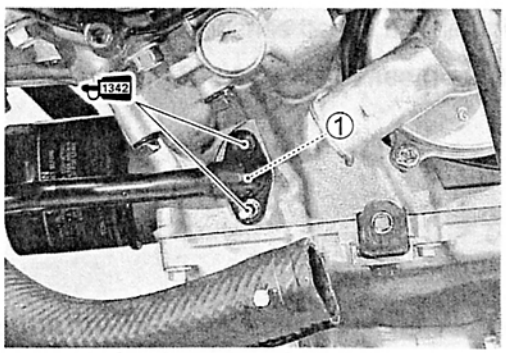

- Install and adjust the following items.

* Engine oil (☞2-12)
* Engine coolant (☞2-17)
* Throttle cable play (☞2-15)
* Clutch (☞2-16)
* Idling adjustment (☞2-14)
* Throttle valve synchronization (☞4-75)
* Drive chain slack (☞2-16)
* Wiring harness, cables and hoses. (☞8-14 – 22)

ENGINE DISASSEMBLY

⚠ CAUTION

Identify the position of each removed part. Organize the parts in their respective groups (e.g., intake, exhaust) so that they can be reinstalled in their original positions.

- Remove the spark plugs. (☞2-4)

STARTER MOTOR

- Remove the starter motor.

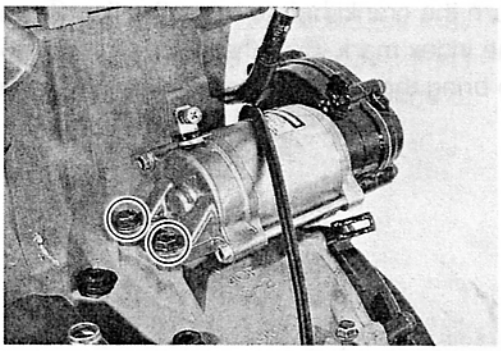

PAIR VALVE

- Remove the PAIR valve ①.

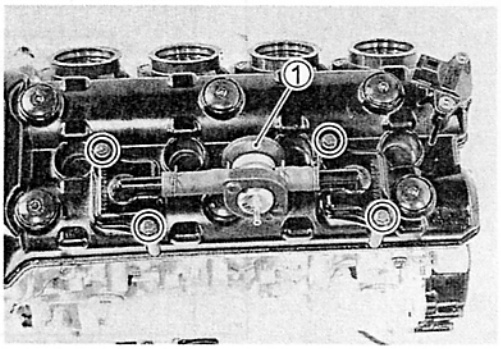

CYLINDER HEAD COVER

- Remove the cylinder head cover and its gaskets.

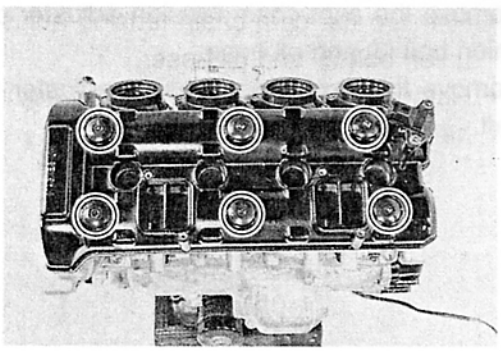

- Remove the dowel pins and O-rings.

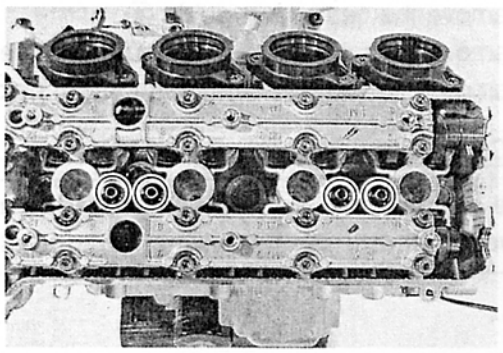

CAMSHAFTS

- Remove the valve timing inspection cap ①.

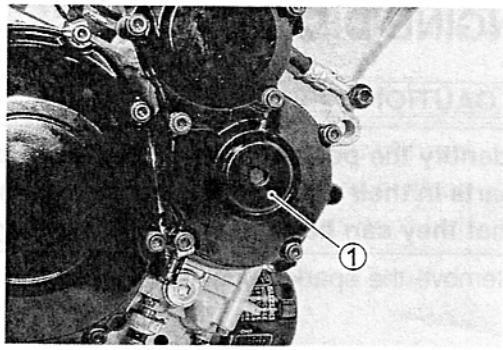

- Turn the crankshaft to bring the line Ⓐ on the starter clutch to the index mark Ⓑ of the valve timing inspection hole and also to bring the cams to the position as shown.

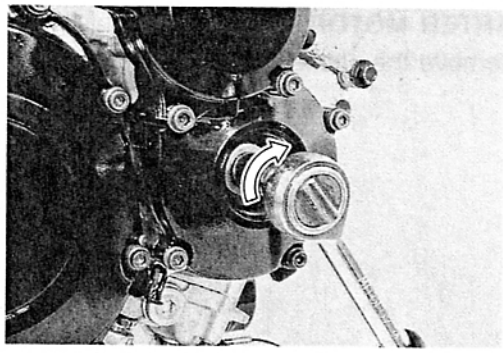

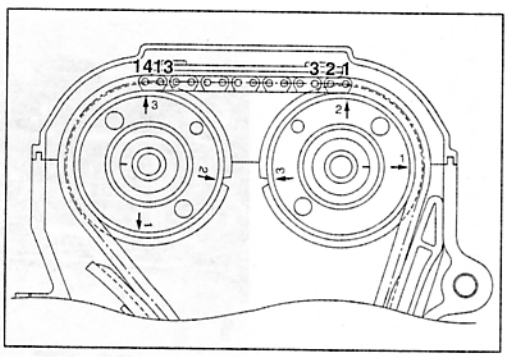

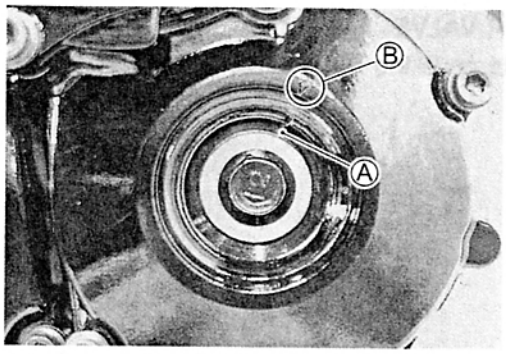

- Remove the cam chain tension adjuster cap bolt ②, oil hose union bolt ③ and oil hose.
- Remove the cam chain tension adjuster with the spring and ball.

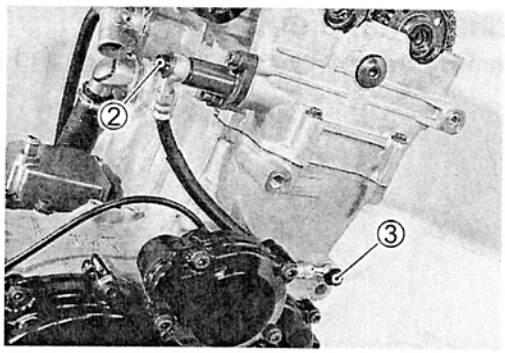

- Remove the cam chain guide ④.
- Remove the intake camshaft journal holder ⑤.
- Remove the exhaust camshaft journal holder ⑥.

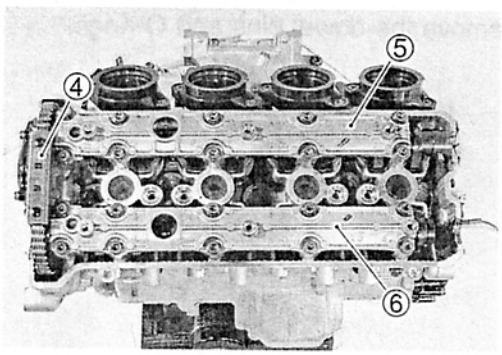

⚠ CAUTION

Be sure to loosen the camshaft journal holder bolts evenly by shifting the wrench diagonally.

- Remove the intake camshaft ①.
- Remove the exhaust camshaft ②.

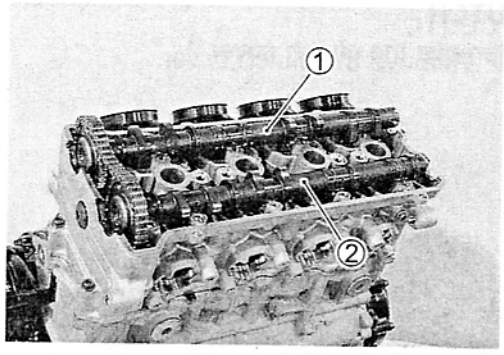

CYLINDER HEAD

- Remove the water hose ①.
- Remove the thermostat cover ② and thermostat.

THERMOSTAT INSPECTION: ☞5-9

- Remove the engine coolant temp. gauge ③.

ENGINE COOLANT TEMP. GAUGE INSPECTION: ☞5-8

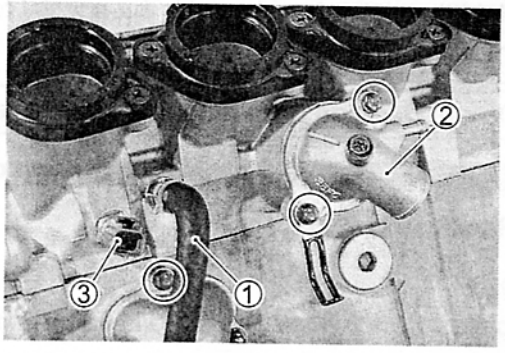

- Remove the cylinder head side bolt ④ and its gasket.

⚠ CAUTION

When removing the cylinder head side bolt, pull the cam chain upward, or the chain will be caught between the cylinder head and the side bolt.

- Remove the cylinder head bolts (M6) ⑤.

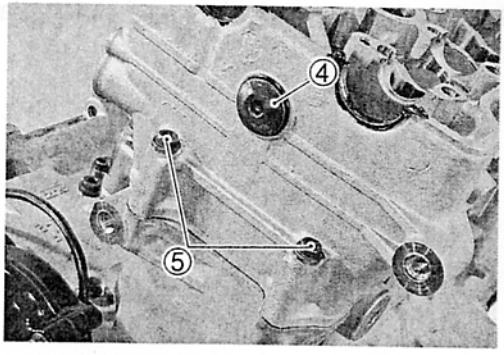

- Remove the cylinder head bolts and washers.

NOTE:

When loosening the cylinder head bolts, loosen each bolt little by little diagonally.

- Remove the cylinder head.

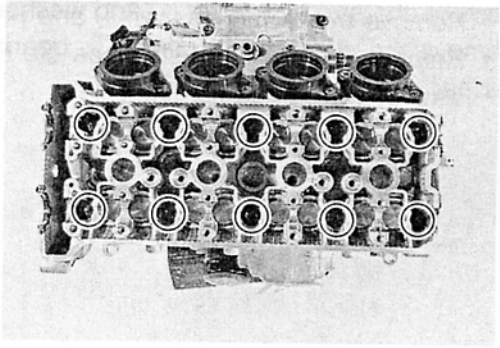

CLUTCH

- Remove the clutch cover.

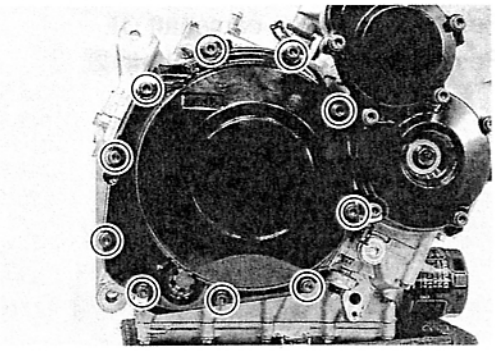

- Hold the clutch housing with the special tool.

⚠ CAUTION

Do not damage the clutch plates by the special tool.

09920-53740: Clutch sleeve hub holder

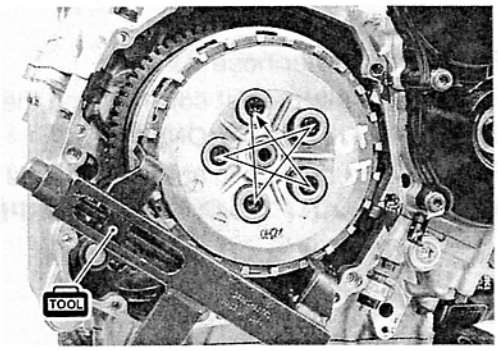

- Remove the clutch springs.

NOTE:
Loosen the clutch spring set bolts little by little and diagonally.

- Remove the pressure plate and clutch plates.

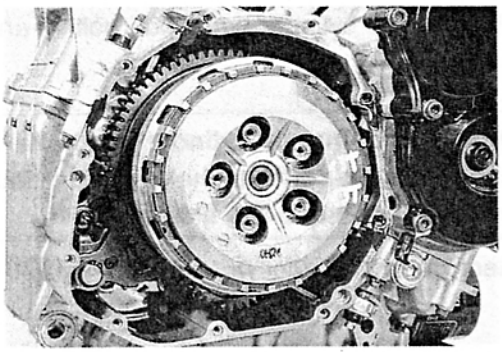

- Remove the spring washer ① and washer ②.
- Remove the clutch push piece ③, bearing ④ and the thrust washer ⑤.

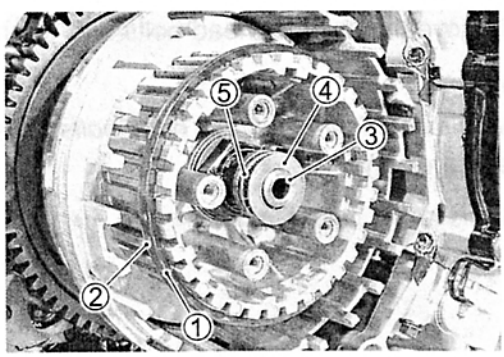

- Remove the clutch push rod ⑥.

NOTE:
If it is difficult to pull out the push rod ⑥, use a magnetic hand or a wire.

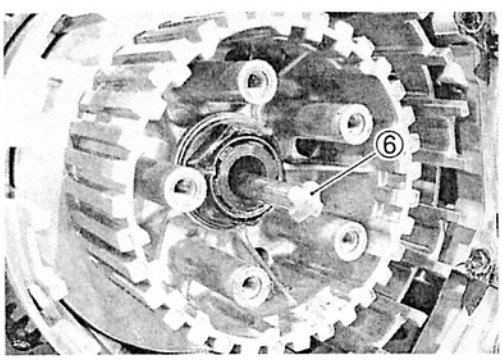

- Unlock the clutch sleeve hub nut.

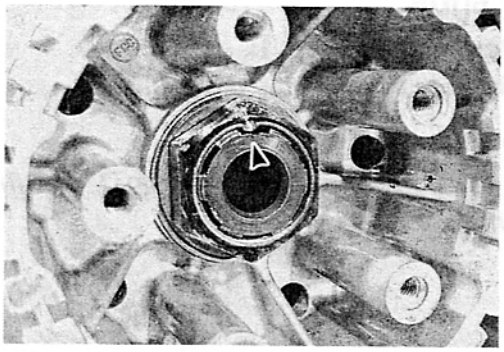

- Hold the clutch sleeve hub with the special tool.

TOOL **09920-53740: Clutch sleeve hub holder**

- Remove the clutch sleeve hub nut.

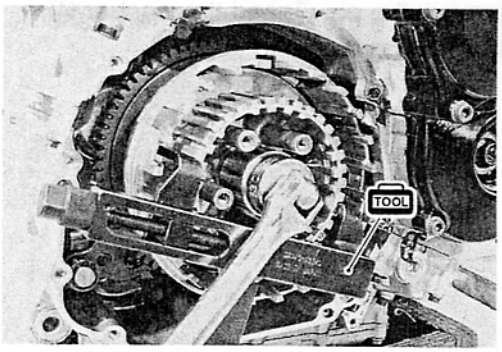

- Remove the wave washer ① washer ②, clutch sleeve hub ③ and washer ④.

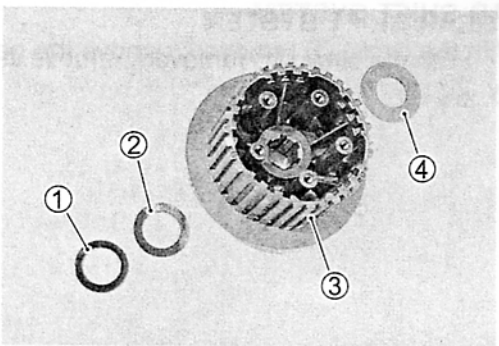

- Remove the spacer ⑤ and bearing ⑥.
- Remove the primary driven gear assembly ⑦.

NOTE:
If it is difficult to remove the primary driven gear, rotate the crankshaft.

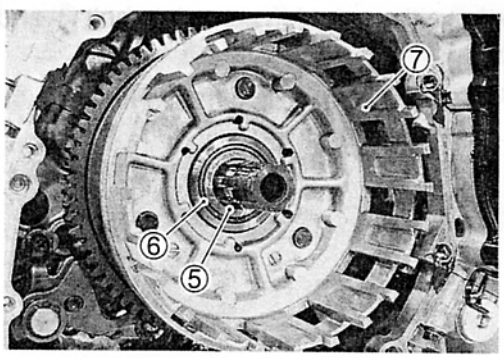

- Remove the oil pump drive gear ⑧ from the primary driven gear assembly ⑦.
- Remove the thrust washer ⑨.

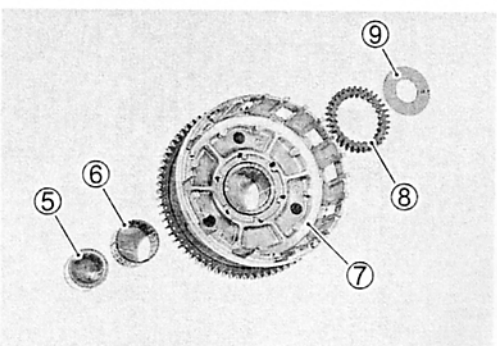

OIL PUMP

- Remove the circlip ①.
- Remove the oil pump driven gear ②.

NOTE:
Do not drop the circlip ①, the pin ③ and the washer ④ into the crankcase.

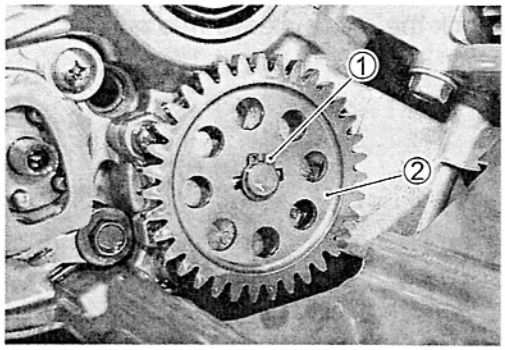

- Remove the pin ③ and the washer ④.
- Remove the oil pump ⑤.

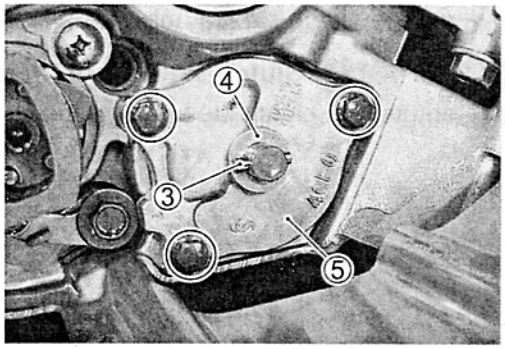

GEAR SHIFT SYSTEM

- With the circlip ① removed, remove the gearshift shaft assembly ②.

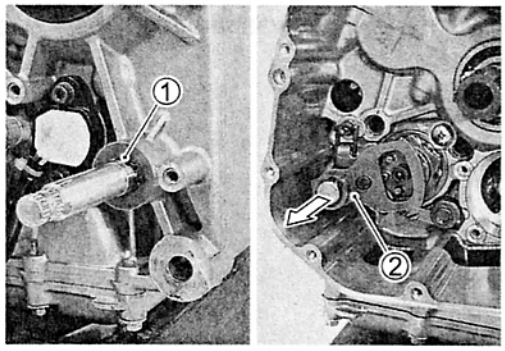

- Remove the gearshift cam plate bolt ③ and gearshift cam plate ④.
- Remove the gearshift cam stopper ⑤.

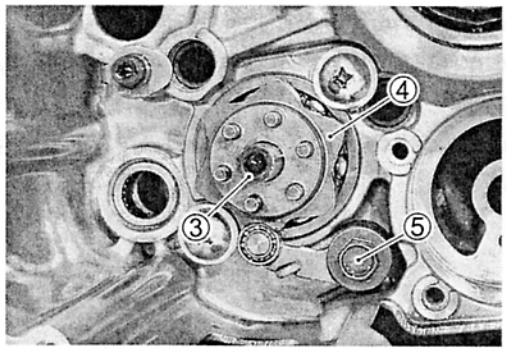

STARTER IDLE GEAR

- Remove the starter idle gear cover.

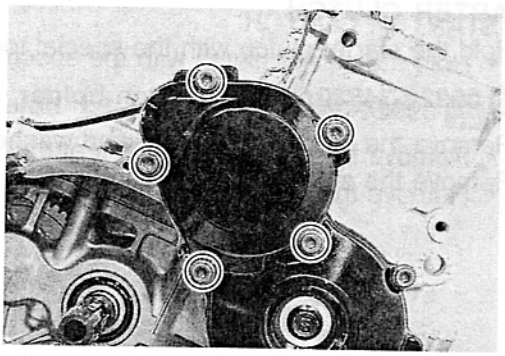

- Remove the shaft ①, wave washer ② washer ③ starter idle gear No.1 ④, bearing ⑤ and washer ⑥.

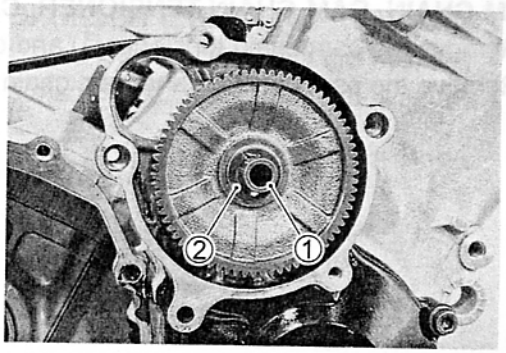

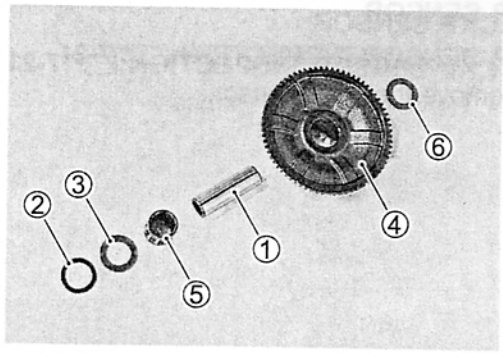

- Remove the starter clutch cover.

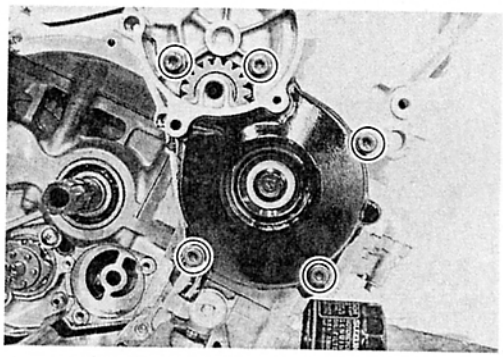

- Remove the wave washer ①, the starter idle gear No.2 ② and its shaft ③.

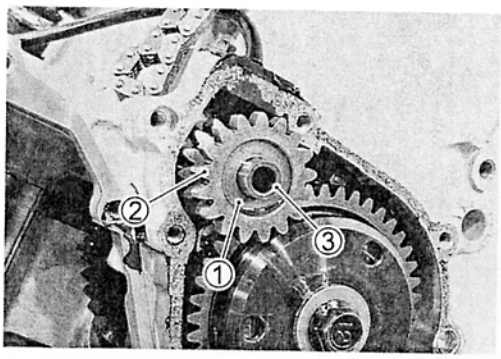

STARTER CLUTCH

- Hold the starter clutch with the special tool.

TOOL 09920-34830: Starter clutch holder

- Remove the starter clutch bolt and washer.
- Remove the starter clutch assembly and washer.

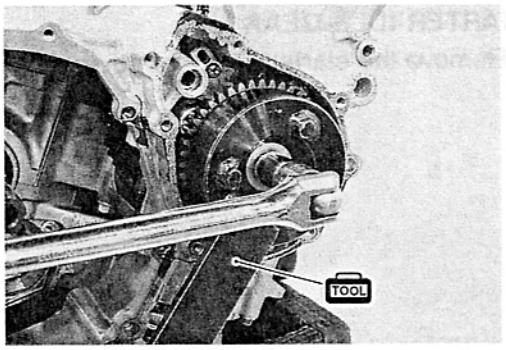

CAM CHAIN, CAM CHAIN TENSIONER, CAM CHAIN GUIDE

- Remove the cam chain tensioner ① and cam chain guide ②.
- Remove the cam chain ③ and cam chain drive sprocket ④.

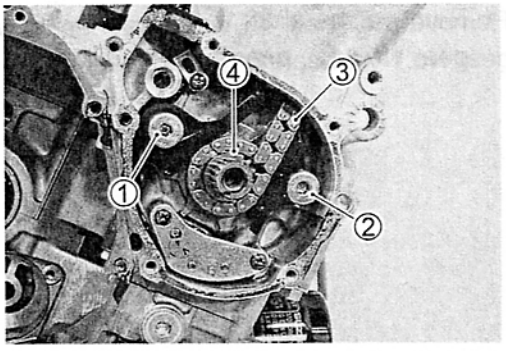

CKP SENSOR

CKP SENSOR INSPECTION:☞7-21

- Remove the CKP sensor.

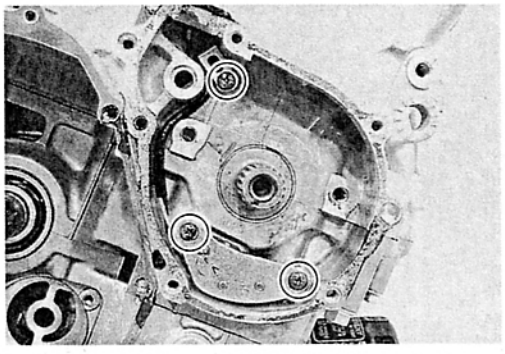

GENERATOR COVER

- Remove the generator cover.

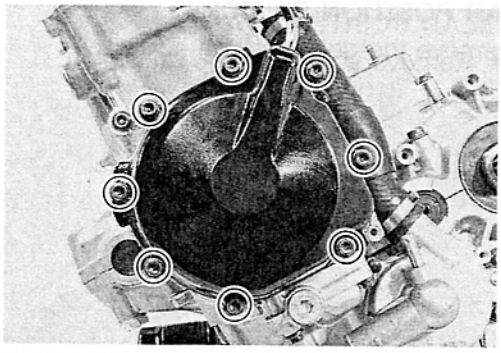

GENERATOR ROTOR

- Hold the generator rotor with the special tool.

TOOL **09930-44520: Rotor holder**

- Loosen the generator rotor bolt.

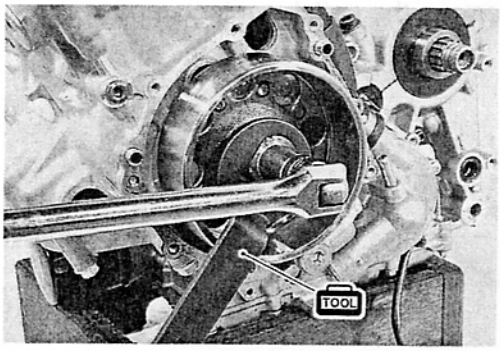

- Install a suitable bolt Ⓐ to the left end of crankshaft.

SUITABLE BOLT Ⓐ [M12, length: 28 – 38 mm]

- Remove the generator rotor with the special tool.

TOOL **09930-34980: Rotor remover**

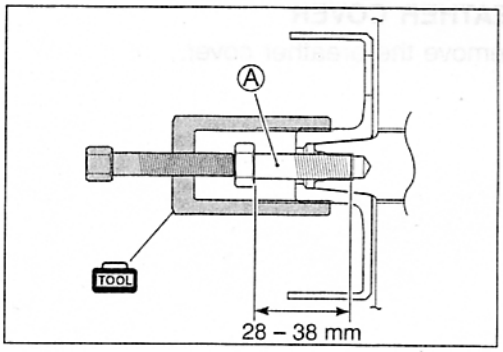

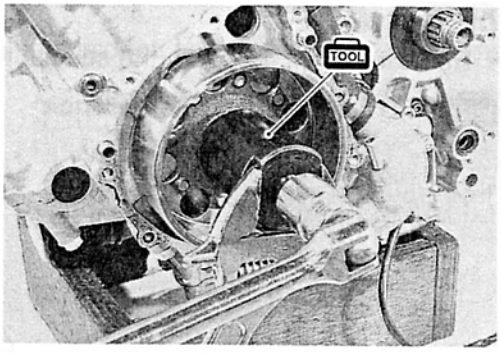

WATER PUMP

- Remove the water hose ① and inlet cover ②.
- Remove the water pump ③.

WATER PUMP SERVICING: ☞**5-11**

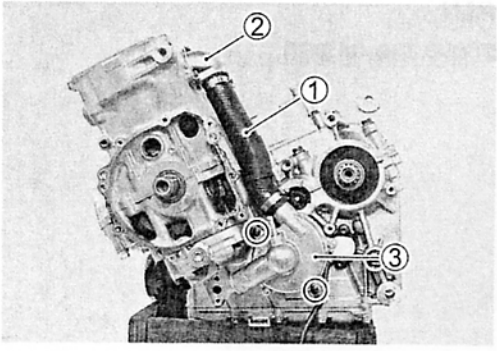

GEAR POSITION SWITCH

- Remove the gear position switch.

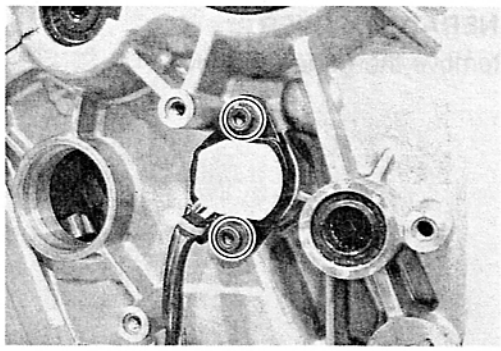

- Remove the switch contacts and springs.

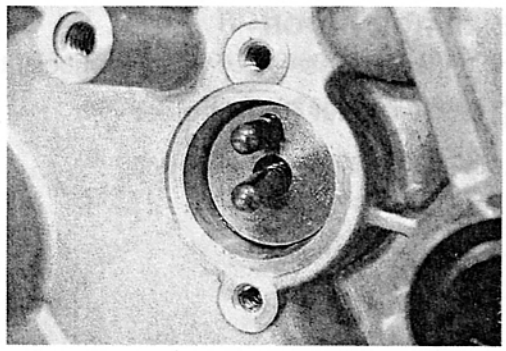

BREATHER COVER

- Remove the breather cover.

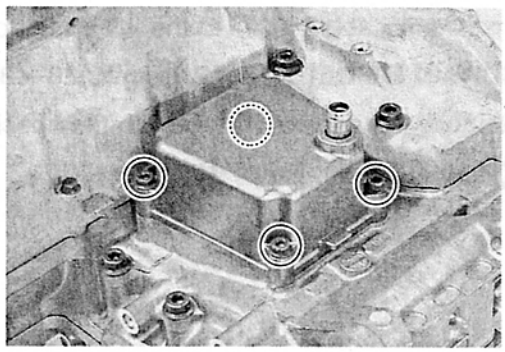

OIL FILTER

- Remove the oil filter with the special tool. (☞ 2-13)

TOOL **09915-40610: Oil filter wrench**

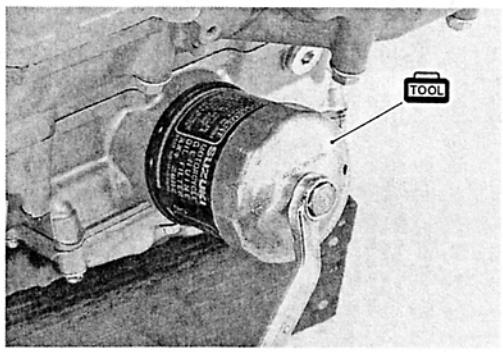

OIL PAN

- Remove the oil pan.

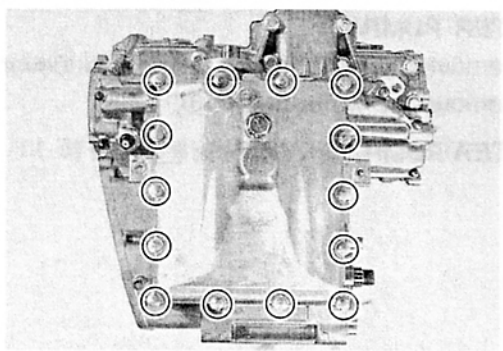

OIL PRESSURE REGULATOR

- Remove the oil pressure regulator ①.

OIL PRESSURE SWITCH

- Remove the oil pressure switch ②.

OIL STRAINER

- Remove the oil strainer ③ and O-ring.

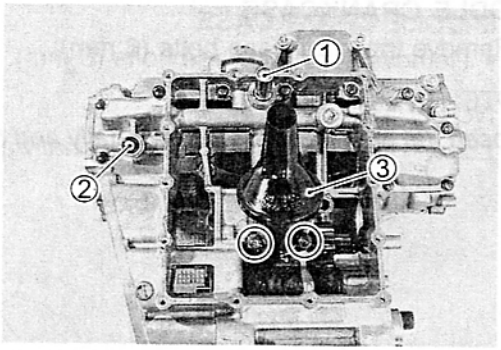

LOWER CRANK CASE

- Remove the lower crankcase bolts (6 mm).

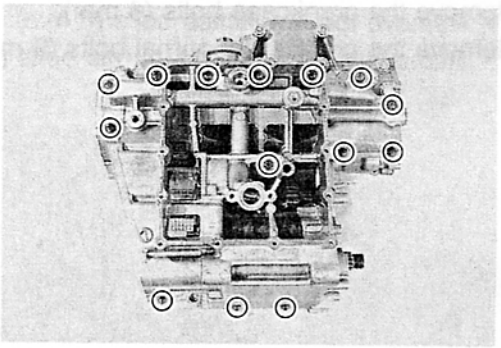

- Remove the lower crankcase bolts (8 mm).
- Remove the lower crankcase assembly.

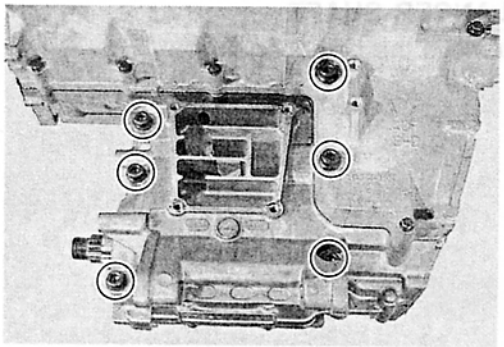

TRANSMISSION

- Remove the transmission and O-rings.

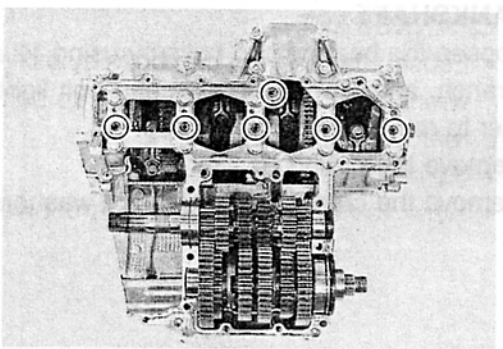

MIDDLE CRANKCASE

- Remove the crankcase bolts (6 mm).

NOTE:
Loosen the crankcase bolts diagonally and the smaller sizes first.

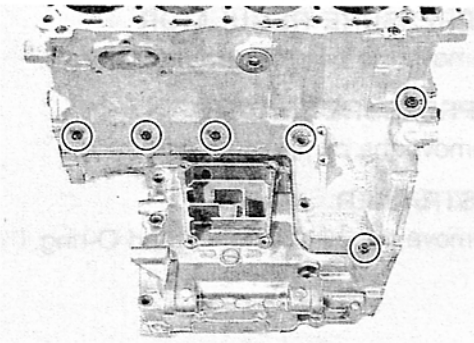

- Remove the crankcase bolts (8 mm).
- Remove the crankshaft journal bolts (9 mm).

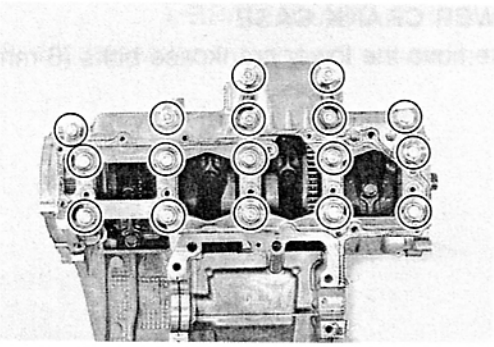

BALANCER SHAFT

- Remove the balancer shaft.

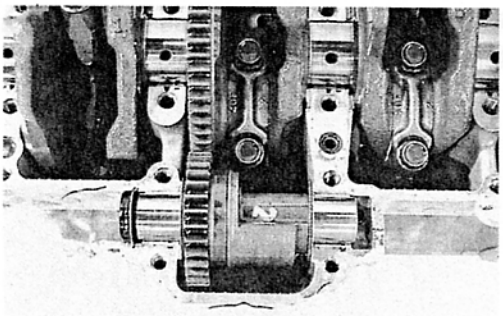

CRANKSHAFT

- Loosen the bearing cap bolts by using 12 mm, 12 point socket wrench, and tap the bearing cap bolt lightly with plastic hammer to remove the bearing cap.
- Remove the O-ring ①.
- Remove the crankshaft and thrust washers ②.

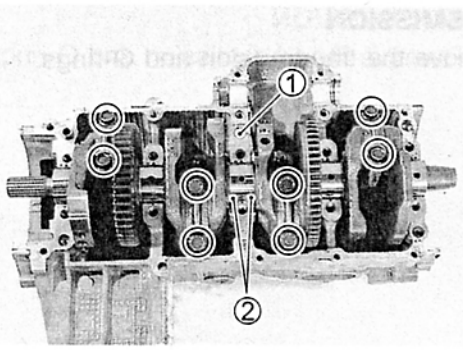

PISTON AND CONROD

- Push the conrod to upward and remove the piston and conrod from the upper crankcase.

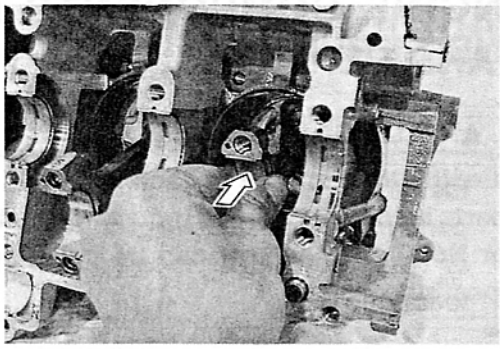

⚠ CAUTION

Be careful not to damage the cylinder wall by the conrod.

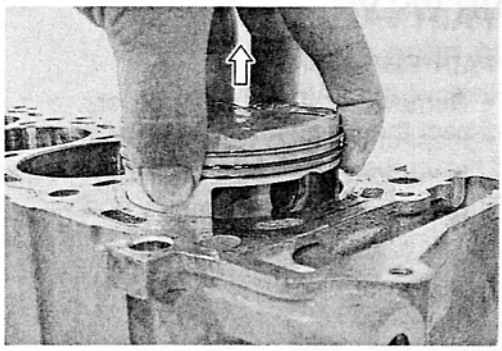

- Remove the piston pin circlip.
- Separate the piston and conrod by driving out the piston pin.

NOTE:

Scribe the cylinder number on the head of the piston.

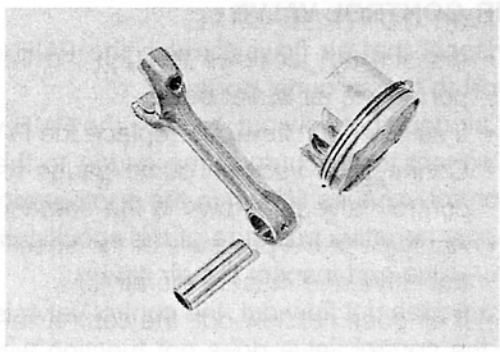

ENGINE COMPONENTS INSPECTION AND SERVICE

⚠ CAUTION

Identify the position of each removed part. Organize the parts in their respective groups (i.e., intake, exhaust, No.1 or No.2) so that they can be installed in their original locations.

PAIR VALVE

PAIR REED VALVE

- Remove the PAIR valve cover.
- Inspect the reed valve for the carbon deposit.
- If the carbon deposit is found in the reed valve, replace the PAIR control valve with a new one.

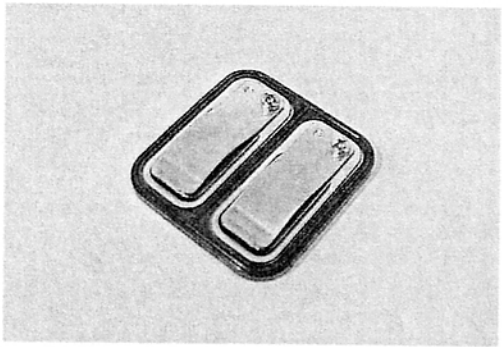

PAIR CONTROL VALVE

- Inspect that air flows through the PAIR control valve air inlet port to the air outlet ports.
- If air does not flow out, replace the PAIR valve with a new one.
- Connect the vacuum pump gauge to the vacuum port of the control valve as shown in the photograph.
- Apply negative pressure of the specification slowly to the control valve and inspect the air flow.
- If air does not flow out, the control valve is in normal condition.
- If the control valve does not function within the specification, replace the control valve with a new one.

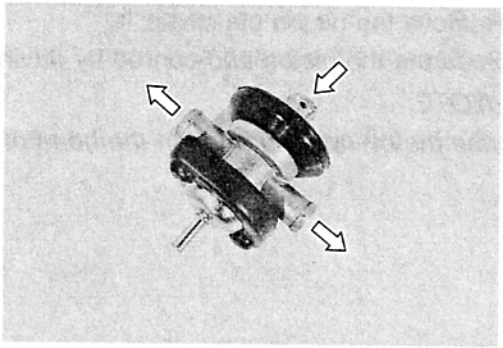

DATA Negative pressure range: More than 66.6 kPa (491 mmHg)

TOOL 09917-47010: Vacuum pump gauge

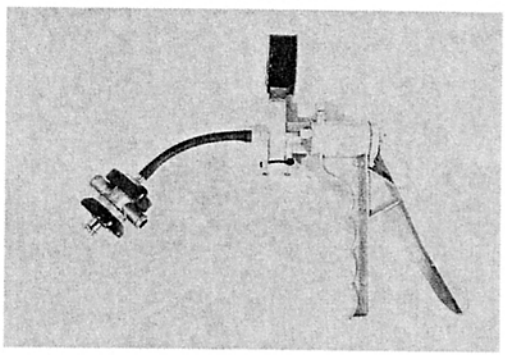

⚠ CAUTION

Use a hand operated vacuum pump to prevent the control valve damage.

CYLINDER HEAD COVER

CAM POSITION SENSOR

- Install the oil seal ① and cam position sensor ②.

NOTE:
When installing, clean the cam position sensor's face.

Cam position sensor bolt: 8 N·m (0.8 kgf·m, 5.8 lb-ft)

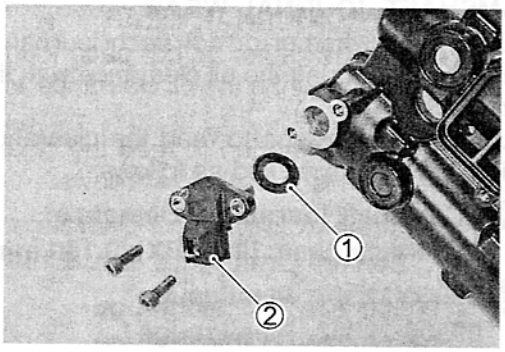

CAMSHAFT

CAMSHAFT IDENTIFICATION

The exhaust camshaft can be distinguished from that of the intake by the embossed letters "EX" (for exhaust) as against letters "IN" (for intake).

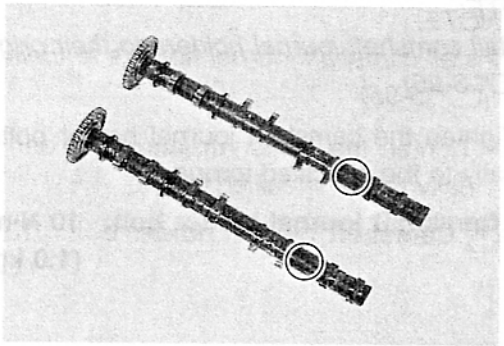

CAM WEAR

- Check the camshaft for wear or damage.
- Measure the cam height Ⓗ with a micrometer.

09900-20202: Micrometer (25 – 50 mm)

Cam height Ⓗ:
Service Limit: (IN.) : 36.71 mm (1.445 in)
(EX.) : 35.68 mm (1.405 in)

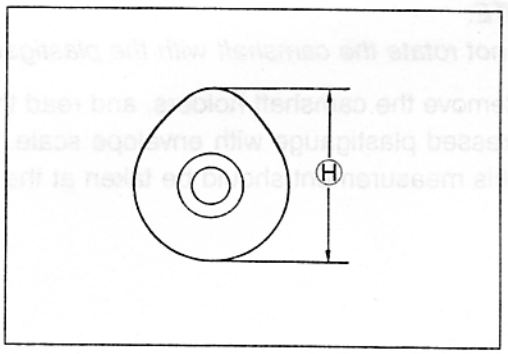

CAMSHAFT JOURNAL WEAR

- Determine whether or not each journal is worn down to the limit by measuring the oil clearance with the camshaft installed in place.
- Use the plastigauge to read the clearance at the widest portion, which is specified as follows:

DATA Camshaft journal oil clearance:
Service Limit: (IN & EX): 0.150 mm (0.0059 in)

TOOL 09900-22301: Plastigauge
09900-22302: Plastigauge

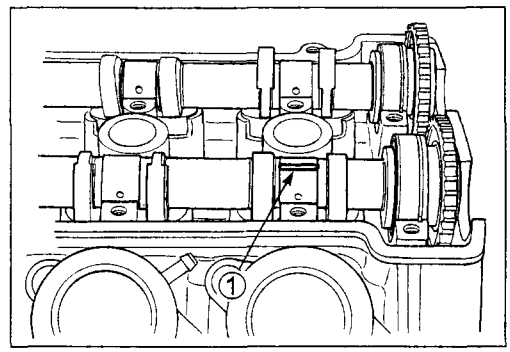

NOTE:
Install camshaft journal holders to their original positions.
(☞ 3-95)

- Tighten the camshaft journal holder bolts evenly and diagonally to the specified torque.

Camshaft journal holder bolt: 10 N·m
(1.0 kgf·m, 7.0 lb-ft)

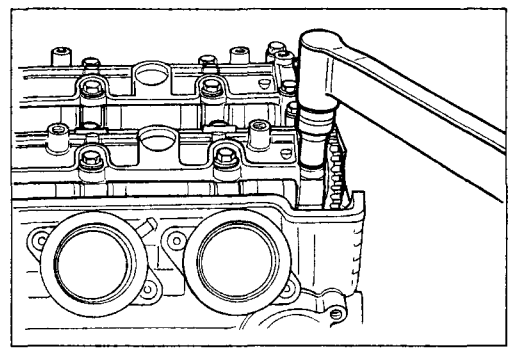

NOTE:
Do not rotate the camshaft with the plastigauge in place.

- Remove the camshaft holders, and read the width of the compressed plastigauge with envelope scale.
- This measurement should be taken at the widest part.

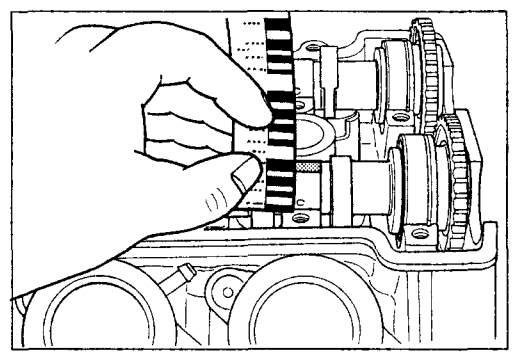

- If the camshaft journal oil clearance measured exceeds the limit, measure the inside diameter of the camshaft journal holder and outside diameter of the camshaft journal.
- Replace the camshaft or the cylinder head depending upon which one exceeds the specification.

DATA Journal holder I.D.:
Standard: (IN & EX): 24.012 – 24.025 mm
(0.9454 – 0.9459 in)

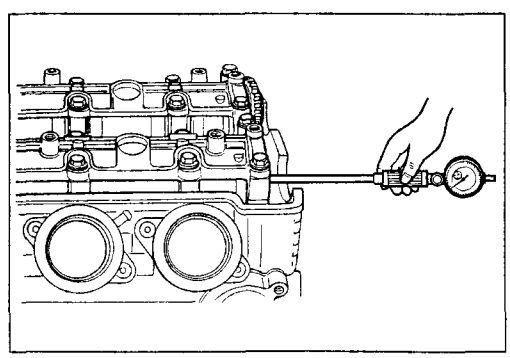

TOOL 09900-20602: Dial gauge (1/1000, 1 mm)
09900-22403: Small bore gauge (18 – 35 mm)

DATA Camshaft journal O.D.:
Standard (IN & EX): 23.959 – 23.980 mm
(0.9433 – 0.9441 in)

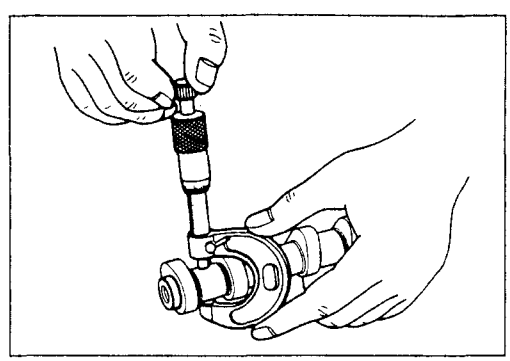

TOOL 09900-20205: Micrometer (0 – 25 mm)

CAMSHAFT RUNOUT

- Measure the runout using the dial gauge.
- Replace the camshaft if the runout exceeds the limit.

TOOL 09900-20606: Dial gauge (1/100 mm)
09900-20701: Magnetic stand
09900-21304: V-block set (100 mm)

DATA Camshaft runout:
Service Limit (IN & EX): 0.10 mm (0.004 in)

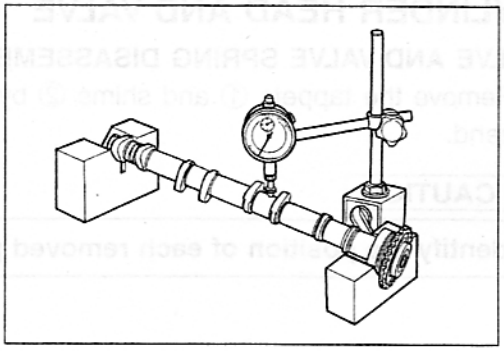

CAM SPROCKET

- Inspect the sprocket teeth for wear.
- If they are worn, replace the sprocket/camshaft assembly and cam chain as a set.

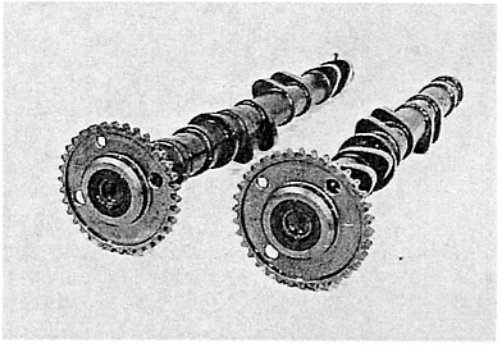

CAM CHAIN TENSION ADJUSTER

INSPECTION

- Remove the cam chain tension adjuster cap bolt.
- Check that the push rod slides smoothly when releasing stopper.
- If it does not slide smoothly, replace the cam chain tension adjuster with a new one.

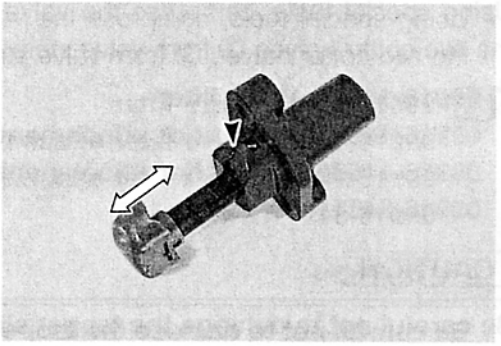

CAM CHAIN TENSIONER

INSPECTION

- Check the contacting surface of the cam chain tensioner.
- If it is worn or damaged, replace it with a new one.

CAM CHAIN GUIDE

INSPECTION

- Check the contacting surfaces of the cam chain guides.
- If they are worn or damaged, replace them with the new ones.

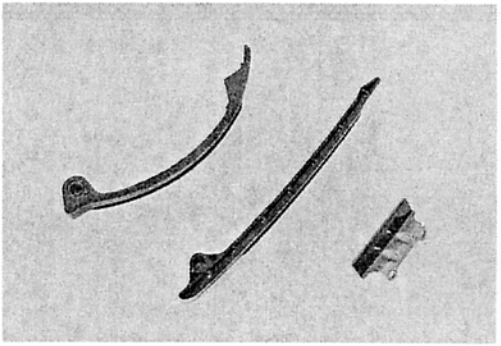

CYLINDER HEAD AND VALVE

VALVE AND VALVE SPRING DISASSEMBLY

- Remove the tappets ① and shims ② by fingers or magnetic hand.

⚠ CAUTION

Identify the position of each removed part.

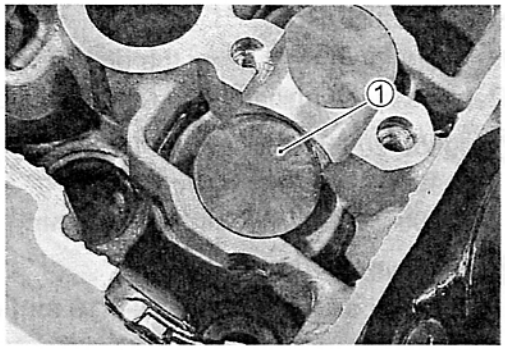

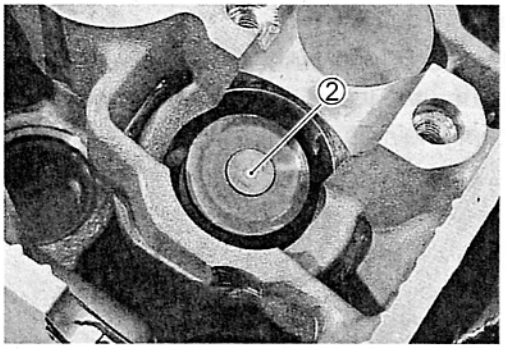

- Using special tools, compress the valve springs and remove the two cotter halves ③ from valve stem.

TOOL **09916-14510: Valve lifter**
09916-14521: Valve lifter attachment (IN.)
09916-14530: Valve lifter attachment (EX.)
09916-84511: Tweezers

⚠ CAUTION

Be careful not to damage the tappet sliding surface with the special tool.

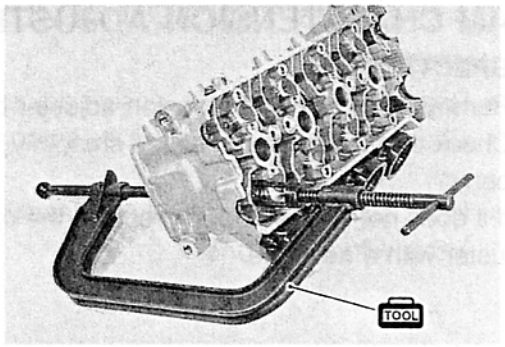

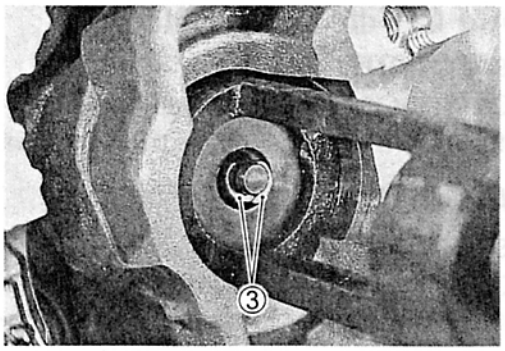

- Remove the valve spring retainer ④ and valve springs ⑤.
- Pull out the valve from the other side.

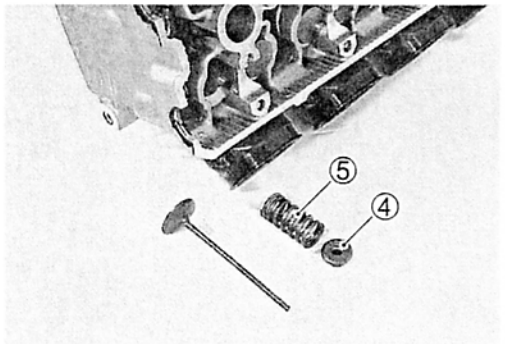

- Remove the oil seal ① and the spring seat ②.

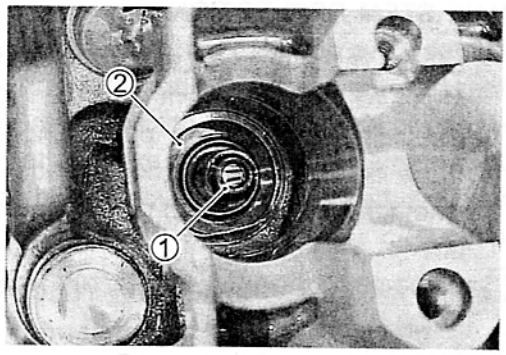

⚠ CAUTION

Do not reuse the removed oil seal.

- Remove the other valves in the same manner as described previously.

CYLINDER HEAD DISTORTION

- Decarbonize the combution chambers.
- Check the gasketed surface of the cylinder head for distortion with a straightedge and thickness gauge, taking a clearance reading at several places indicated.
- If the largest reading at any position of the straightedge exceeds the limit, replace the cylinder head.

TOOL **09900-20803: Thickness gauge**

DATA **Cylinder head distortion:**
Service Limit: 0.20 mm (0.008 in)

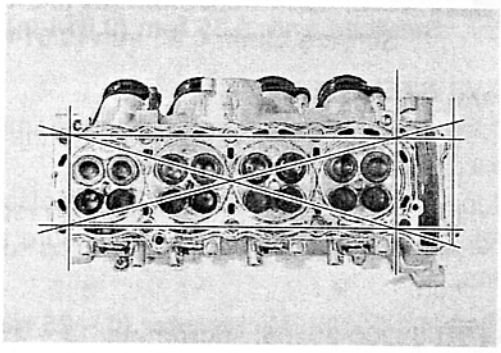

VALVE STEM RUNOUT

- Support the valve using V-blocks and check its runout using the dial gauge as shown.
- If the runout exceeds the service limit, replace the valve.

TOOL **09900-20606: Dial gauge (1/100 mm)**
09900-20701: Magnetic stand
09900-21304: V-block set (100 mm)

DATA **Valve stem runout:**
Service Limit: 0.05 mm (0.002 in)

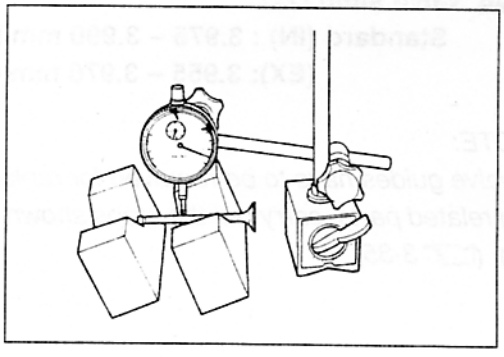

VALVE HEAD RADIAL RUNOUT

- Place the dial gauge at a right angle to the valve head face and measure the valve head radial runout.
- If it measures more than the service limit, replace the valve.

TOOL **09900-20606: Dial gauge (1/100 mm)**
09900-20701: Magnetic stand
09900-21304: V-block set (100 mm)

DATA **Valve head radial runout:**
Service Limit: 0.03 mm (0.001 in)

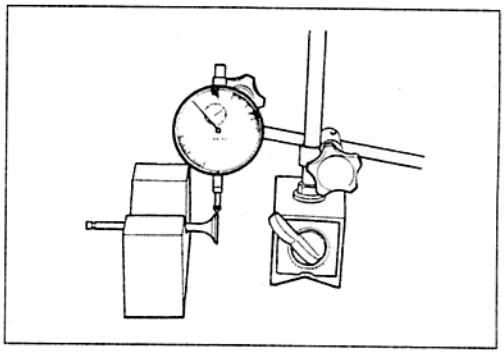

VALVE FACE WEAR

- Visually inspect each valve face for wear. Replace any valve with an abnormally worn face. The thickness of the valve face decreases as the face wears. Measure the valve face Ⓣ. If it is out of specification, replace the valve with a new one.

TOOL **09900-20102: Vernier calipers**

DATA **Valve head thickness Ⓣ:**
Service Limit: 0.5 mm (0.02 in)

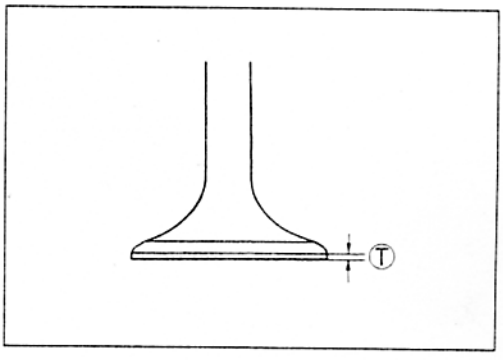

VALVE STEM DEFLECTION

- Lift the valve about 10 mm (0.39 in) from the valve seat.
- Measure the valve stem deflection in two directions, perpendicular to each other, by positioning the dial gauge as shown.
- If the deflection measured exceeds the limit, then determine whether the valve or the guide should be replaced with a new one.

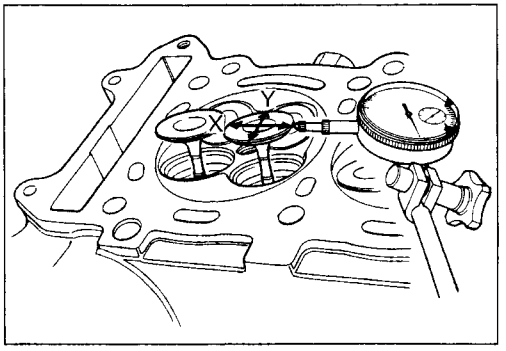

TOOL 09900-20606: Dial gauge (1/100 mm)
09900-20701: Magnetic stand

DATA Valve stem deflection (IN & EX):
Service Limit: 0.35 mm (0.014 in)

VALVE STEM WEAR

- If the valve stem is worn down to the limit, as measured with a micrometer, replace the valve.
- If the stem is within the limit, then replace the guide.
- After replacing valve or guide, be sure to recheck the deflection.

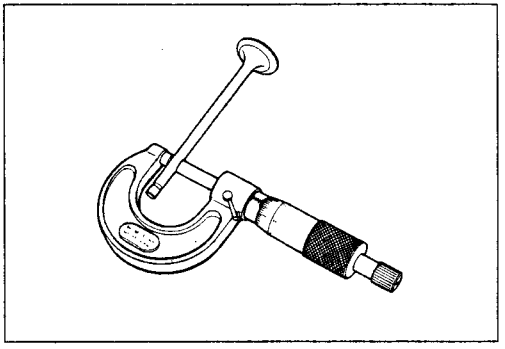

TOOL 09900-20205: Micrometer (0 – 25 mm)

DATA Valve stem O.D.:
Standard (IN) : 3.975 – 3.990 mm (0.1565 – 0.1571 in)
(EX): 3.955 – 3.970 mm (0.1557 – 0.1563 in)

NOTE:
If valve guides have to be removed for replacement after inspecting related parts, carry out the steps shown in valve guide servicing. (☞ 3-35)

VALVE GUIDE SERVICING

- Using the valve guide remover, drive the valve guide out toward the intake or exhaust camshaft side.

TOOL 09916-53310: Valve guide remover/installer

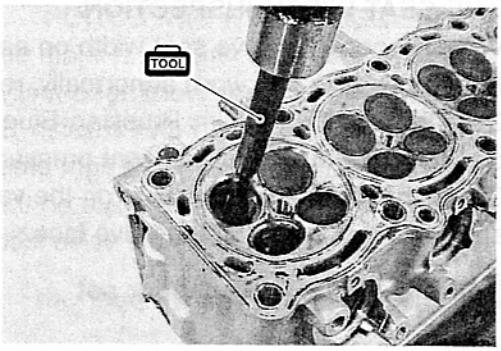

NOTE:

* *Discard the removed valve guide subassemblies.*

* *Only oversized valve guides are available as replacement parts. (Part No. 11115-11D70)*

- Re-finish the valve guide holes in cylinder head with the reamer and handle.

TOOL 09916-49030: Valve guide reamer
09916-34542: Reamer handle

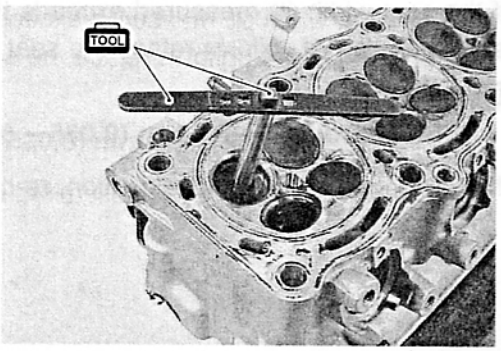

⚠ CAUTION

When refinishing or removing the reamer from the valve guide hole, always turn it clockwise.

- Apply engine oil to the valve guide hole.
- Drive the valve guide into the hole using the valve guide installer ① and attachment ②.

TOOL 09916-53310: Valve guide installer/remover ①
09916-53321: Attachment ②

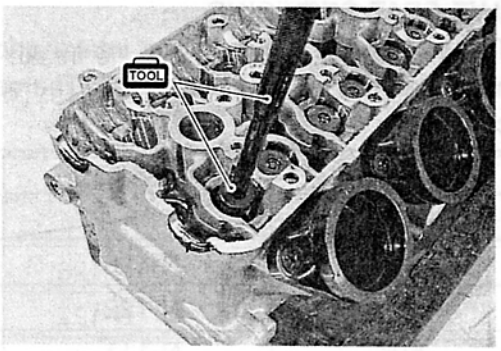

NOTE:

Install the valve guide until the attachment contacts with the cylinder head ③.

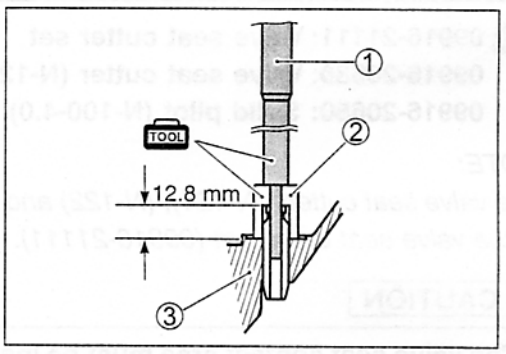

⚠ CAUTION

Failure to oil the valve guide hole before driving the new guide into place may result in a damaged guide or head.

- After installing the valve guides, re-finish their guiding bores using the reamer.
- Clean and oil the guides after reaming.

TOOL 09916-33310: Valve guide reamer
09916-34542: Valve guide reamer handle

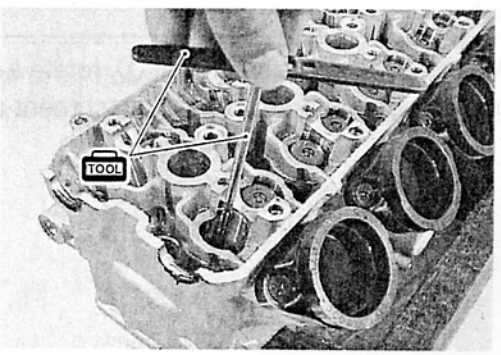

NOTE:

Insert the reamer from the combustion chamber and always turn the reamer handle clockwise.

VALVE SEAT WIDTH INSPECTION

- Visually check for valve seat width on each valve face.
- If the valve face has worn abnormally, replace the valve.
- Coat the valve seat with Prussian Blue and set the valve in place. Rotate the valve with light pressure.
- Check that the transferred blue on the valve face is uniform all around and in center of the valve face.

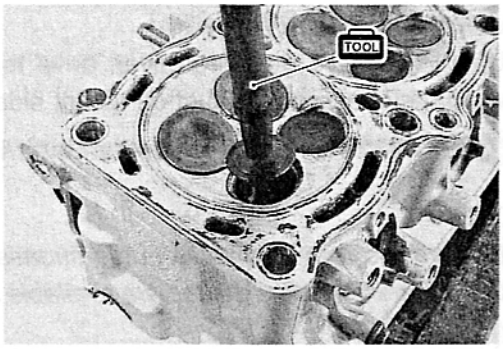

TOOL 09916-10911: Valve lapper set

- If the seat width Ⓦ measured exceeds the standard value, or seat width is not uniform reface the seat using the seat cutter.

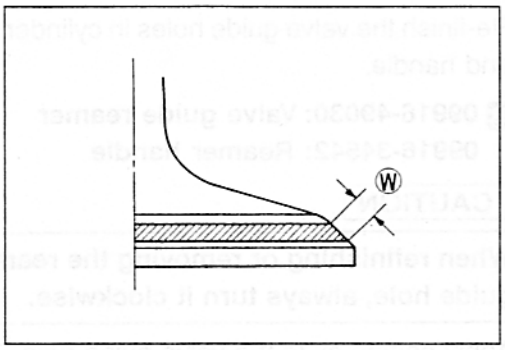

DATA Valve seat width Ⓦ:
Standard: 0.9 – 1.1 mm (0.035 – 0.043 in)

If the valve seat is out of specification, re-cut the seat.

VALVE SEAT SERVICING

- The valve seats for both the intake and exhaust valves are machined to four different angles. The seat contact surface is cut at 45°.

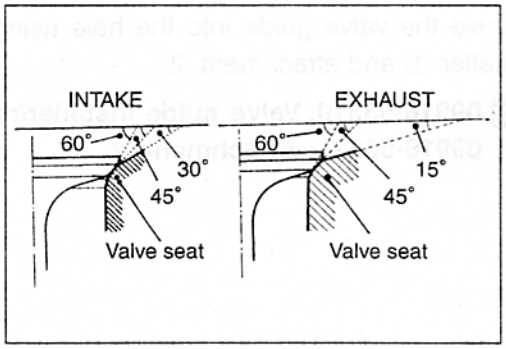

	INTAKE	EXHAUST
15°		N-121
30°	N-126	
45°	N-122	N-122
60°	N-111	N-111

TOOL 09916-21111: Valve seat cutter set
09916-20630: Valve seat cutter (N-126)
09916-20650: Solid pilot (N-100-4.0)

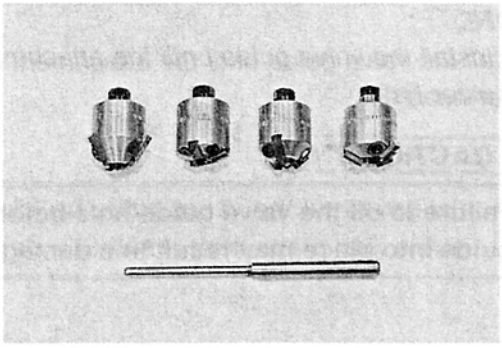

NOTE:
The valve seat cutters (N-121), (N-122) and (N-111) are included in the valve seat cutter set (09916-21111).

⚠ CAUTION

The valve seat contact area must be inspected after each cut.

- When installing the solid pilot ①, rotate it slightly. Seat the pilot snugly. Install the 45° cutter, attachment and T-handle.

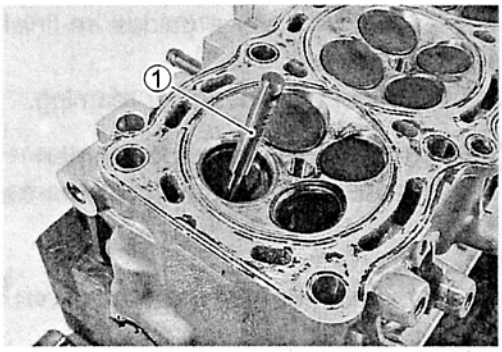

INITIAL SEAT CUT

- Using the 45° cutter, descale and clean up the seat. Rotate the cutter one or two turns.
- Measure the valve seat width Ⓦ after every cut.

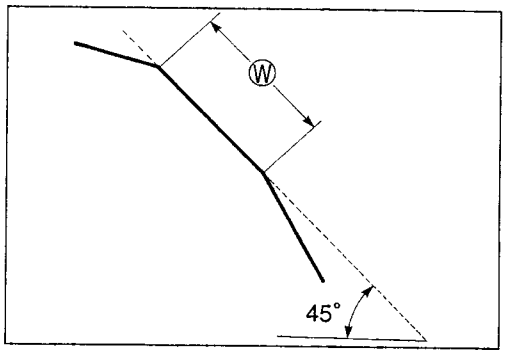

- If the valve seat is pitted or burned, use the 45° cutter to condition the seat some more.

NOTE:
Cut only the minimum amount necessary from the seat to prevent the possibility of the valve stem becoming too close to the camshaft.

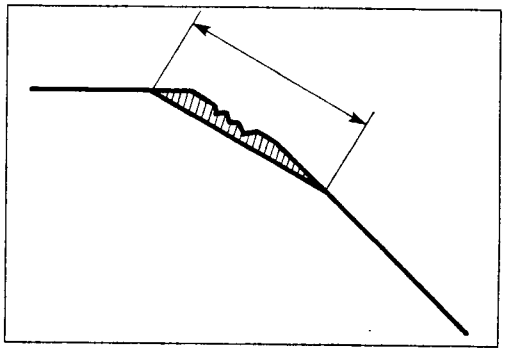

TOP NARROWING CUT

- If the contact area Ⓦ is too high on the valve, or if it is too wide, use the 15° (for the exhaust side) and the 30° (for the intake side) to lower and narrow the contact area.

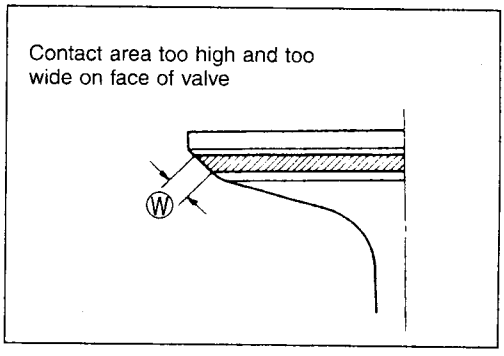

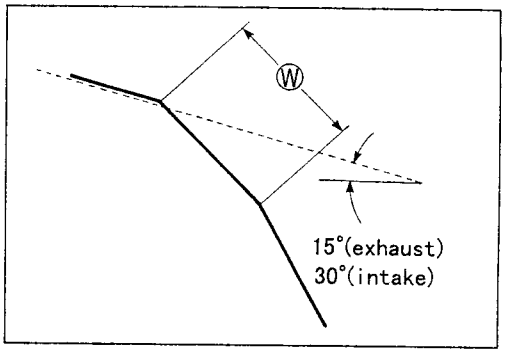

BOTTOM NARROWING CUT

- If the contact area Ⓦ is too wide or too low, use the 60° cutter to narrow and raise the contact area.

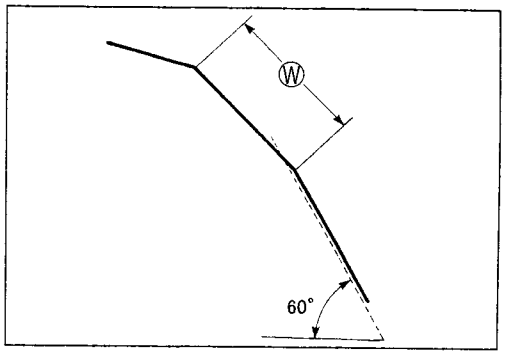

FINAL SEAT CUT

- If the contact area Ⓦ is too low or too narrow, use the 45° cutter to raise and widen the contact area.

NOTE:
After cutting the 15°, 30° and 60° angles, it is possible that the valve seat (45°) is too narrow. If so, re-cut the valve seat to the correct width.

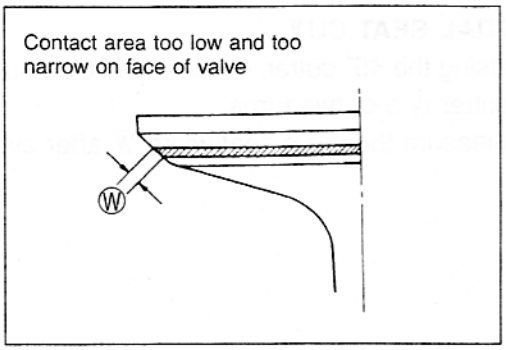

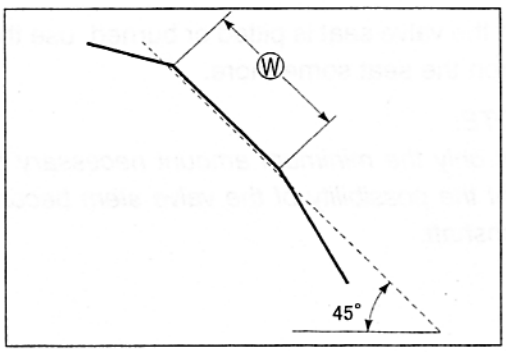

- After the desired seat position and width is achieved, use the 45° cutter very lightly to clean up any burrs caused by the previous cutting operations.

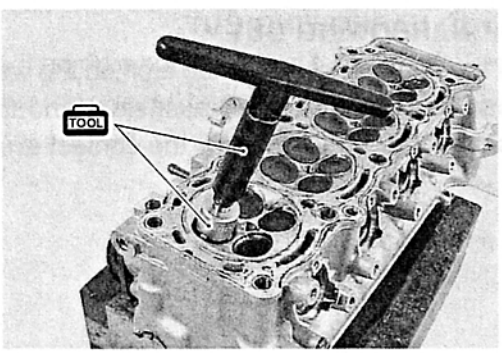

⚠ CAUTION

Do not use lapping compound after the final cut is made. The finished valve seat should have a velvety smooth finish but not a highly polished or shiny finish. This will provide a soft surface for the final seating of the valve which will occur during the first few seconds of engine operation.

NOTE:
After servicing the valve seats, be sure to check the valve clearance after the cylinder head has been reinstalled. (☞2-8)

- Clean and assemble the head and valve components. Fill the intake and exhaust ports with gasoline to check for leaks.
- If any leaks occur, inspect the valve seat and face for burrs or other things that could prevent the valve from sealing.

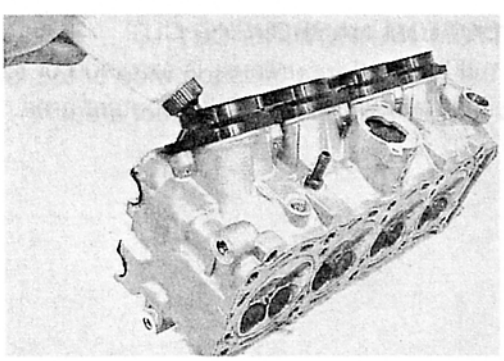

⚠ WARNING

Always use extreme caution when handling gasoline.

VALVE STEM END CONDITION

- Check the valve stem end face for pitting and wear.

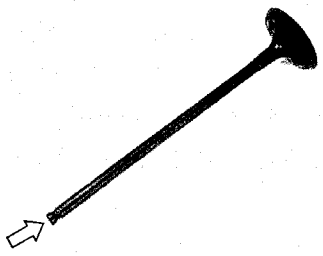

VALVE SPRING

The force of the coil springs keeps the valve seat tight. Weakened springs result in reduced engine power output, and often account for the chattering noise coming from the valve mechanism.

- Check the valve springs for proper strength by measuring their free length and also by the force required to compress them.
- If the spring length is less than the service limit, or if the force required to compress the spring does not fall within the range specified, replace both the inner and outer springs as a set.

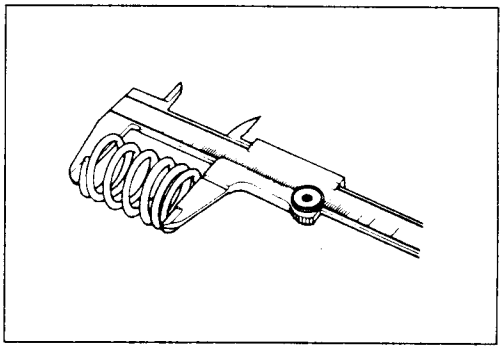

TOOL 09900-20102: Vernier calipers

DATA Valve spring free length (IN & EX):
Service limit: 37.0 mm (1.46 in)

DATA Valve spring tension:
Standard: (IN & EX):
127 – 147 N, 13.0 – 15.0 kgf/32.5 mm
(28.7 – 33.1 lbs/1.28 in)

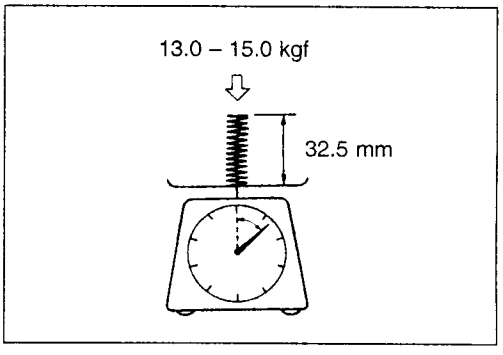

VALVE AND VALVE SPRING REASSEMBLY

- Install the valve spring seats.
- Apply molybdenum oil solution to each oil seal, and press-fit them into position with the valve guide installer.

TOOL 09916-44310: Valve guide remover/installer

MOLYBDENUM OIL SOLUTION

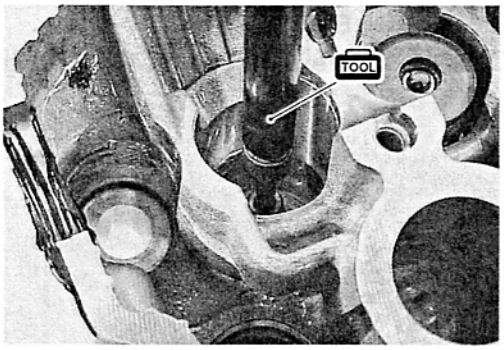

⚠ CAUTION

Do not reuse the removed oil seals.

- Insert the valves, with their stems coated with molybdenum oil solution all around and along the full stem length without any break.

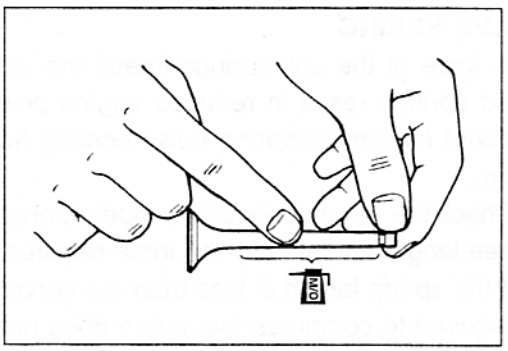

⚠ CAUTION

When inserting each valve, take care not to damage the lip of the oil seal.

MOLYBDENUM OIL SOLUTION

- Install the valve springs with the small-pitch portion Ⓐ facing cylinder head.

Ⓑ: Large-pitch portion

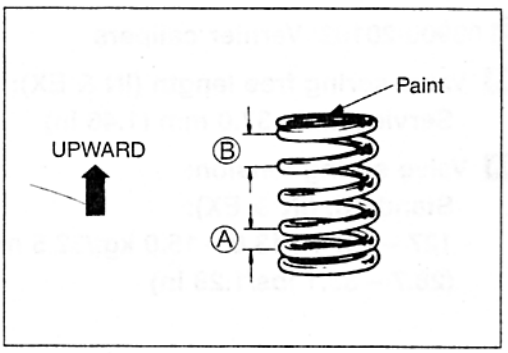

- Put on the valve spring retainer ①, and using the valve lifter, press down the springs, fit the cotter halves to the stem end, and release the lifter to allow the cotter ② to wedge in between retainer and stem. Be sure that the rounded lip Ⓐ of the cotter fits snugly into the groove Ⓑ in the stem end.

TOOL 09916-14510: Valve lifter
09916-14910: Valve lifter attachment
09916-84511: Tweezers

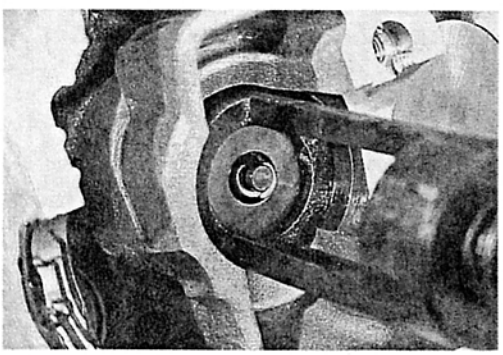

⚠ CAUTION

Be sure to restore each spring and valve to their original positions.

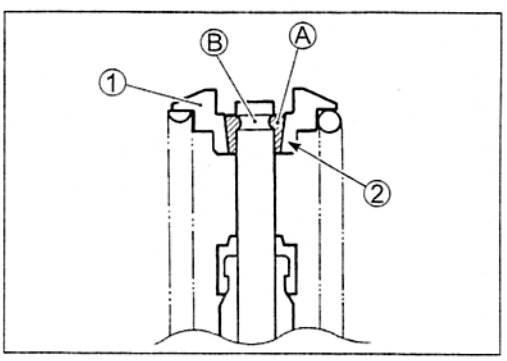

- Install the tappet shims and the tappets to their original position.

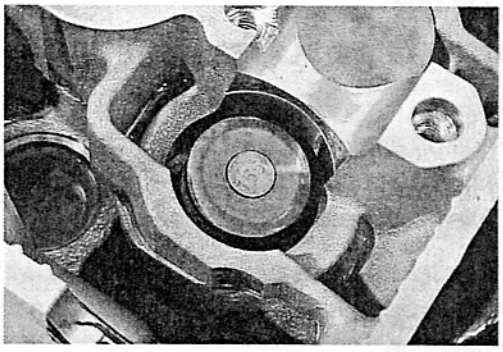

NOTE:

* *Apply engine oil to the shim and tappet before fitting them.*
* *When seating the tappet shim, be sure the figure printed surface faces the tappet.*

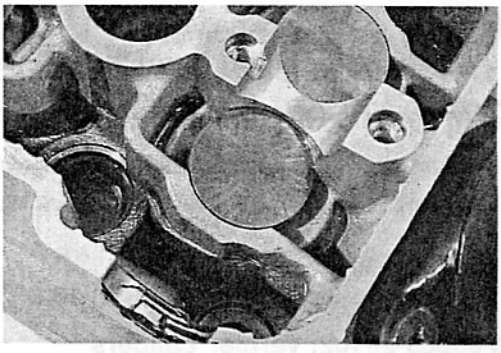

INTAKE PIPE

- Install the intake pipe in the following procedure.
- Apply THREAD LOCK "1342" to the screw and install the intake pipes.

1342 **99000-32050: THREAD LOCK "1342"**

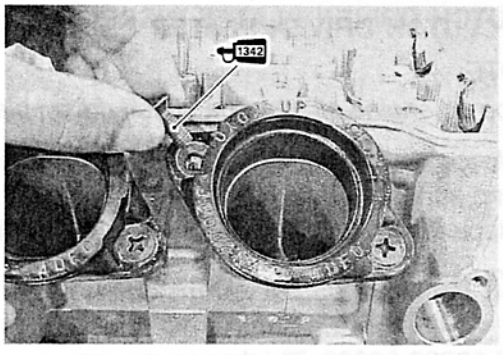

WATER BYPASS UNION

- Apply SUZUKI BOND "1207B" to the thread part of the water bypass union and tighten it to the specified torque.

1207B **99104-31140: SUZUKI BOND "1207B" (For USA)**
99000-31140: SUZUKI BOND "1207B" (For the others)

Water bypass union: 14 N·m (1.4 kgf·m, 10.0 lb-ft)

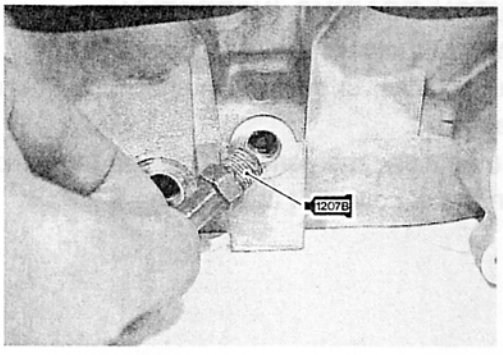

CLUTCH

CLUTCH DRIVE PLATES INSPECTION

NOTE:
* *Wipe off engine oil from the clutch drive plates with a clean rag.*
* *Clutch drive plate No.1: Green paint*
* *Clutch drive plate No.2: Brown paint*

- Measure the thickness of drive plates with a vernier calipers.
- If each drive plate thickness is less than the limit, replace it with a new one.

DATA Drive plate thickness:
Service Limit (No.1 and 2): 2.42 mm (0.095 in)

TOOL 09900-20102: Vernier calipers

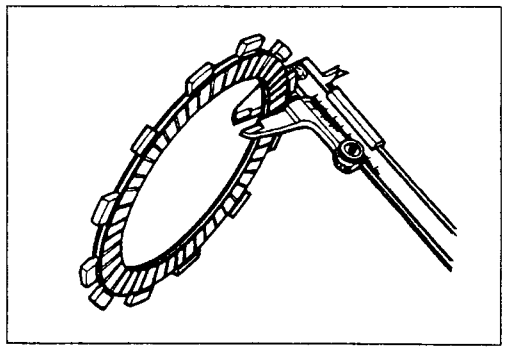

- Measure the claw width of drive plates with a vernier calipers.
- Replace the drive plates found to have worn down to the limit.

DATA Drive plate claw width:
Service Limit: (No.1 and 2) 13.05 mm (0.5138 in)

TOOL 09900-20102: Vernier calipers

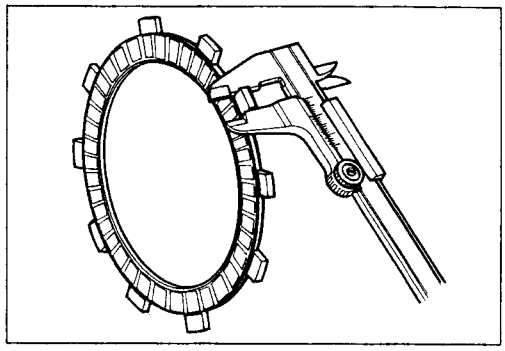

CLUTCH DRIVEN PLATES INSPECTION

NOTE:
Wipe off engine oil from the clutch driven plates with a clean rag.

- Measure each driven plate for distortion with a thickness gauge and surface plate.
- Replace driven plates which exceed the limit.

DATA Driven plate distortion (No.1, 2 and 3):
Service Limit: 0.10 mm (0.004 in)

TOOL 09900-20803: Thickness gauge

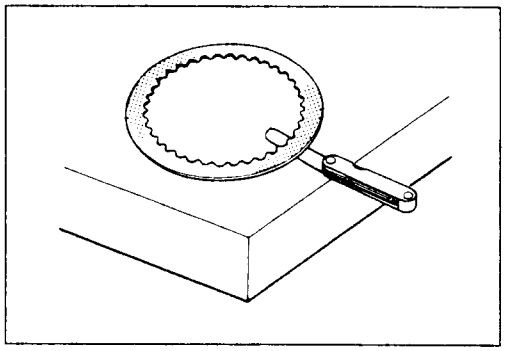

CLUTCH SPRING INSPECTION

- Measure the free length of each coil spring with a vernier calipers, and compare the length with the specified limit.
- Replace all the springs if any spring is not within the limit.

DATA Clutch spring free length:
Service Limit: 73.9 mm (2.909 in)

TOOL 09900-20102: Vernier calipers

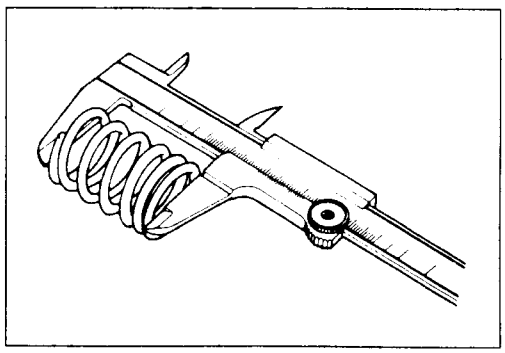

CLUTCH BEARING INSPECTION

- Inspect the clutch release bearing for any abnormality, particularly cracks, to decide whether it can be reused or should be replaced.
- Smooth engagement and disengagement of the clutch depends on the condition of this bearing.

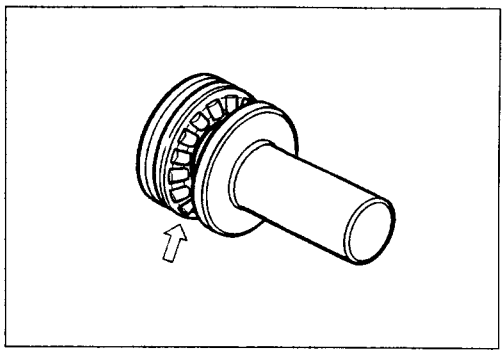

OIL PUMP

INSPECTION

- Rotate the oil pump by hand and check that it moves smoothly.
- If it does not move smoothly, replace the oil pump assembly.

⚠ CAUTION

*** Do not attempt to disassemble the oil pump assembly.**
*** The oil pump is available only as an assembly.**

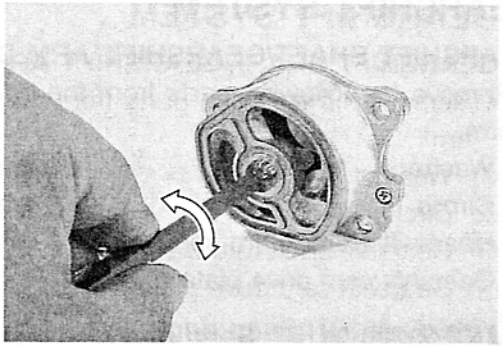

STARTER CLUTCH

INSPECTION

- Install the starter driven gear onto the starter clutch.
- Turn the starter driven gear by hand.
- Inspect the starter clutch for a smooth movement.
- Inspect that the gear turns one direction only.

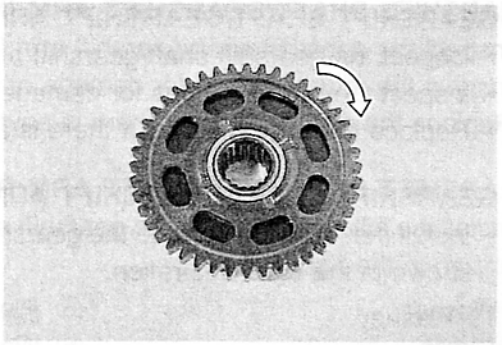

- If a large resistance is felt for rotation, inspect the starter clutch bearing or the starter clutch contacting surface on the starter driven gear for wear and damage.
- If they are found to be damaged, replace them with new ones.

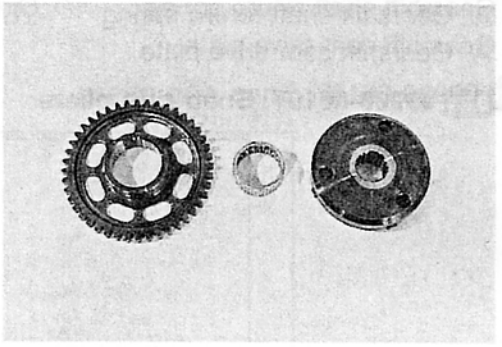

GENERATOR

INSPECTION: ☞7-8

REASSEMBLY

- When installing the generator stator set bolts, tighten them to the specified torque.

Generator stator set bolt: 10 N·m (1.0 kgf·m, 7.0 lb-ft)

NOTE:
Be sure to install the grommet to the generator cover.

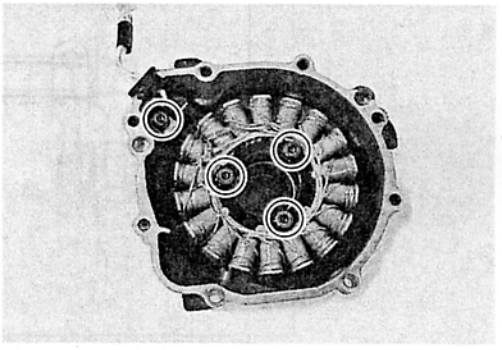

WATER PUMP

(☞ 5-11)

GEARSHIFT SYSTEM

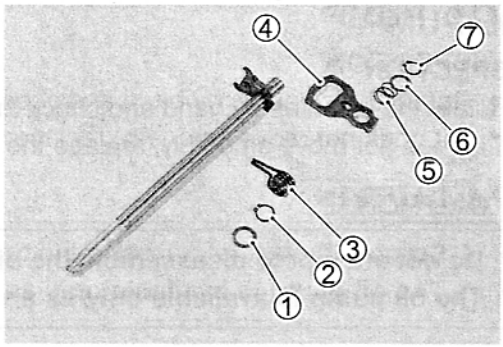

GEARSHIFT SHAFT/GEARSHIFT ARM DISASSEMBLY

- Remove the following parts from the gearshift shaft/gearshift arm.

① Washer
② Circlip
③ Gearshift shaft return spring
④ Gearshift cam drive plate
⑤ Plate return spring
⑥ Washer
⑦ Circlip

TOOL 09900-06107: Snap ring pliers

GEARSHIFT SHAFT/GEARSHIFT ARM INSPECTION

- Inspect the gearshift shaft/gearshift arm for wear or bend.
- Inspect the return springs for damage or fatigue.
- Replace the arm or spring if there is anything unusual.

GEARSHIFT SHAFT/GEARSHIFT ARM REASSEMBLY

- Install the following parts to the gearshift shaft/gearshift arm as shown in the right illustration.

① Washer
② Circlip
③ Gearshift shaft return spring
④ Gearshift cam drive plate
⑤ Plate return spring
⑥ Washer
⑦ Circlip

TOOL 09900-06107: Snap ring pliers

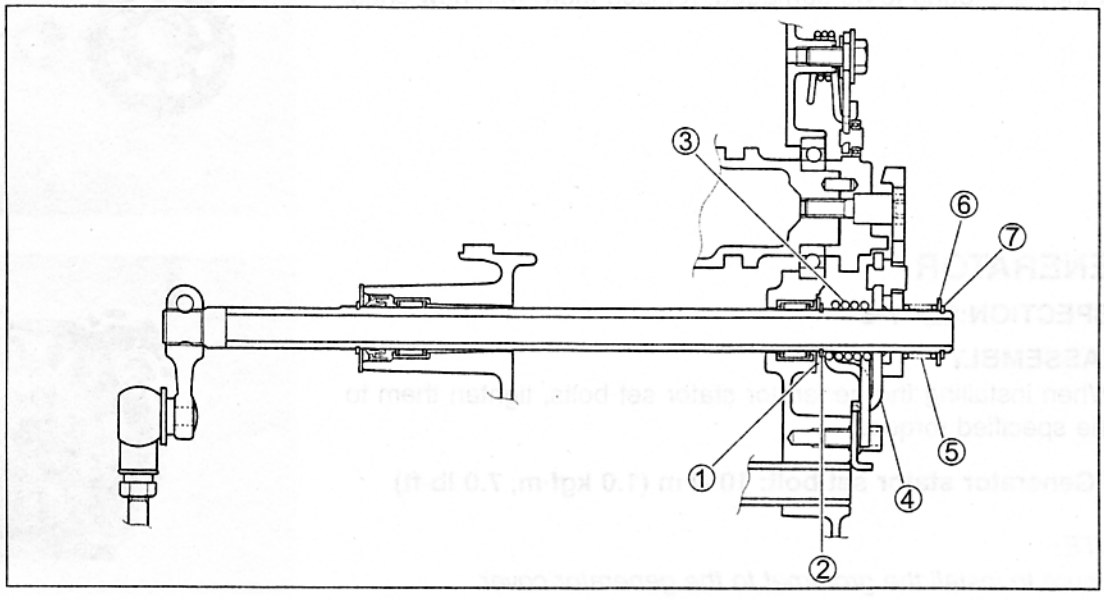

NOTE:
When installing the gearshift shaft return spring, position the stopper Ⓑ of the gearshift arm between the shaft return spring ends Ⓐ.

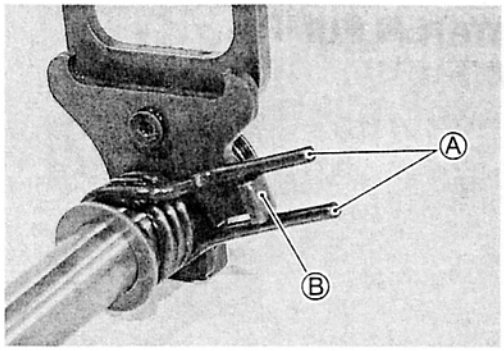

OIL PRESSURE REGULATOR

- Inspect the operation of the oil pressure regulator by pushing on the piston with a proper bar.
- If the piston does not operate, replace the oil pressure regulator with a new one.

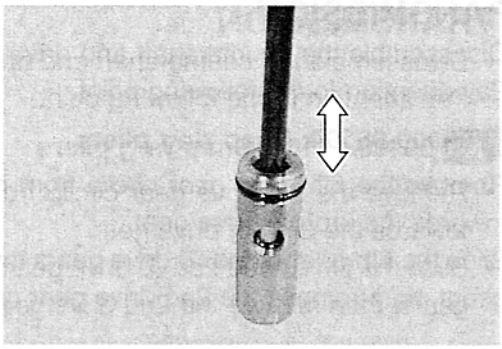

OIL STRAINER

- Inspect the oil strainer body for damage.
- Clean the oil strainer if necessary.

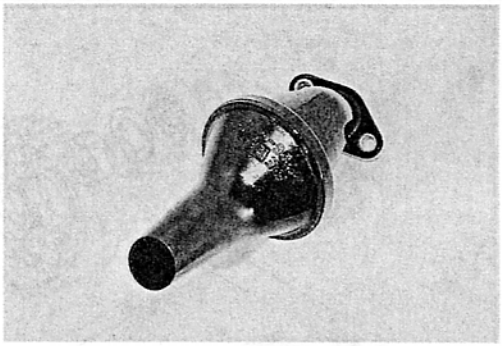

TRANSMISSION

- Disassemble the countershaft and drive shaft.
  Pay attention to the following point.

09900-06104: Snap ring pliers

- Remove the 6th drive gear circlip from its groove and slide it towards the 3rd/4th drive gear.
- Slide the 6th ① and 2nd ② drive gears toward the 3rd/4th drive gears, then remove the 2nd drive gear circlip ③.

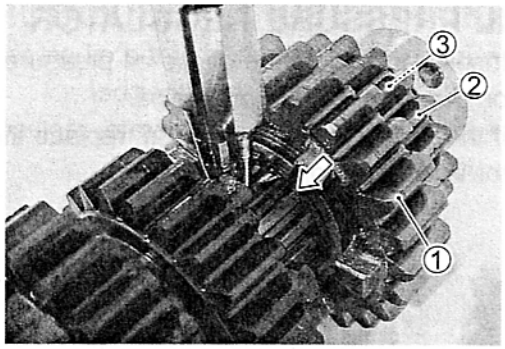

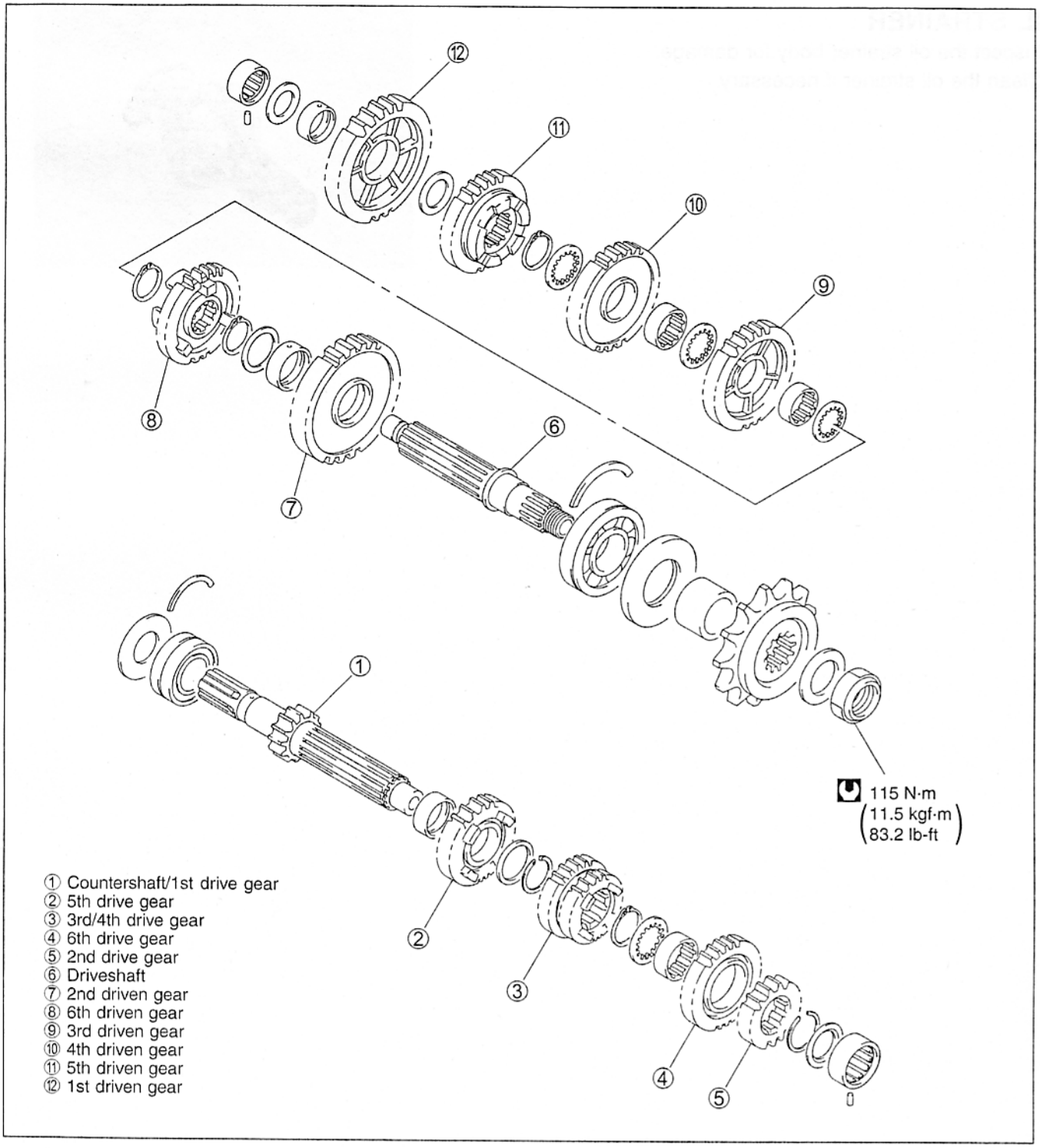

① Countershaft/1st drive gear
② 5th drive gear
③ 3rd/4th drive gear
④ 6th drive gear
⑤ 2nd drive gear
⑥ Driveshaft
⑦ 2nd driven gear
⑧ 6th driven gear
⑨ 3rd driven gear
⑩ 4th driven gear
⑪ 5th driven gear
⑫ 1st driven gear

REASSEMBLY

Assemble the countershaft and driveshaft in the reverse order of disassembly. Pay attention to the following points:

NOTE:

* *Rotate the bearings by hand to inspect for smooth rotation. Replace the bearings if there is anything unusual.*
* *Before installing the gears, apply engine oil to the driveshaft and countershaft.*
* *Before installing the oil seal, apply grease to oil seal.*

99000-25030: SUZUKI SUPER GREASE "A" (For USA)
99000-25010: SUZUKI SUPER GREASE "A" (For the others)

⚠ CAUTION

*** Never reuse a circlip. After a circlip has been removed from a shaft, it should be discarded and a new circlip must be installed.**
*** When installing a new circlip, do not expand the end gap larger than required to slip the circlip over the shaft.**
*** After installing a circlip, make sure that it is completely seated in its groove and securely fitted.**

NOTE:

When reassembling the transmission, attention must be given to the locations and positions of washers and circlips. The cross sectional view shows the correct position of the gears, bushings, washers and circlips. (☞3-48)

- When installing a new circlip, pay attention to the direction of the circlip. Fit it to the side where the thrust is as shown in the illustration.

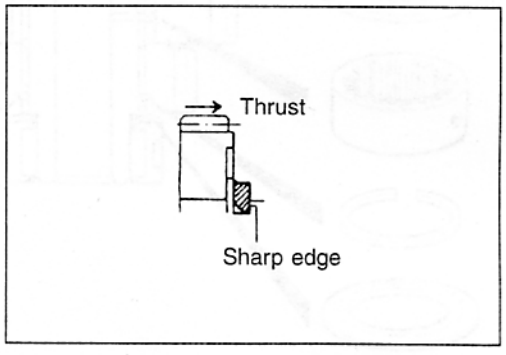

⚠ CAUTION

When installing the gear bushung onto the shaft, align the shaft oil hole ① with the bushing oil hole ②.

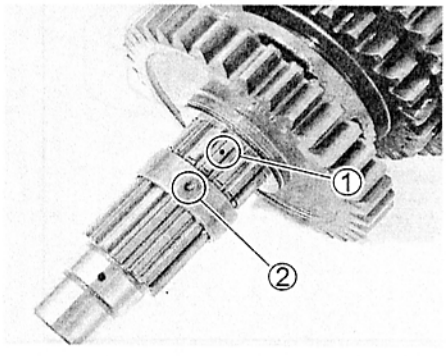

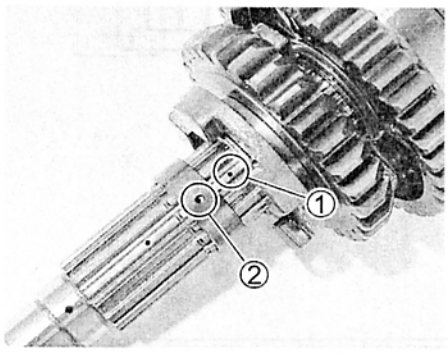

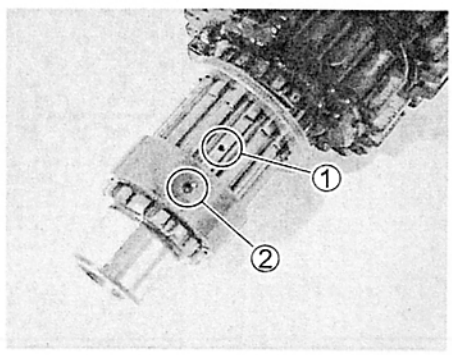

TRANSMISSION PARTS LOCATION

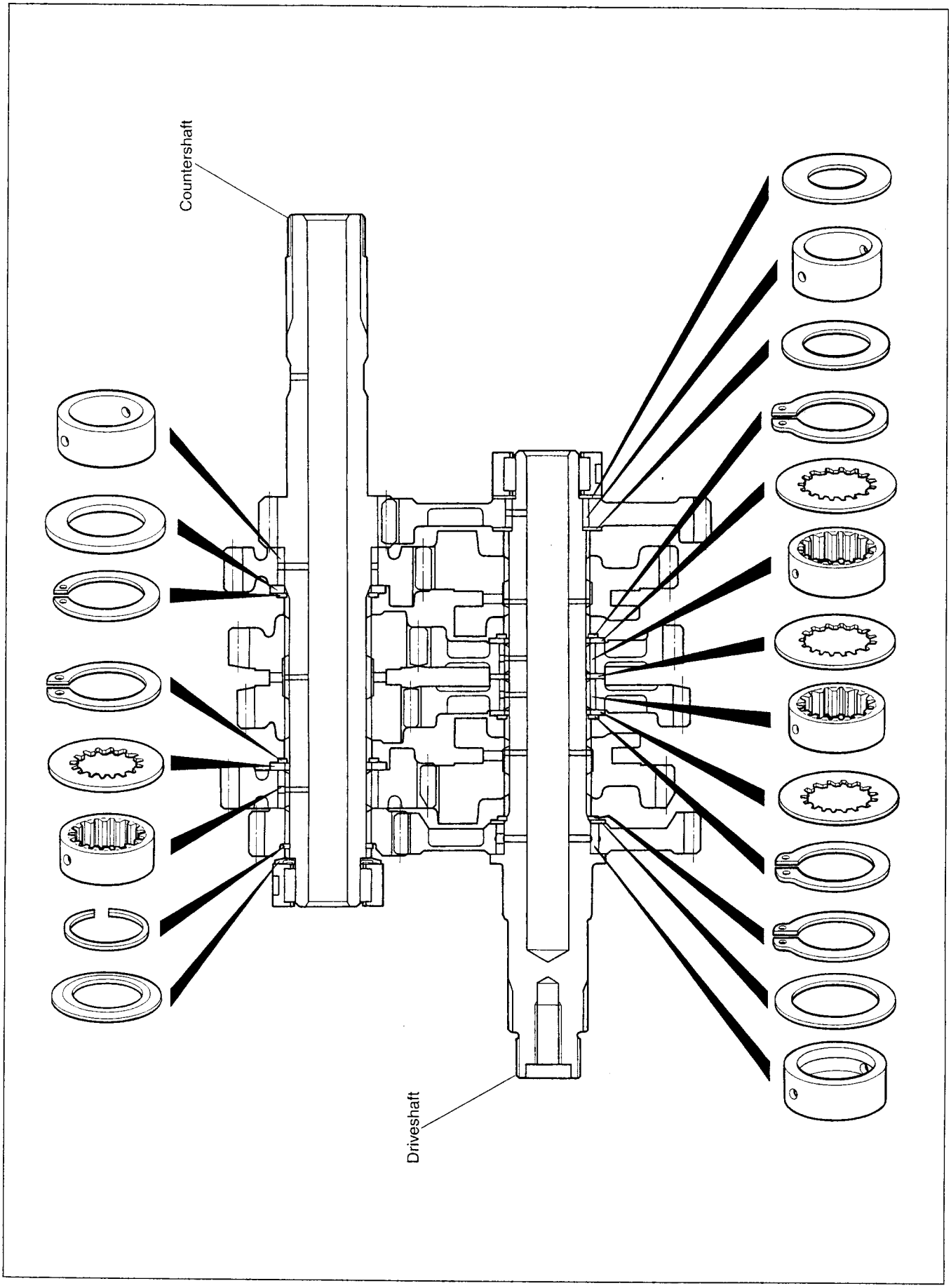

CYLINDER

CRANKCASE SERVICING: ☞3-53

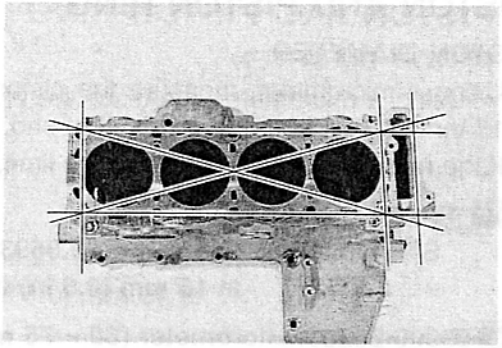

CYLINDER DISTORTION

- Check the gasketed surface of the cylinder for distortion with a straightedge and thickness gauge, taking a clearance reading at several places as indicated.
- If the largest reading at any position of the straightedge exceeds the limit, replace the cylinder.

TOOL 09900-20803: Thickness gauge

DATA Cylinder distortion:
Service Limit: 0.20 mm (0.008 in)

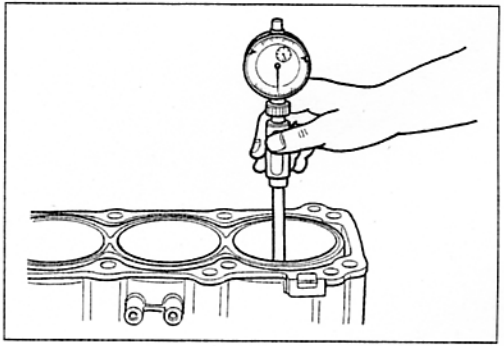

CYLINDER BORE

- Inspect the cylinder wall for any scratches, nicks or other damage.
- Measure the cylinder bore diameter at six places.

DATA Cylinder bore:
Standard: 73.000 – 73.015 mm (2.8740 – 2.8746 in)

TOOL 09900-20508: Cylinder gauge set

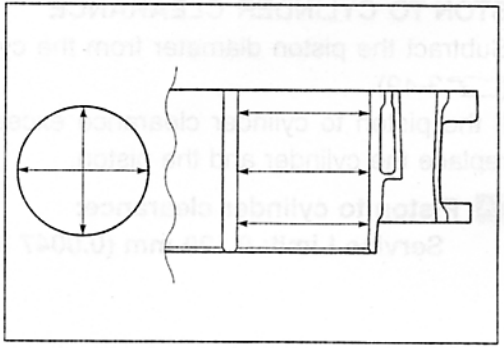

PISTON AND PISTON RING

PISTON DIAMETER

- Using a micrometer, measure the piston outside diameter at 15 mm (0.6 in) from the piston skirt end.
- If the measurement is less than the limit, replace the piston.

DATA Piston diameter:
Service Limit: 72.880 mm (2.8693 in)
at 15 mm (0.6 in) from the skirt end

TOOL 09900-20203: Micrometer (50 – 75 mm)

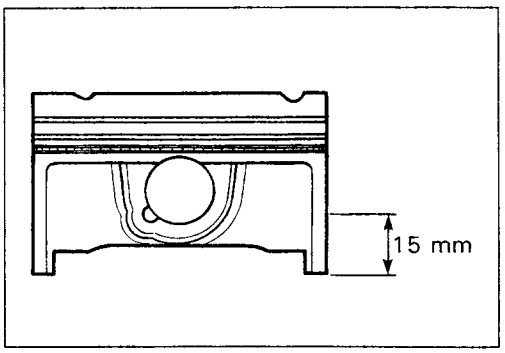

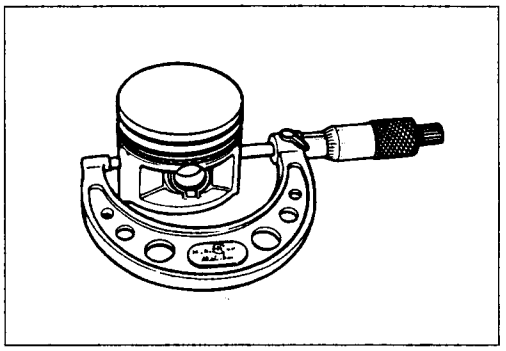

PISTON TO CYLINDER CLEARANCE

- Subtract the piston diameter from the cylinder bore diameter. (☞3-49)
- If the piston to cylinder clearance exceeds the service limit, replace the cylinder and the piston.

DATA Piston to cylinder clearance:
Service Limit: 0.120 mm (0.0047 in)

PISTON PINS AND PIN BORE

- Measure the piston pin bore inside diameter using the small bore gauge.
- If the measurement is out of specifications replace the piston.

TOOL 09900-20602: Dial gauge (1/1000 mm)
09900-22401: Small bore gauge (10 – 18 mm)

DATA Piston pin bore I.D.:
Service Limit: 16.030 mm (0.6311 in)

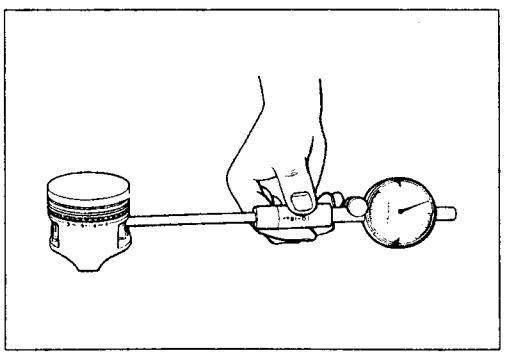

- Measure the piston pin outside diameter at three positions using the micrometer.
- If any of the measurements are out of specification, replace the piston pin.

TOOL 09900-20205: Micrometer (0 – 25 mm)

DATA Piston pin O.D.:
Service Limit: 15.980 mm (0.6291 in)

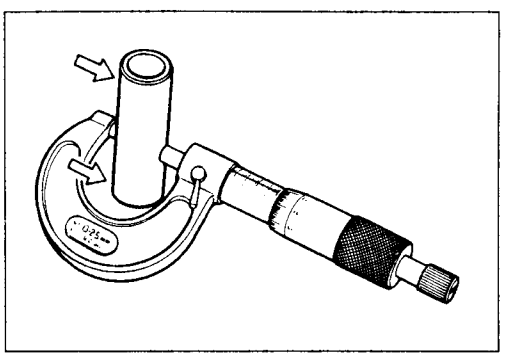

PISTON RING TO GROOVE CLEARANCE

- Measure the side clearances of the 1st and 2nd piston rings using the thickness gauge.
- If any of the clearances exceed the limit, replace both the piston and piston rings.

TOOL **09900-20803: Thickness gauge**
09900-20205: Micrometer (0 – 25 mm)

DATA **Piston ring to groove clearance:**
Service Limit (1st): 0.18 mm (0.0071 in)
(2nd): 0.15 mm (0.0059 in)

DATA **Piston ring groove width:**
Standard (1st): 1.01 – 1.03 mm (0.0398 – 0.0406 in)
(2nd): 0.81 – 0.83 mm (0.0319 – 0.0327 in)
(Oil): 1.51 – 1.53 mm (0.0594 – 0.0602 in)

DATA **Piston ring thickness:**
Standard (1st): 0.97 – 0.99 mm (0.0382 – 0.0390 in)
(2nd): 0.77 – 0.79 mm (0.0303 – 0.0311 in)

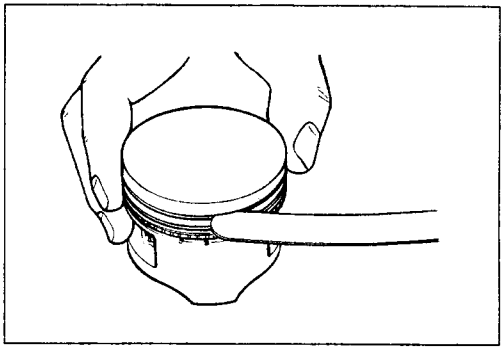

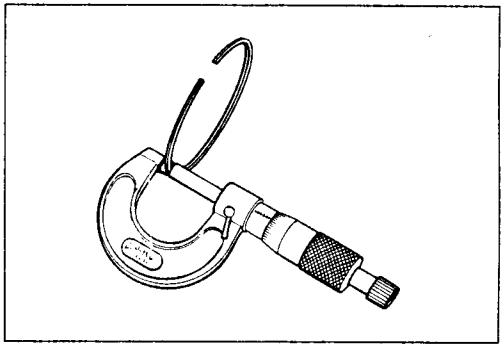

PISTON RING FREE END GAP AND PISTON RING END GAP

- Measure the piston ring free end gap using vernier calipers.
- Next, fit the piston ring squarely into the cylinder and measure the piston ring end gap using the thickness gauge.
- If any of the measurements exceed the service limit, replace the piston ring with a new one.

TOOL **09900-20102: Vernier calipers**

DATA **Piston ring free end gap:**
Service Limit (1st) : 5.8 mm (0.23 in)
(2nd): 8.2 mm (0.32 in)

TOOL **09900-20803: Thickness gauge**

DATA **Piston ring end gap:**
Service Limit (1st) : 0.50 mm (0.020 in)
(2nd): 0.50 mm (0.020 in)

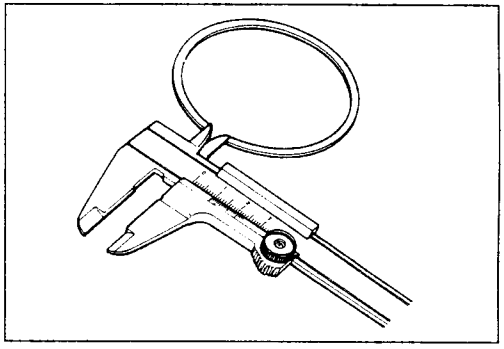

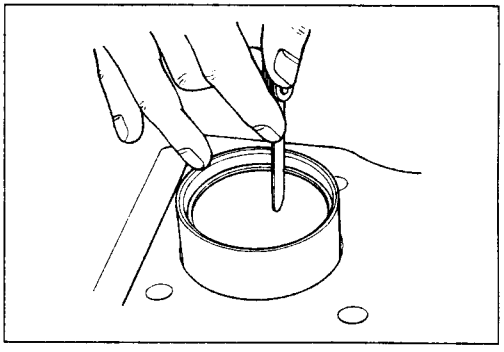

PISTON RING REASSEMBLY

- Install the piston rings in the order of oil ring, 2nd ring and 1st ring.
- The first member to go into the oil ring groove is a spacer ①. After placing the spacer, fit the two side rails ②.

NOTE:
Side designations, top and bottom, are not applied to the spacer and side rails: you can position each either way.

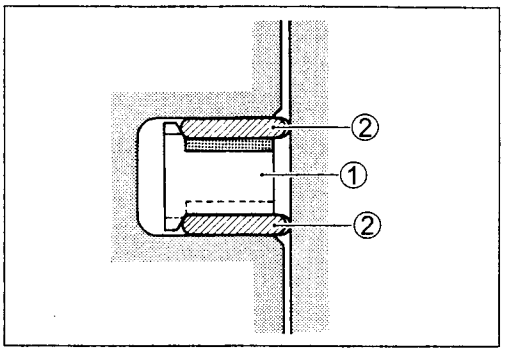

⚠ CAUTION

When installing the spacer, be careful not to allow its two ends to overlap in the groove.

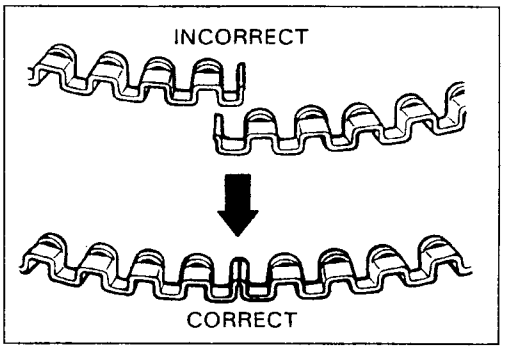

- Install the 2nd ring ③ and the 1st ring ④.

NOTE:
1st ring and 2nd ring differ in shape.

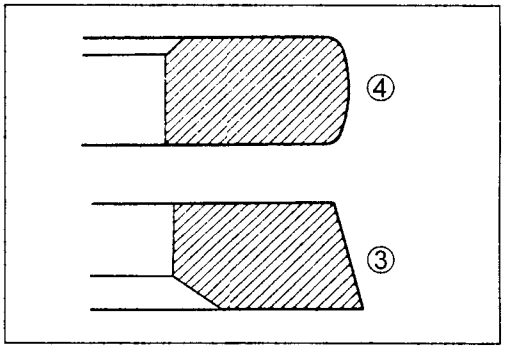

- 1st ring and 2nd ring have letters "R" and "RN" marked on the side. Be sure to bring the marked side to the top when fitting them to the piston.

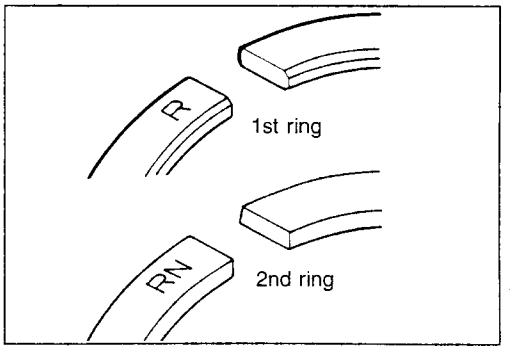

- Position the gaps of the three rings as shown. Before inserting each piston into the cylinder, check that the gaps are so located.

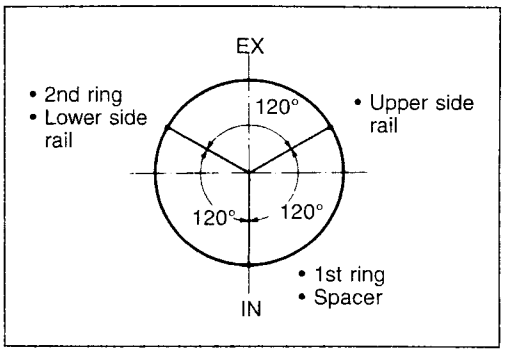

CRANKCASE

LOWER CRANKCASE

GEARSHIFT FORK AND GEARSHIFT CAM

Removal

- Remove the gearshift cam bearing retainer ① and gearshift fork retainer ② from the lower crankcase.

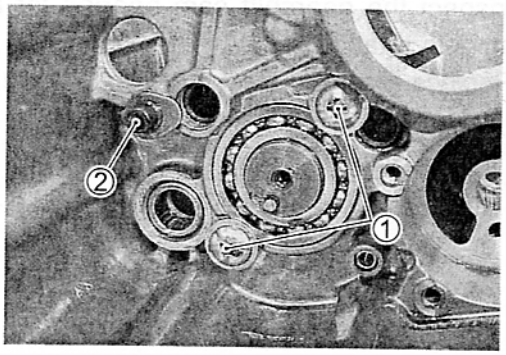

- Remove the gearshift fork shafts and gearshift forks from the lower crankcase.
- Remove the gear shift cam and its bearing.

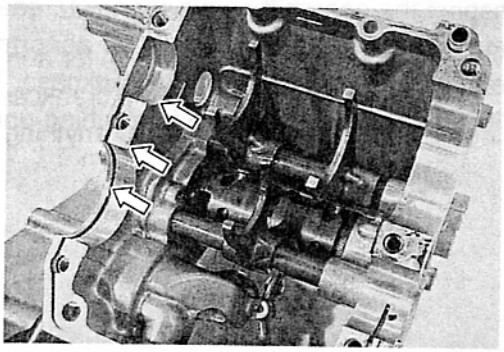

GEARSHIFT FORK TO GROOVE CLEARANCE

- Using a thickness gauge, check the gearshift fork clearance in the groove of its gear.
- The clearance for each gearshift fork plays an important role in the smoothness and positiveness of the shifting action.

DATA Shift fork to groove clearance:
Service Limit: 0.50 mm (0.020 in)

TOOL 09900-20803: Thickness gauge

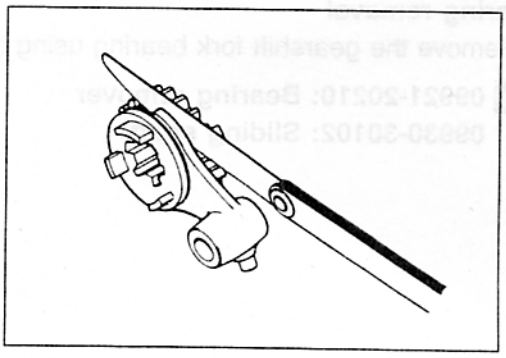

- If the clearance checked is noted to exceed the limit specified, replace the fork or its gear, or both.

GEARSHIFT FORK GROOVE WIDTH

- Measure the gearshift fork groove width using the vernier calipers.

DATA Shift fork groove width:
Standard: 5.0 – 5.1 mm (0.197 – 0.201 in)

TOOL 09900-20102: Vernier calipers

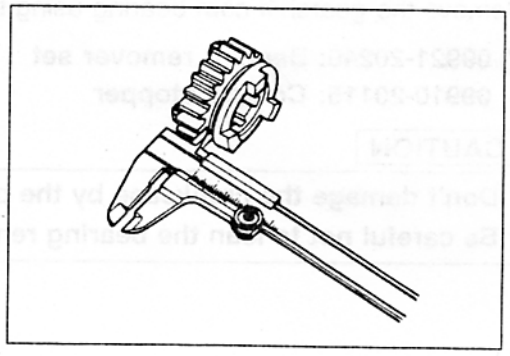

GEARSHIFT FORK THICKNESS

- Measure the gearshift fork thickness using the vernier calipers.

DATA Shift fork thickness:
Standard: 4.8 – 4.9 mm (0.189 – 0.193 in)

TOOL 09900-20102: Vernier calipers

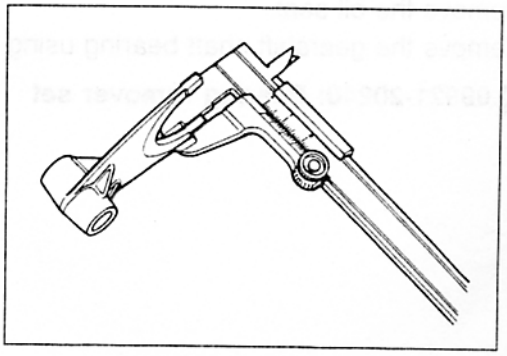

- Inspect the gearshift cam bearing for abnormal noise and smooth rotation.
- Replace the bearings if there is anything unusual.

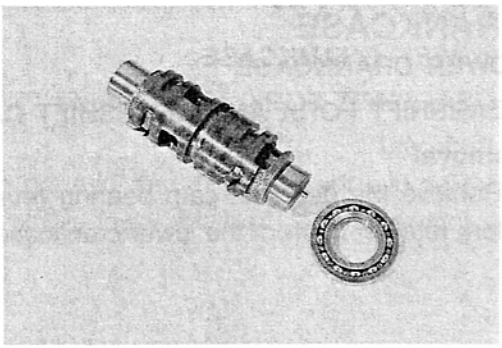

- Inspect the gearshift cam bearing ①, gearshift fork bearing ② and gearshift shaft bearing ③ for abnormal noise and smooth rotation while they are in the crankcase.
- Replace a bearing if there is anything unusual.

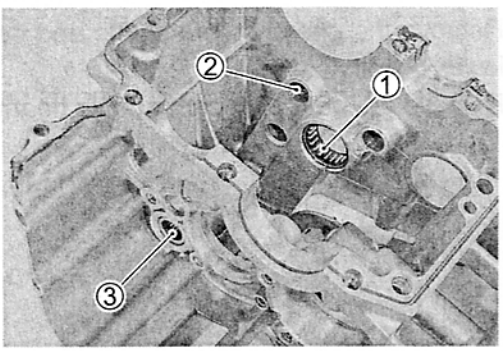

Bearing removal

- Remove the gearshift fork bearing using the special tool.

TOOL 09921-20210: Bearing remover
09930-30102: Sliding shaft

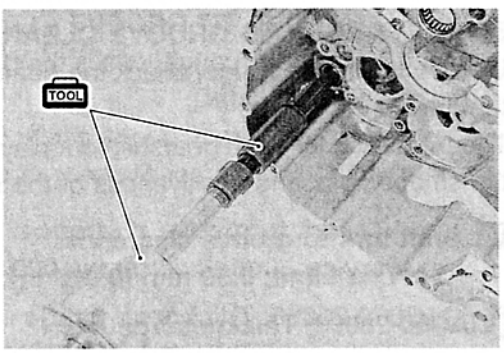

- Remove the gearshift cam bearing using the special tools.

TOOL 09921-20240: Bearing remover set
09910-20115: Conrod stopper

⚠ CAUTION

*** Don't damage the crankcase by the conrod stopper.**
*** Be careful not to lean the bearing remover.**

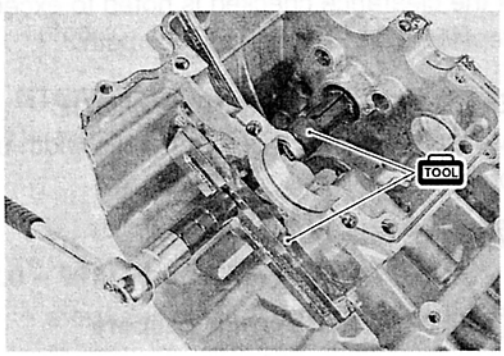

- Remove the oil seal.
- Remove the gearshift shaft bearing using the special tool.

TOOL 09921-20240: Bearing remover set

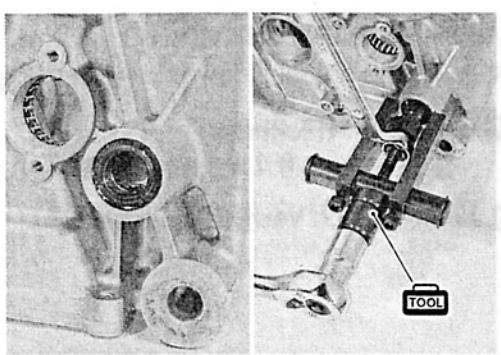

Installation

- Install the bearings using the special tool.

TOOL 09913-70210: Bearing installer set

NOTE:
The stamped mark side of the gearshift shaft bearing faces outside.

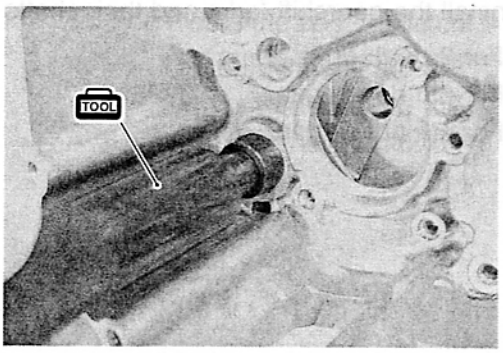

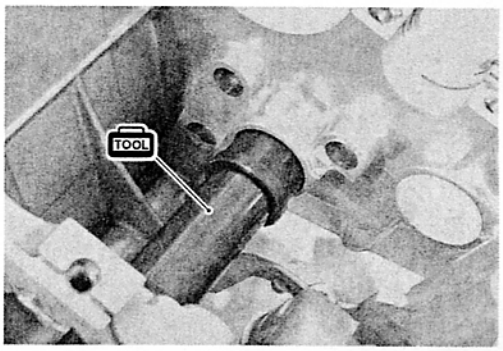

- Install the oil seal.

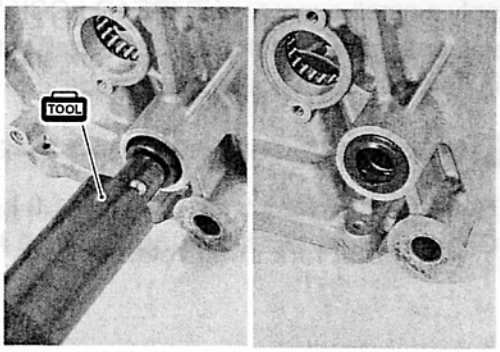

- Install the gearshift cam with the bearing.

NOTE:
The stamped mark side of the gearshift cam bearing faces outside.

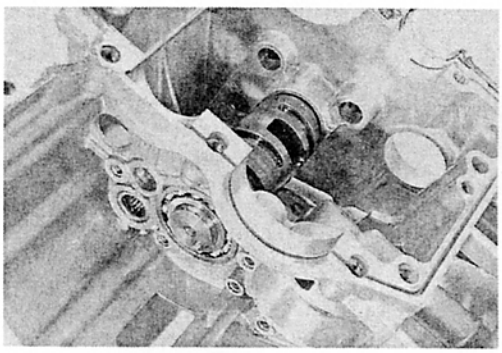

- Install the gearshift forks and their shafts as shown.

① For 3rd/4th drive gears
② For 6th driven gear
③ For 5th driven gear

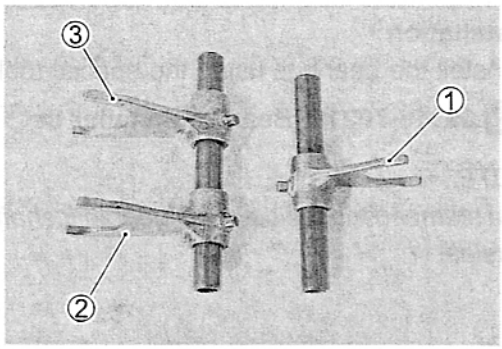

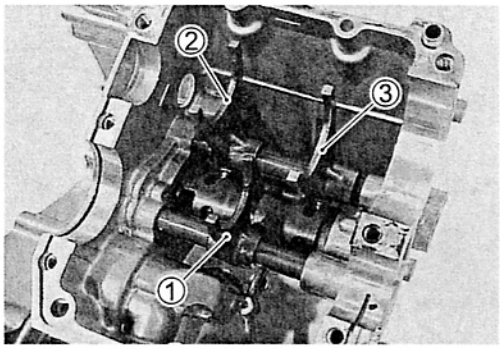

- Apply a small quantity of THREAD LOCK "1342" to the bearing retainer screws and the shift fork shaft retainer bolt.
- Tighten them to the specified torque.

1342 99000-32050: THREAD LOCK "1342"

Bearing retainer screw: 10 N·m (1.0 kgf·m, 7.0 lb-ft)
Gearshift fork shaft retainer bolt: 19 N·m (1.9 kgf·m, 13.7 lb-ft)

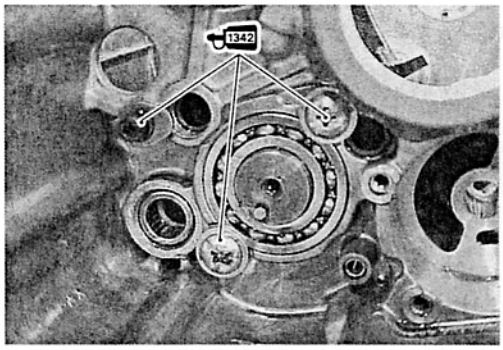

OIL JET

Removal

- Remove the piston cooling oil jets ① from the upper crankcase.

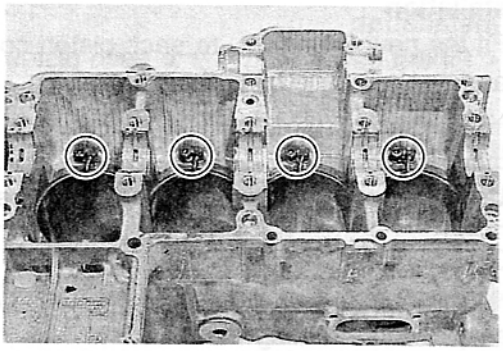

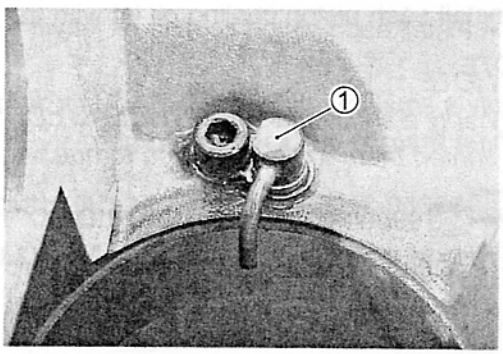

- Remove the oil jet (for transmission) from the lower crankcase.

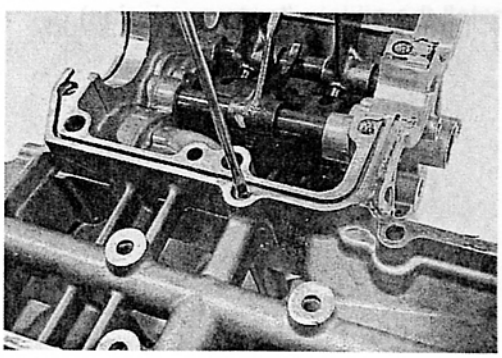

Inspection and cleaning

- Check the oil jets for clogging.
- If they are clogged, clean their oil passage with a proper wire and compressed air.

① Piston cooling oil jet
② Oil jet (#14) (For transmission)

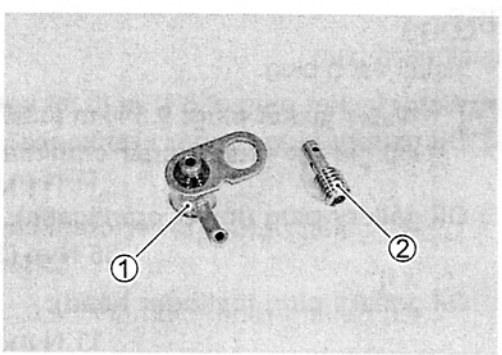

Installation

- Fit the new O-rings ① to each piston cooling oil jet as shown and apply engine oil to them.

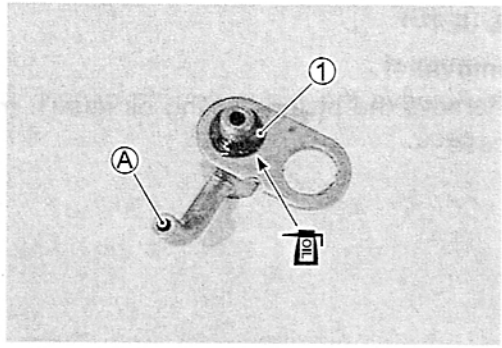

⚠ CAUTION

Use the new O-rings to prevent oil pressure down.

NOTE:
Be sure to face the oil holes Ⓐ on each piston cooling oil jet to the top when installing them.

- Install each piston cooling oil jet with the bolts.

NOTE:
Apply a small quantity of THREAD LOCK "1342" to the bolts and tighten them to the specified torque.

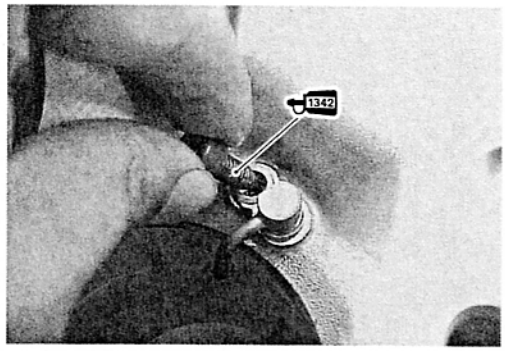

1342 99000-32050: THREAD LOCK "1342"

Piston cooling oil jet bolt: 10 N·m (1.0 kgf·m, 7.0 lb-ft)

- Install the oil jets (for transmission).

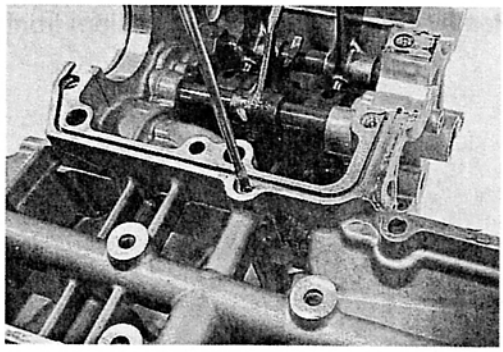

PLUGS

- Install each plug.

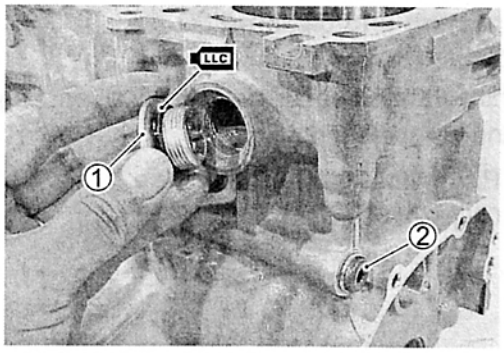

①Water jacket plug: 9.5 N·m (0.95 kgf·m, 6.9 lb-ft)
②Oil gallery plug (upper crankcase): 11 N·m (1.1 kgf·m, 8.0 lb-ft)
③Oil gallery plug (lower crankcase): 35 N·m (3.5 kgf·m, 25.3 lb-ft)
④Oil gallery plug (cylinder head): 11 N·m (1.1 kgf·m, 8.0 lb-ft)

NOTE:
Apply the engine coolant to the O-ring.

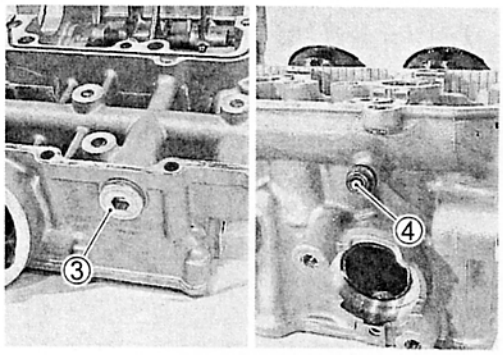

BALANCER SHAFT

DISASSEMBLY

- Draw out the balancer gear and damper from the balancer shaft.

INSPECTION

- Inspect the damper for wear and damage, replace it if any defective are found.

REASSEMBLY

- Apply molybdenum oil solution to each parts.

MOLYBDENUM OIL

- Set the dampers and install the balancer shaft to balancer gear.

NOTE:

* *Align the stopper of the balancer shaft with between the dampers.*
* *Align the line Ⓐ on the balancer shaft with the punch Ⓑ on the balancer gear.*

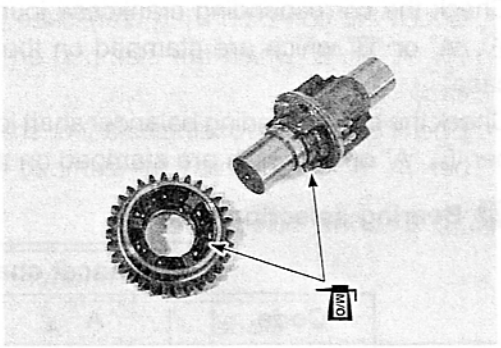

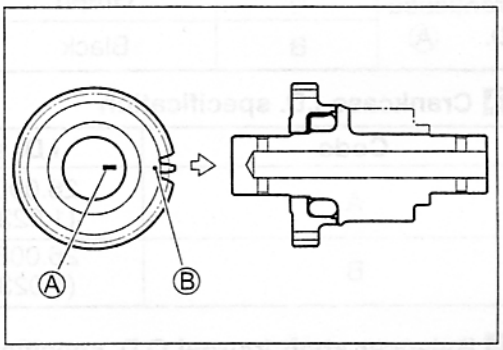

BALANCER SHAFT JOURNAL BEARING

INSPECTION

- Inspect each bearing of upper and lower crankcases for any damage.

SELECTION

- Place the plastigauge axially along the balancer shaft journal as shown.

TOOL 09900-22301: Plastigauge

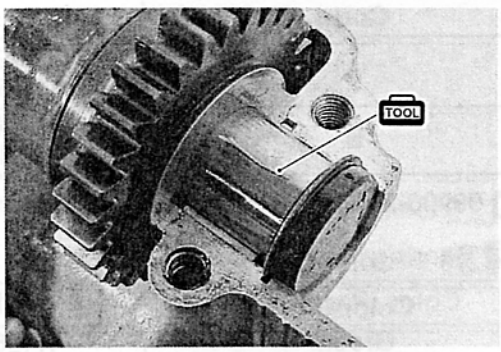

⚠ CAUTION

Never rotate the balancer shaft when a piece of plastigauge is installed.

- Mate the middle crankcase with the upper crankcase, and tighten the crankcase bolts (M9 and M8) with the specified torque.

Crankcase bolt (9 mm):
Initial : 18 N·m (1.8 kgf·m, 13.0 lb-ft)
Final : 50°

Crankcase bolt (M8):
Initial : 15 N·m (1.5 kgf·m, 10.8 lb-ft)
Final : 26 N·m (2.6 kgf·m, 19.0 lb-ft)

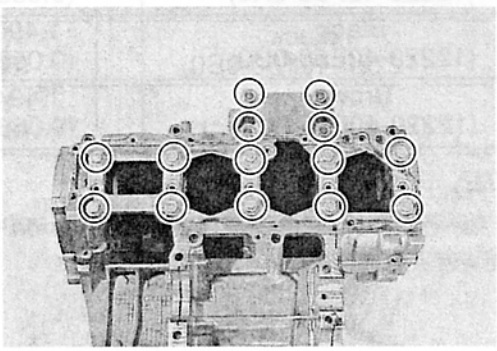

- Remove the lower crankcase and measure the width of the compressed plastigauge using the envelope scale. This measurement should be taken at the widest part of the compressed plastigauge.

DATA Balancer shaft journal oil clearance:
Standard: 0.020 – 0.044 mm (0.00079 – 0.00173 in)
Service Limit: 0.080 mm (0.031 in)

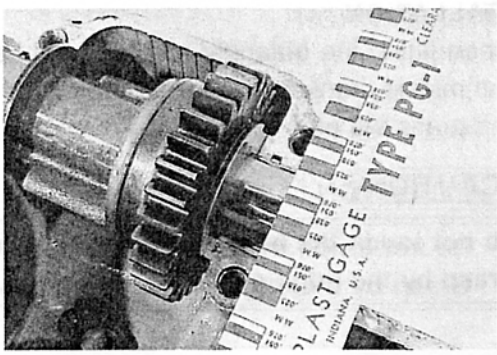

- If the oil clearance exceeds the service limit, select the specified bearings from the bearing selection table.

- Check the corresponding crankcase journal I.D. code number Ⓐ, "A" or "B" which are stamped on the rear of upper crankcase.
- Check the corresponding balancer shaft journal O.D. code number Ⓑ, "A" or "B" which are stamped on the balancer shaft.

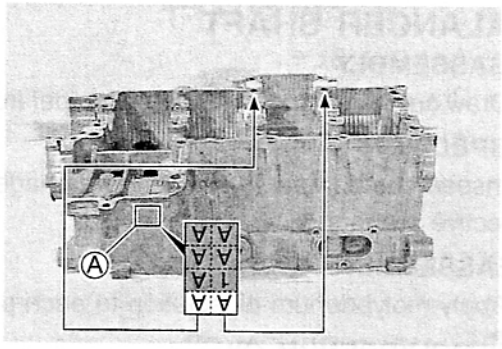

DATA Bearing selection table

		Balancer shaft journal O.D. Ⓑ	
	Code	A	B
Crankcase I.D. Ⓐ	A	Green	Black
	B	Black	Brown

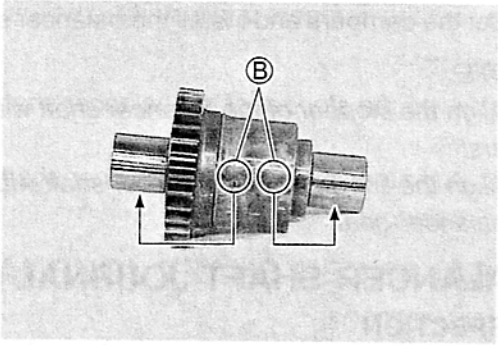

DATA Crankcase I.D. specification

Code	I.D. specification
A	26.000 – 26.008 mm (1.0236 – 1.0239 in)
B	26.008 – 26.016 mm (1.0239 – 1.0243 in)

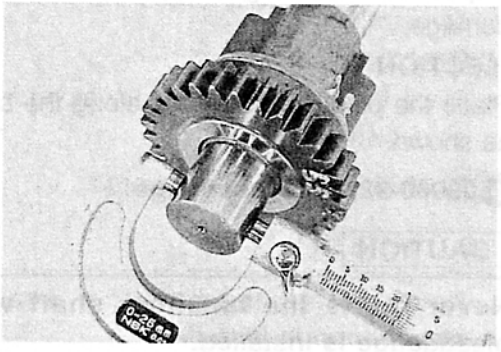

DATA Balancer shaft journal O.D. specification

Code	O.D. specification
A	22.992 – 23.000 mm (0.9052 – 0.9055 in)
B	22.984 – 22.992 mm (0.9049 – 0.9052 in)

TOOL 09900-20205: Micrometer (0 – 25 mm)

DATA Bearing thickness specification

Color (Part No.)	Thickness
Green (12229-40F50-0A0)	1.486 – 1.490 mm (0.0585 – 0.0587 in)
Black (12229-40F50-0B0)	1.490 – 1.494 mm (0.0587 – 0.0588 in)
Brown (12229-40F50-0C0)	1.494 – 1.498 mm (0.0588 – 0.0590 in)

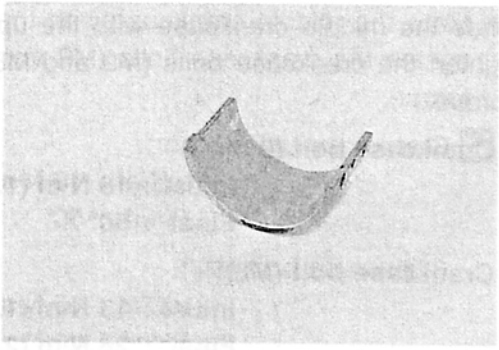

NOTE:
The balancer shaft journal bearings on upper and middle crankcase are the same.

INSTALLATION

- When fitting the balancer shaft journal bearings to the upper and middle crankcases, be sure to fix the stopper part Ⓐ first and press the other end.

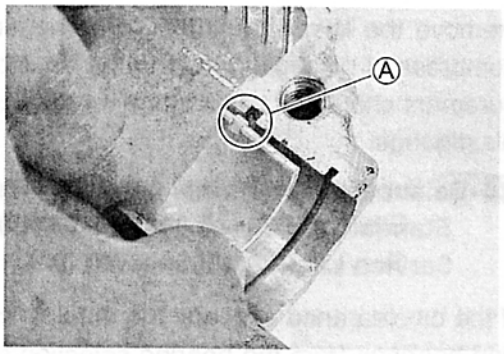

⚠ CAUTION

Do not touch the bearing surfaces with your hands. Grasp by the edge of the bearing shell.

CRANKSHAFT AND CONROD

CRANKSHAFT RUNOUT

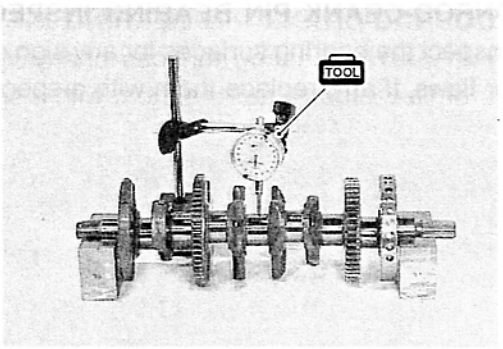

- Support the crankshaft with "V" blocks as shown, with the two end journals resting on the blocks.
- Set up the dial gauge, as shown.
- Rotate the crankshaft slowly to read the runout.
- Replace the crankshaft if the runout is greater than the limit.

TOOL 09900-20606: Dial gauge (1/100 mm, 10 mm)
09900-20701: Magnetic stand
09900-21304: V-block (100 mm)

DATA Crankshaft runout:
Service Limit: 0.05 mm (0.002 in)

CONROD SMALL END I.D.

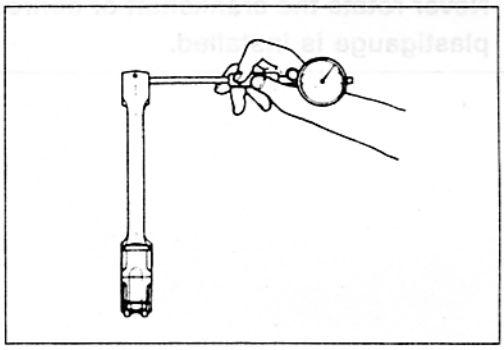

- Using a small bore gauge, measure the inside diameter of the conrod small end.

TOOL 09900-20602: Dial gauge (1/1000 mm, 1 mm)
09900-22401: Small bore gauge (10 – 18 mm)

DATA Conrod small end I.D.:
Service Limit: 16.040 mm (0.6315 in)

- If the inside diameter of the conrod small end exceeds the limit, replace the conrod.

CONROD BIG END SIDE CLEARANCE

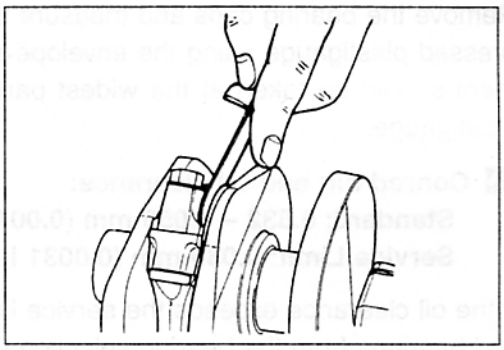

- Inspect the conrod side clearance by using a thickness gauge.
- If the clearance exceeds the limit, remove the conrod and inspect the conrod big end width and the crank pin width.
- If the width exceed the limit, replace conrod or crankshaft.

DATA Conrod big end side clearance:
Service Limit: 0.30 mm (0.012 in)

TOOL 09900-20803: Thickness gauge

DATA Conrod big end width:
Standard: 19.95 – 20.00 mm (0.7854 – 0.7874 in)

TOOL 09900-20205: Micrometer (0 – 25 mm)

DATA Crank pin width:
Standard: 20.10 – 20.15 mm (0.7913 – 0.7933 in)

TOOL 09900-20605: Dial calipers (1/100 mm, 10 – 34 mm)

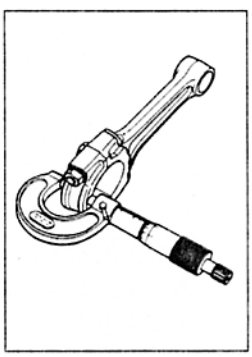

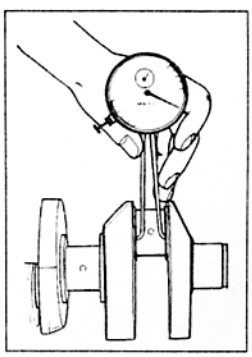

CONROD-CRANK PIN BEARING INSPECTION

- Inspect the bearing surfaces for any sign of fusion, pitting, burn, or flaws. If any, replace them with a specified set of bearings.

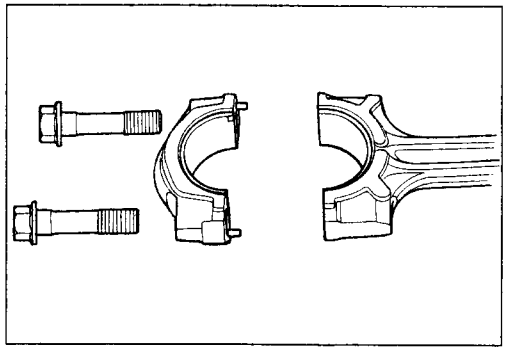

CONROD-CRANK PIN BEARING SELECTION

- Place the plastigauge axially along the crank pin, avoiding the oil hole, as shown.

TOOL **09900-22301: Plastigauge**

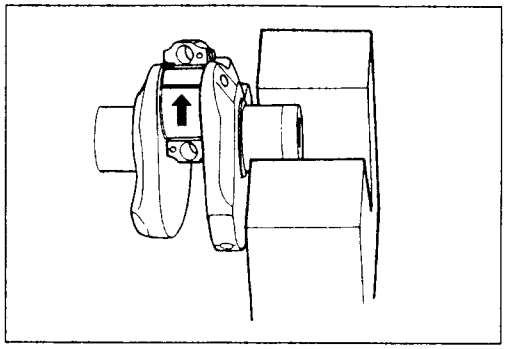

- Tighten the conrod cap bolts to the specified torque, in two stages. (☞ 3-70)

⚠ CAUTION

*** Apply engine oil to the bearing cap bolt.**
*** Never rotate the crankshaft or conrod when a piece of plastigauge is installed.**

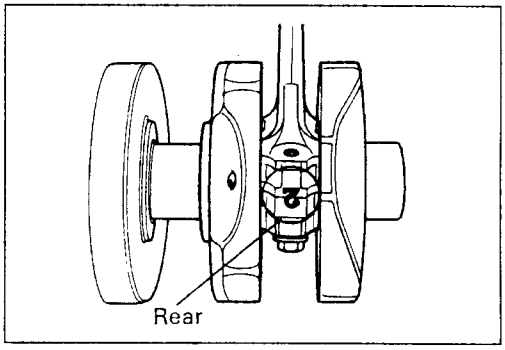

- Remove the bearing caps and measure the width of the compressed plastigauge using the envelope scale. This measurement should be taken at the widest part of the compressed plastigauge.

DATA **Conrod big end oil clearance:**
Standard: 0.032 – 0.056 mm (0.0013 – 0.0022 in)
Service Limit: 0.080 mm (0.0031 in)

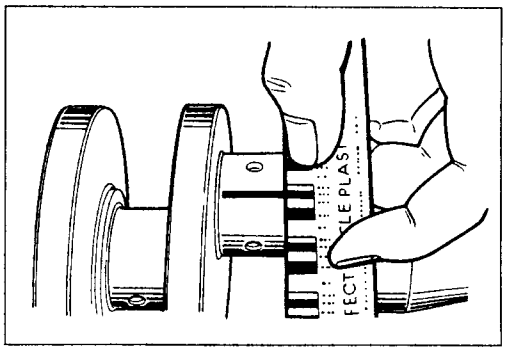

- If the oil clearance exceeds the service limit, select the specified bearings from the bearing selection table.

- Check the corresponding conrod I.D. code number ("1" or "2") Ⓐ.

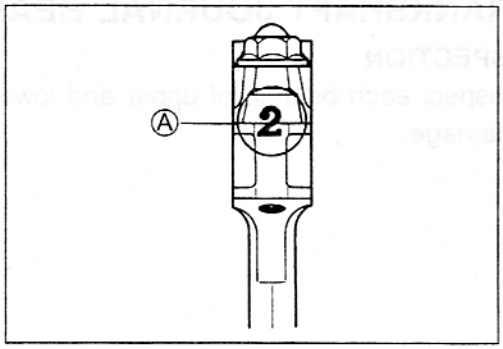

- Check the corresponding crank pin O.D. code number ("1" , "2" or "3") Ⓑ.

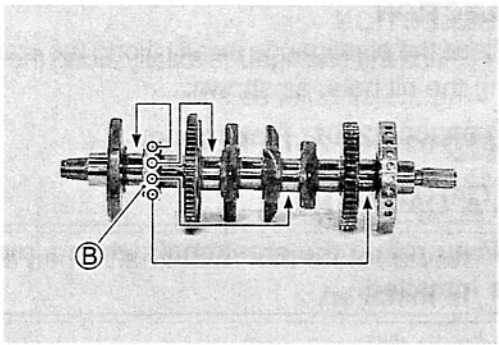

DATA Bearing selection table

		Crank pin O.D. Ⓑ		
	Code	1	2	3
Conrod I.D. Ⓐ	1	Green	Black	Brown
	2	Black	Brown	Yellow

DATA Conrod I.D.

Code	I.D. specification
1	38.000 – 38.008 mm (1.4961 – 1.4964 in)
2	38.008 – 38.016 mm (1.4964 – 1.4967 in)

DATA Crank pin O.D.

Code	O.D. specification
1	34.992 – 35.000 mm (1.3776 – 1.3780 in)
2	34.984 – 34.992 mm (1.3773 – 1.3776 in)
3	34.976 – 34.984 mm (1.3770 – 1.3773 in)

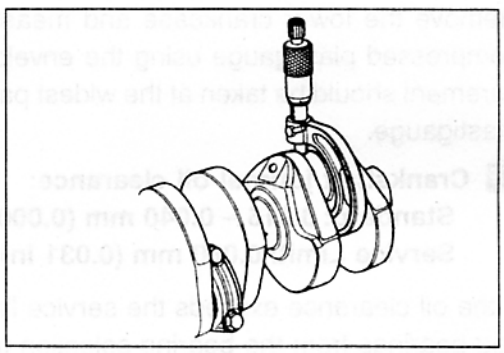

TOOL 09900-20202: Micrometer (25 – 50 mm)

DATA Bearing thickness

Color (Part No.)	Thickness
Green (12164-40F00-0A0)	1.480 – 1.484 mm (0.0583 – 0.0584 in)
Black (12164-40F00-0B0)	1.484 – 1.488 mm (0.0584 – 0.0586 in)
Brown (12164-40F00-0C0)	1.488 – 1.492 mm (0.0586 – 0.0587 in)
Yellow (12164-40F00-0D0)	1.492 – 1.496 mm (0.0587 – 0.0589 in)

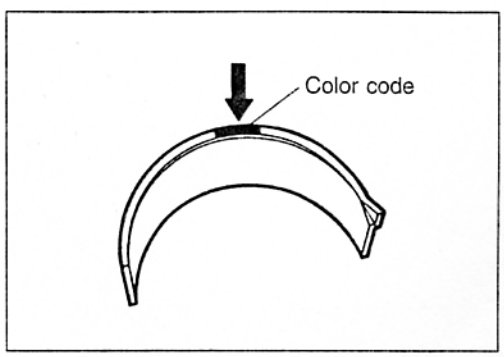

⚠ CAUTION

The bearings must be replaced as a set.

CRANKSHAFT JOURNAL BEARING

INSPECTION

- Inspect each bearing of upper and lower crankcases for any damage.

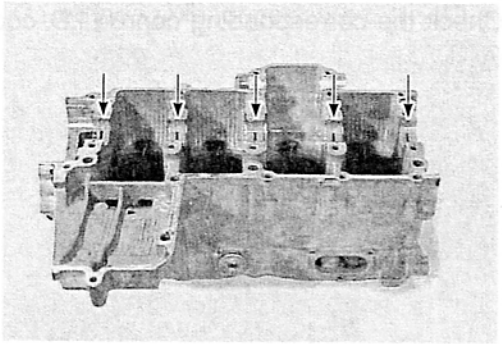

SELECTION

- Place the plastigauge axially along the crankshaft journal, avoiding the oil hole, as shown.

TOOL 09900-22301: Plastigauge

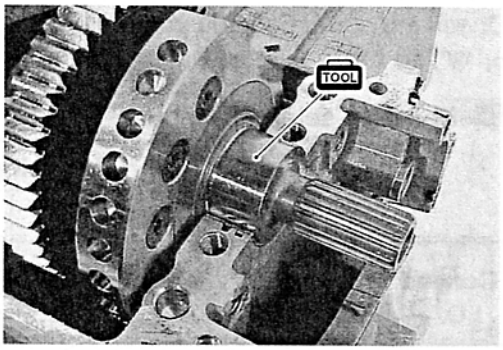

⚠ CAUTION

Never rotate the crankshaft when a piece of plastigauge is installed.

- Mate the lower crankcase with the upper crankcase, and tighten the crankcase bolts (M9) as following two steps in the indicated order.

Crankcase bolt (9 mm)
Initial : 18 N·m (1.8 kgf·m, 13.0 lb-ft)
Final : 50°

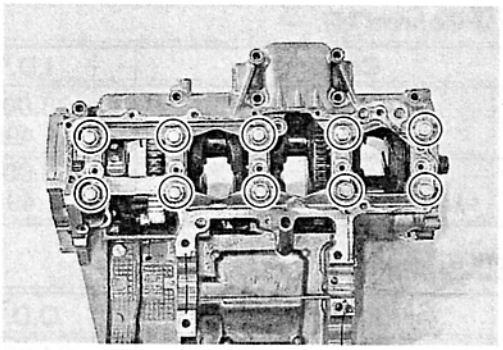

- Remove the lower crankcase and measure the width of the compressed plastigauge using the envelope scale. This measurement should be taken at the widest part of the compressed plastigauge.

DATA Crankshaft journal oil clearance:
Standard: 0.016 – 0.040 mm (0.0006 – 0.0016 in)
Service Limit: 0.080 mm (0.031 in)

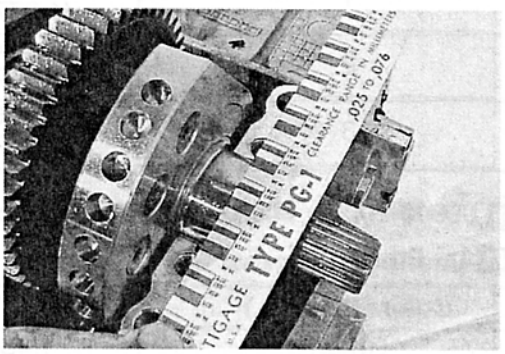

- If the oil clearance exceeds the service limit, select the specified bearings from the bearing selection table.

- Check the corresponding crankcase journal I.D. code number Ⓐ, "A" or "B" which are stamped on the rear of upper crankcase.
- Check the corresponding crankshaft journal O.D. code number Ⓑ, "A", "B" or "C" which are stamped on the crankshaft.

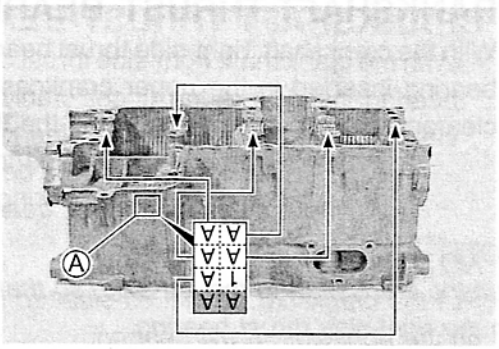

DATA Bearing selection table

		Crankshaft journal O.D. Ⓑ		
	Code	A	B	C
Crankcase I.D. Ⓐ	A	Green	Black	Brown
	B	Black	Brown	Yellow

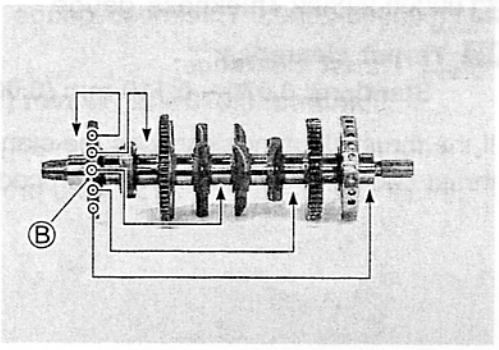

DATA Crankcase I.D. specification

Code	I.D. specification
A	38.000 – 38.008 mm (1.4961 – 1.4964 in)
B	38.008 – 38.016 mm (1.4964 – 1.4967 in)

DATA Crankshaft journal O.D. specification

Code	O.D. specification
A	34.992 – 35.000 mm (1.3776 – 1.3780 in)
B	34.984 – 34.992 mm (1.3773 – 1.3776 in)
C	34.976 – 34.984 mm (1.3770 – 1.3773 in)

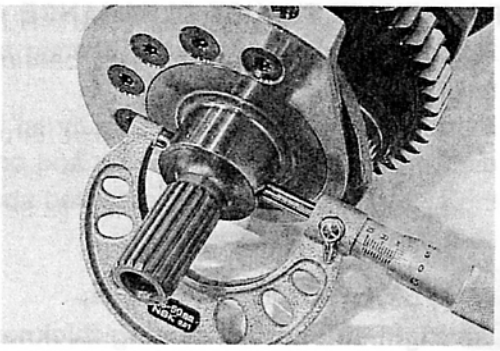

TOOL 09900-20202: Micrometer (25 – 50 mm)

DATA Bearing thickness specification

Color (Part No.)	Thickness
Green (12229-40F00-0A0)	1.488 – 1.492 mm (0.0586 – 0.0587 in)
Black (12229-40F00-0B0)	1.492 – 1.496 mm (0.0587 – 0.0589 in)
Brown (12229-40F00-0C0)	1.496 – 1.500 mm (0.0589 – 0.0591 in)
Yellow (12229-40F00-0D0)	1.500 – 1.504 mm (0.0591 – 0.0592 in)

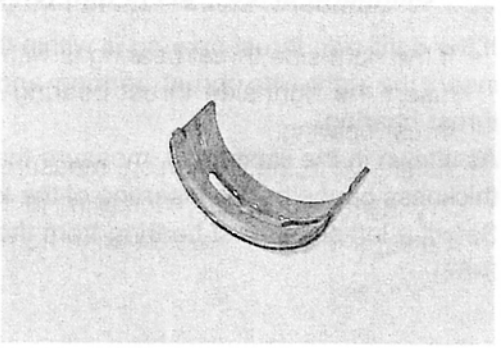

NOTE:
Upper and middle crankshaft journal bearings are the same.

INSTALLATION

- When fitting the crankshaft journal bearings to the upper and lower crankcases, be sure to fix the stopper part Ⓐ first and press the other end.

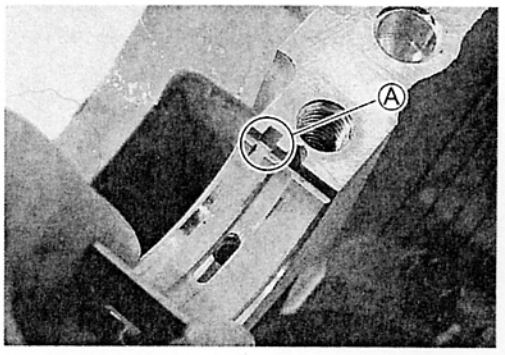

⚠ CAUTION

Do not touch the bearing surfaces with your hands. Grasp by the edge of the bearing shell.

CRANKSHAFT THRUST BEARING

- With the crankshaft, right-side thrust bearing and left-side thrust bearing inserted in the upper crankcase, measure the thrust clearance on the left side by using the thickness gauge.
  Ⓡ: Right-side thrust bearing
  Ⓛ: Left-side thrust bearing

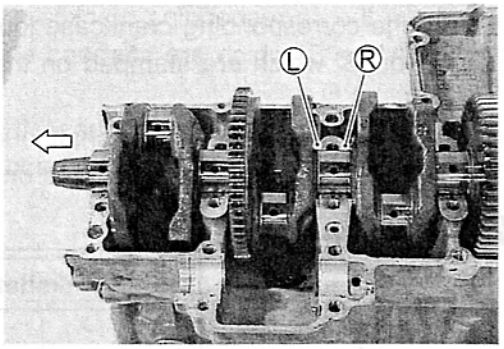

NOTE:
Pull the crankshaft to the left-side, so that there is no clearance on the right-side thrust bearing.

TOOL 09900-20803: Thickness gauge

DATA Thrust clearance:
Standard: 0.070 – 0.110 mm (0.0028 – 0.0043 in)

- If the thrust clearance exceeds the standard range, adjust the thrust clearance by the following procedures.

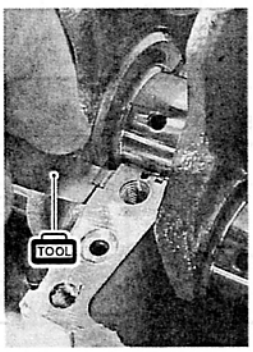

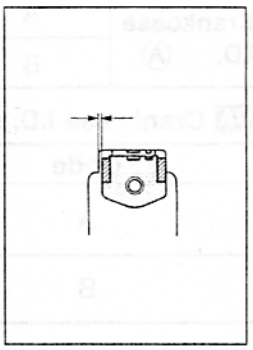

CRANKSHAFT THRUST CLEARANCE ADJUSTMENT

- Remove the right-side thrust bearing and measure its thickness with a micrometer.
- If the thickness of the right-side thrust bearing is below standard, replace it with a new one and once again perform the thrust clearance measurement listed above, checking to make sure it is within standard.

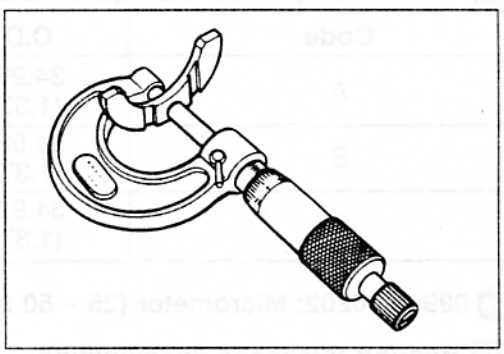

TOOL 09900-20205: Micrometer

DATA Right-side thrust bearing thickness:
Standard: 2.420 – 2.440 mm (0.0953 – 0.0961 in)

- If the right-side thrust bearing is within the standard range, reinsert the right-side thrust bearing and remove the left-side thrust bearing.
- As shown in the illustration, measure the clearance by using a thickness gauge before inserting of the left-side thrust bearing.
- Select a left-side thrust bearing from the selection table. (☞ 3-67)

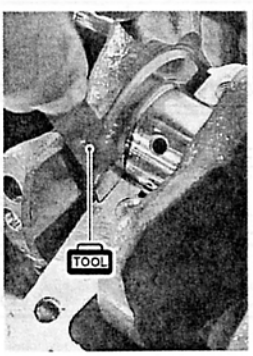

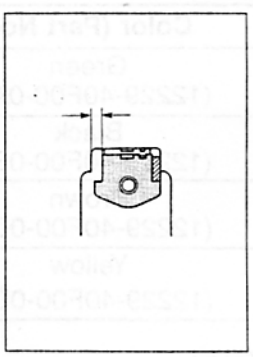

DATA Thrust bearing selection table

Clearance before inserting left-side thrust bearing	Color (Part No.)	Thrust bearing thickness	Thrust clearance
2.570 – 2.590 mm (0.1012 – 0.1020 in)	Brown (12228-48B00-0B0)	2.480 – 2.500 mm (0.0976 – 0.0984 in)	0.070 – 0.110 mm (0.0028 – 0.0043 in)
2.550 – 2.570 mm (0.1004 – 0.1012 in)	Red (12228-48B00-0C0)	2.460 – 2.480 mm (0.0969 – 0.0976 in)	0.070 – 0.110 mm (0.0028 – 0.0043 in)
2.530 – 2.550 mm (0.0996 – 0.1004 in)	Yellow (12228-48B00-0D0)	2.440 – 2.460 mm (0.0961 – 0.0969 in)	0.070 – 0.110 mm (0.0028 – 0.0043 in)
2.510 – 2.530 mm (0.0988 – 0.0996 in)	Green (12228-48B00-0E0)	2.420 – 2.440 mm (0.0953 – 0.0961 in)	0.070 – 0.110 mm (0.0028 – 0.0043 in)
2.490 – 2.510 mm (0.0980 – 0.0988 in)	Blue (12228-48B00-0F0)	2.400 – 2.420 mm (0.0945 – 0.0953 in)	0.070 – 0.110 mm (0.0028 – 0.0043 in)
2.470 – 2.490 mm (0.0972 – 0.0980 in)	Orange (12228-48B00-0G0)	2.380 – 2.400 mm (0.0937 – 0.0945 in)	0.070 – 0.110 mm (0.0028 – 0.0043 in)
2.440 – 2.470 mm (0.0961 – 0.0972 in)	Black (12228-48B00-0H0)	2.360 – 2.380 mm (0.0929 – 0.0937 in)	0.060 – 0.110 mm (0.0024 – 0.0043 in)

- After selecting a left-side thrust bearing, insert it and again perform the thrust clearance measurement to make sure it falls within the standard range.

NOTE:
Right-side thrust bearing has the same specification as the GREEN (12228-48B00-0E0) of left-side thrust bearing.

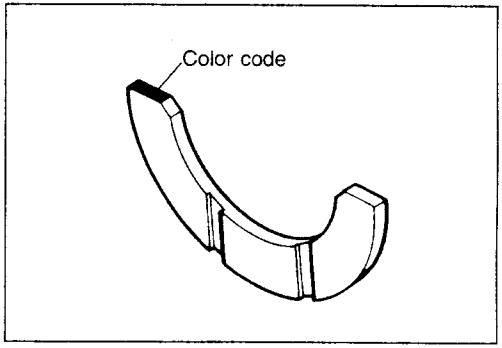

ENGINE REASSEMBLY

- Reassemble the engine in the reverse order of disassembly.
- The following steps require special attention or precautionary measures should be taken.

NOTE:
Apply engine oil to each running and sliding part before reassembling.

- Be sure to install the following items to the crankcase.
  * Crankshaft journal bearing (☞3-64)
  * Gearshift fork (☞3-56)
  * Gearshift fork shaft (☞3-56)
  * Gearshift shaft bearing (☞3-55)
  * Gearshift cam bearing (☞3-55)
  * Gearshift fork bearing (☞3-55)
  * Gearshift cam (☞3-55)
  * Bearing retainer (☞3-56)
  * Oil jets (☞3-57)

PISTON AND CONROD

- Position the gaps of the three rings as shown. Before inserting each piston into the cylinder, check that the gaps are so located.

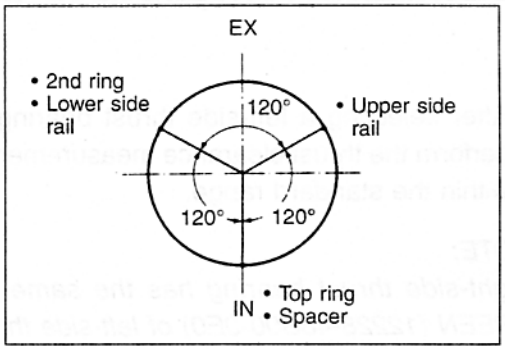

- Rub a small quantity of molybdenum oil solution onto each piston pin.

MOLYBDENUM OIL

- Assemble the piston and conrod.

NOTE:
When installing the pistons, the indent Ⓐ on the piston head must be faced to another side of ID code Ⓑ on conrod face.

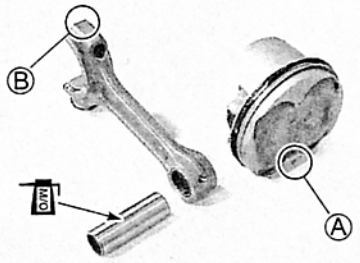

- Install the pistons.

NOTE:
Be sure to install the pistons in the cylinders from which they were removed in disassembly, refer to the cylinder numbers, "1" through "4", scribed on the piston.

- Install the piston pin circlips ①.

⚠ CAUTION

Use new piston pin circlips to prevent circlip failure which will occur with a bend one.

NOTE:
End gap of the circlip should not be aligned with the cutaway in the piston pin bore.

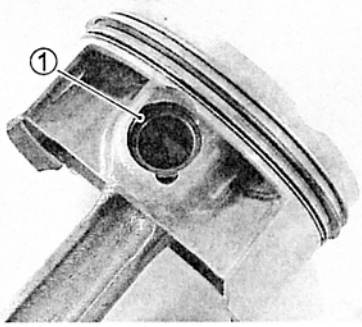

- Apply engine oil to the sliding surface of the pistons and cylinder walls.

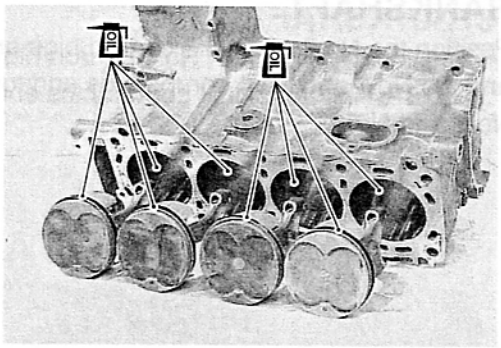

- Install the pistons and conrods into the cylinders from upside.

NOTE:
When installing the pistons, the indent Ⓐ of the piston head must be faced to each exhaust side.

⚠ CAUTION

Be carefull not to damage the cylinder wall and piston jet by the conrod.

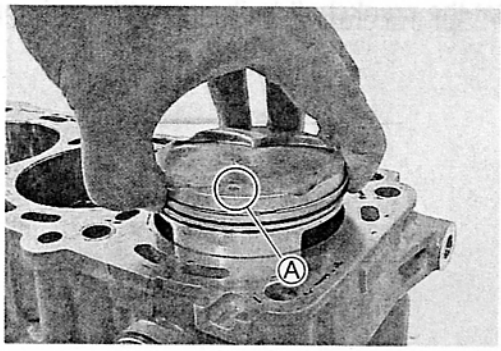

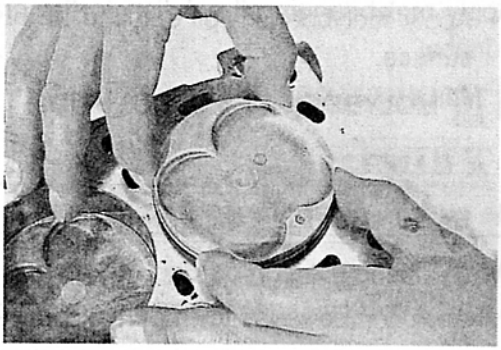

- Check that ID code Ⓑ on the each conrods faces toward intake side.

⚠ CAUTION

Be sure to clean the conrod big end.

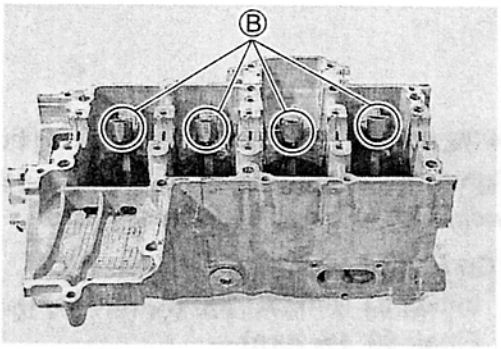

- Apply molybdenum oil solution to the crank pin bearings surface.

MOLYBDENUM OIL SOLUTION

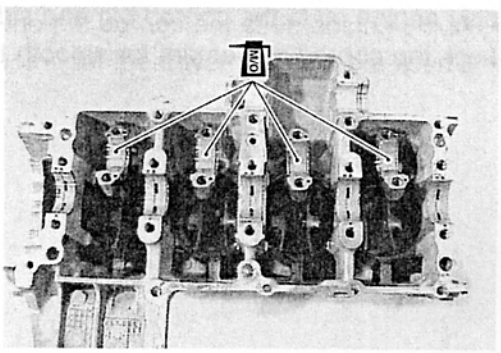

CRANKSHAFT

- Position the No.2 and No.3 conrod bigs end toward same side, and the No.1 and No.4 conrod bigs end toward opposite side of No.2 and No.3.

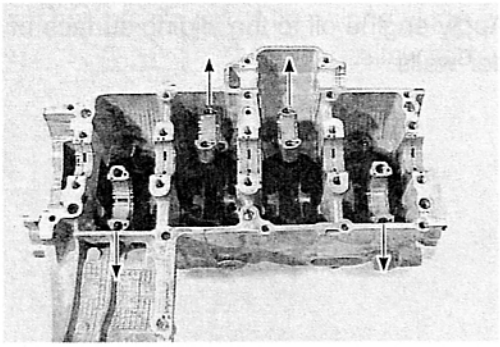

- Set the crankshaft to the conrods and upper crankcase.

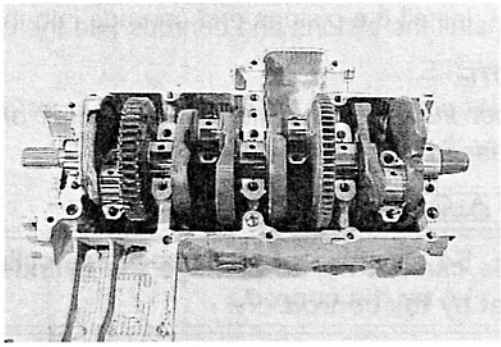

- Apply molybdenum oil solution to the crank pin and bearing surface.

MOLYBDENUM OIL SOLUTION

⚠ CAUTION

Be sure to clean the conrod big end.

- When fitting the conrod cap, make sure that I.D. code Ⓑ on each conrod faces toward intake valve side.

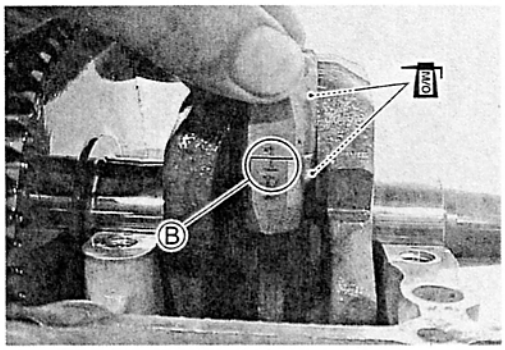

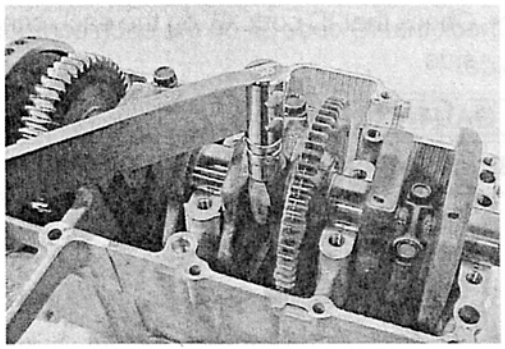

- Apply engine oil to the bearing cap bolts.
- Tighten the bearing cap bolt by using a 12 mm, 12 point socket wrench as following two steps.

Conrod bearing cap bolt:
Initial: 21 N·m (2.1 kgf·m, 15.5 lb-ft)
Final: 90° (¼ turn)

- Apply engine oil to the conrod big end side surfaces.
- Check the conrod movement for smooth turning.

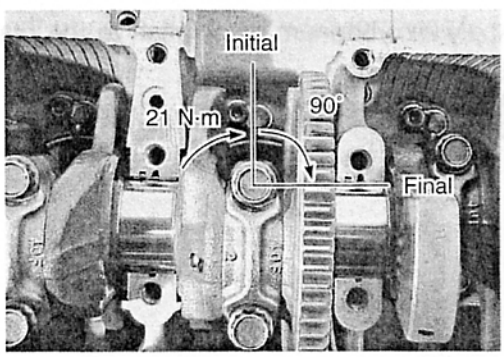

CRANKSHAFT

- Apply molybdenum oil solution to each crankshaft journal bearing lightly.

MOLYBDENUM OIL SOLUTION

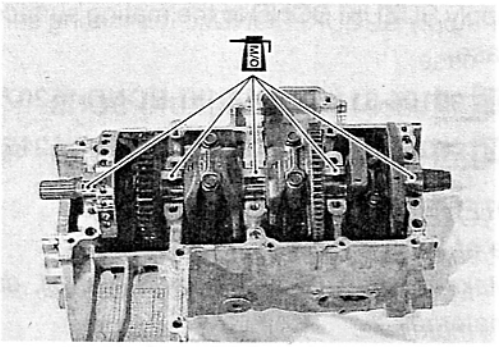

- Insert the right and left-thrust bearings with oil groove Ⓑ facing the crank web..

NOTE:
Right-thrust bearing has green painting.

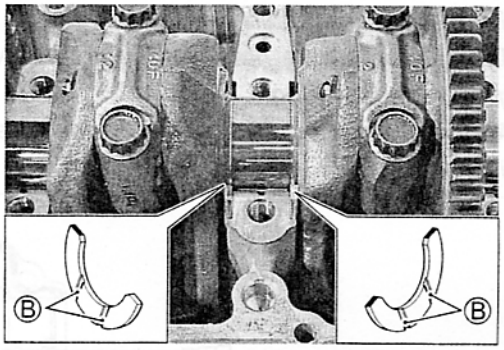

BALANCERSHAFT

- Install the thrust washer ①, ② and oil seal ③.
- Apply molybdenum oil solution to each balancershaft journal lightly.

MOLYBDENUM OIL

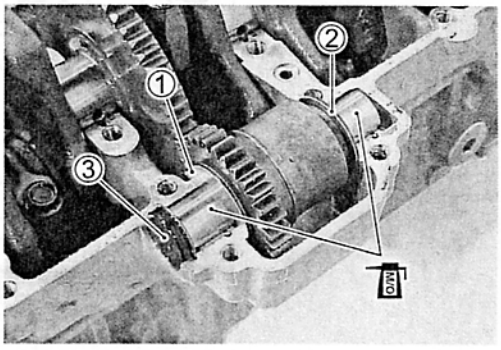

- Set the balancershaft so that its punch mark Ⓐ is aligned with the index Ⓑ on crankshaft.

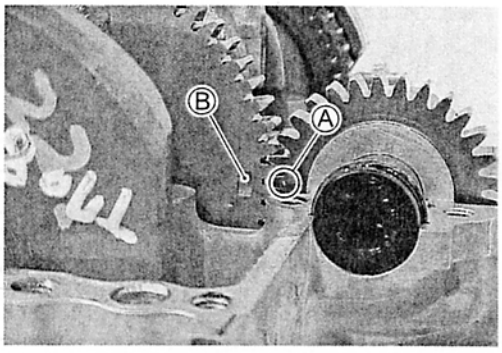

CRANKCASE

- Clean the mating surfaces of the crankcases.
- Install the dowel pins ① and O-ring ② to the upper crankcase.

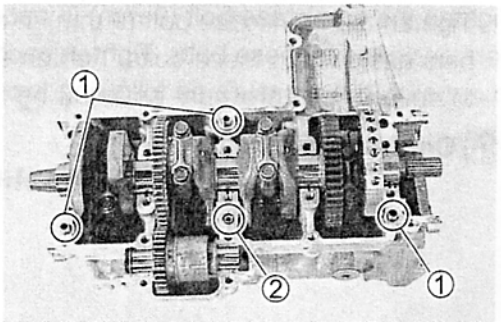

- Apply SUZUKI BOND to the mating surface of the middle crankcase.

1207B 99104-31140: SUZUKI BOND "1207B" (For USA)

1215 99000-31110: SUZUKI BOND "1215" (For the others)

NOTE:
Use of SUZUKI BOND is as follows:
* *Make surfaces free from moisture, oil, dust and other foreign materials.*
* *Spread on surfaces thinly to form an even layer, and assemble the crankcases within few minutes.*
* *Take extreme care not to apply any BOND to the oil hole, oil groove and bearing.*
* *Apply to distorted surfaces as it forms a comparatively thick film.*

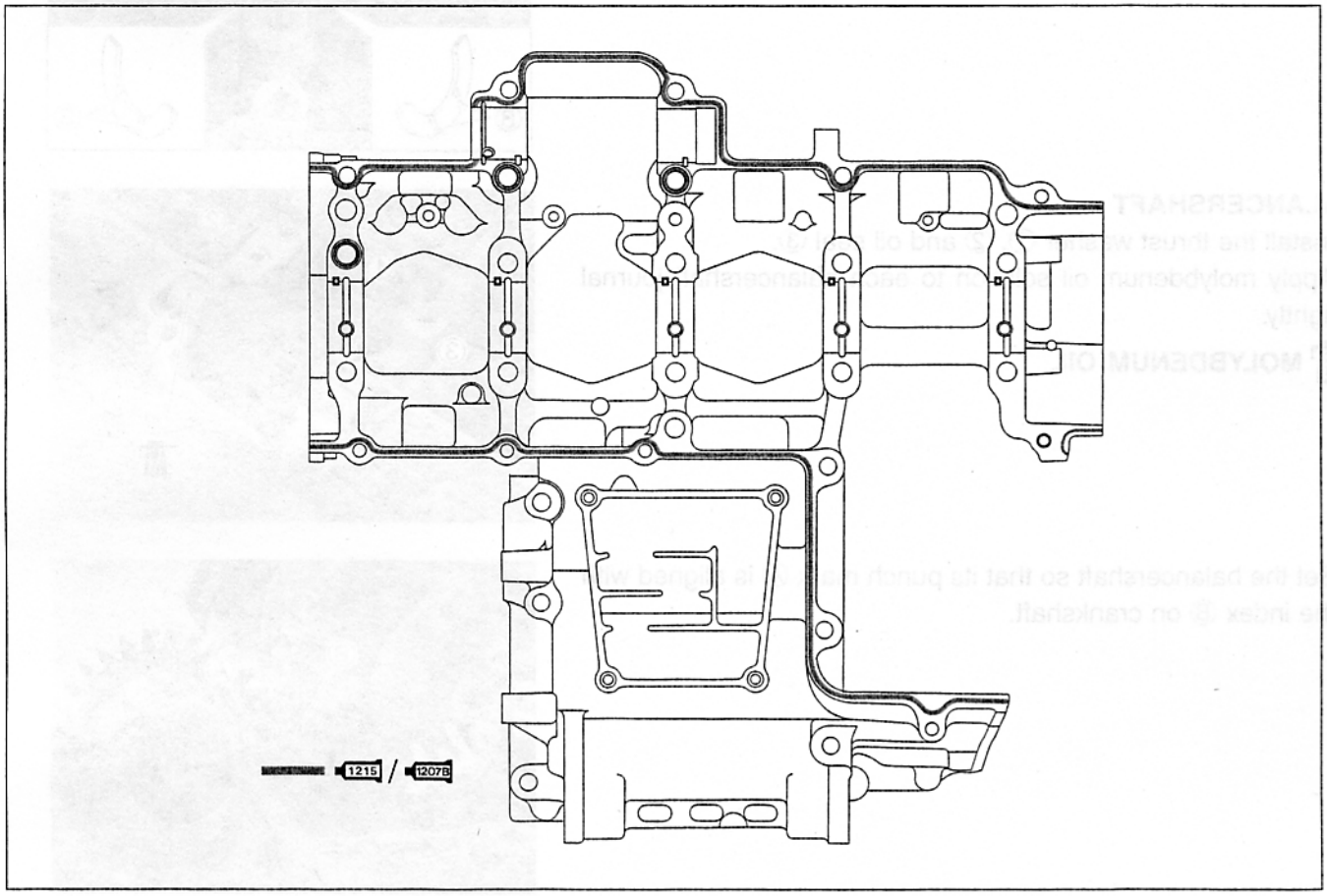

- Tighten the crankcase bolt (9 mm) in ascending order of numbers assigned to these bolts. Tighten each bolt a little at a time to equalize the pressure as following two steps.

Crankcase bolt: (M9)
initial: 18 N·m (1.8 kgf·m, 13.0 lb-ft)
Final: 50°

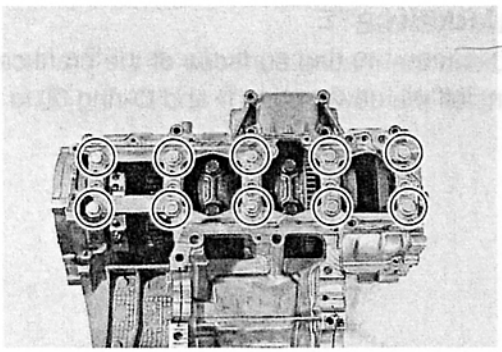

- Tighten the other crankcase bolts a little at a time to equalize the pressure.

Crankcase bolt: (M8) initial: 15 N·m (1.5 kgf·m, 10.8 lb-ft)
Final: 26 N·m (2.6 kgf·m, 19.0 lb-ft)

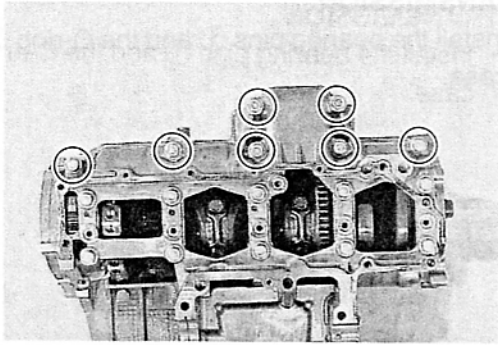

Crankcase bolt: (M6) initial: 6 N·m (0.6 kgf·m, 4.5 lb-ft)
Final: 11 N·m (1.1 kgf·m, 8.0 lb-ft)

NOTE:
Fit the gasket to the crankcase bolt Ⓐ.

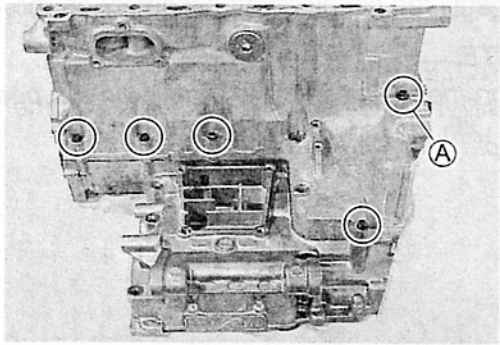

NOTE:
After the crankcase bolts have been tightened, check if the crankshaft rotates smoothly.

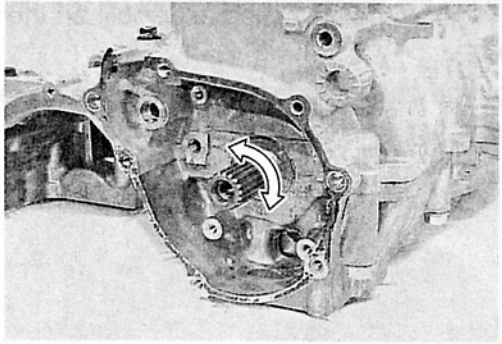

TRANSMISSION

- Install the bearing pins ① and the C-ring ② on the upper crankcase.

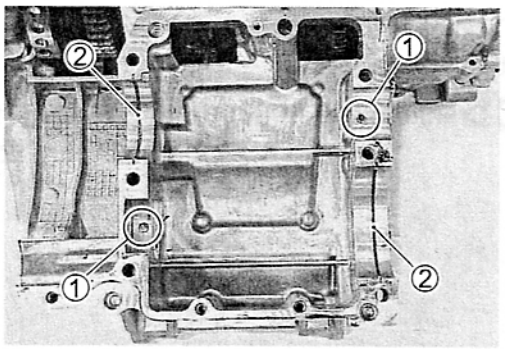

- Install the countershaft assembly on the upper crankcase.

NOTE:
Align the C-ring with the groove on the bearing and the bearing pin with the indent on the bearing.

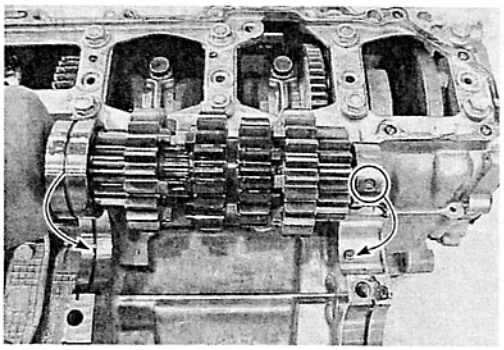

- Install the driveshaft assembly on the upper crankcase.

NOTE:
Align the bearing ring with the groove on the crankcase and the bearing pin with the indent on the bearing.

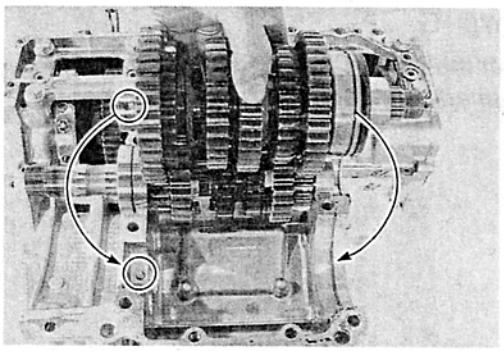

- Install the oil seal ①.
- Turn the bearings to install the bearing dowel pins Ⓐ in the respective positions.

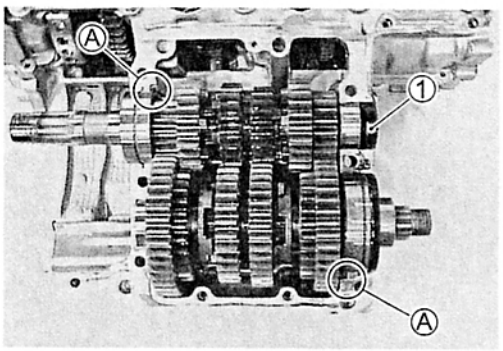

- Install the O-rings.
- Install the dowel pins ①.

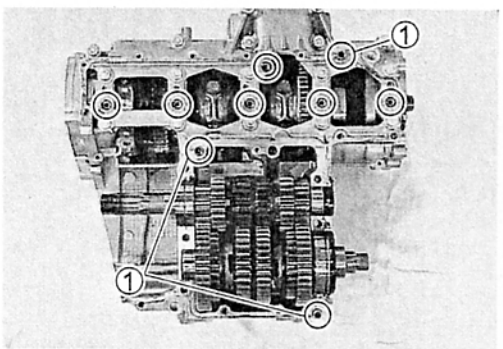

- Apply SUZUKI BOND to the mating surface of the lower crankcase.

1207B 99104-31140: SUZUKI BOND "1207B" (For USA)

1215 99000-31110: SUZUKI BOND "1215" (For the others)

NOTE:
Use of SUZUKI BOND is as follows:
* *Make surfaces free from moisture, oil, dust and other foreign materials.*
* *Spread on surfaces thinly to form an even layer, and assemble the crankcases within few minutes.*
* *Take extreme care not to apply any BOND to the oil hole, oil groove and bearing.*
* *Apply to distorted surfaces as it forms a comparatively thick film.*

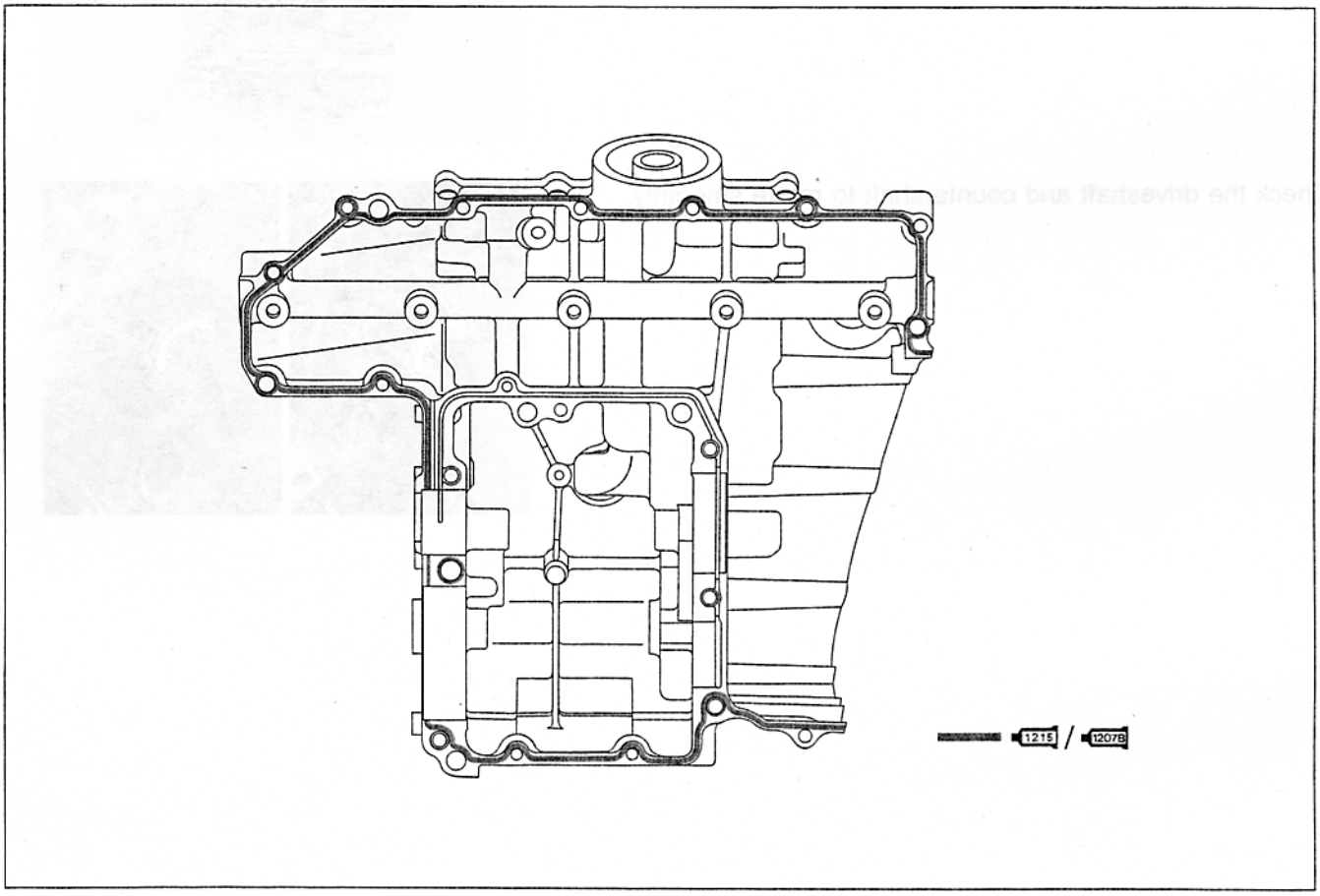

- Match the middle and lower crankcases.

NOTE:
Align the gearshift forks with their grooves.

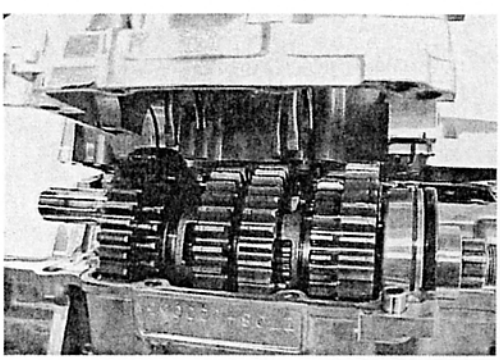

- Tighten the crankcase bolts a little at a time to equalize the pressure.

Crankcase bolt:(M6) initial: 6 N·m (0.6 kgf·m, 4.5 lb-ft)
Final : 11 N·m (1.1 kgf·m, 8.0 lb-ft)
(M8) initial: 15 N·m (1.5 kgf·m, 10.8 lb-ft)
Final : 26 N·m (2.6 kgf·m, 19.0 lb-ft)

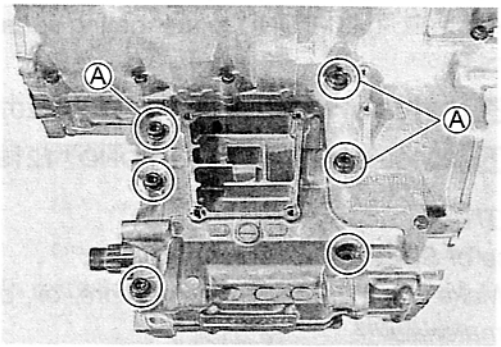

NOTE:

* *Fit the copper washer to the crankcase bolts Ⓐ.*
* *Fit the gasket washer to the crankcase bolts Ⓑ.*

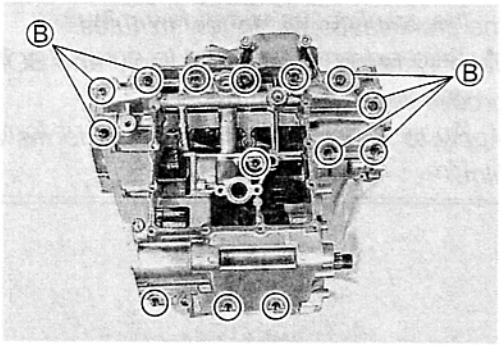

- Check the driveshaft and countershaft to rotate smoothly.

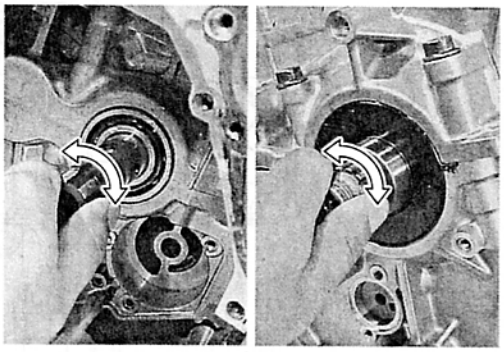

OIL STRAINER

- Install the O-ring.

NOTE:
Apply grease to the O-ring.

99000-25030: SUZUKI SUPER GREASE "A" (For USA)
99000-25010: SUZUKI SUPER GREASE "A" (For the others)

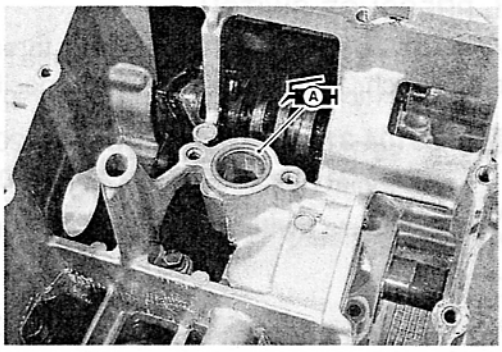

⚠ CAUTION

Use the new O-ring to prevent oil leakage.

- Install the oil strainer as shown.

Oil strainer bolt: 10 N·m (1.0 kgf·m, 7.0 lb-ft)

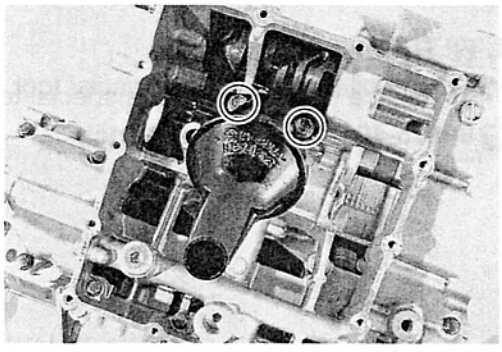

OIL PRESSURE REGULATOR

- Apply grease to the O-ring and press in the oil pressure regulator to the crankcase.

99000-25030: SUZUKI SUPER GREASE "A" (For USA)
99000-25010: SUZUKI SUPER GREASE "A" (For the others)

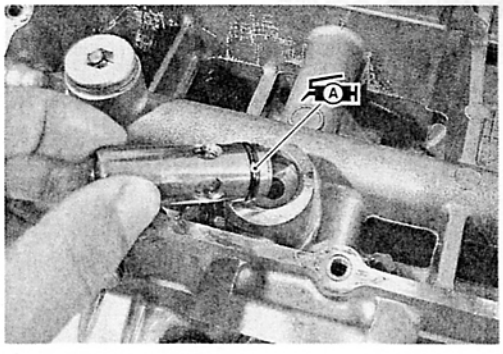

⚠ CAUTION

Use the new O-ring to prevent oil leakage.

OIL PAN

- Install the gasket ①.

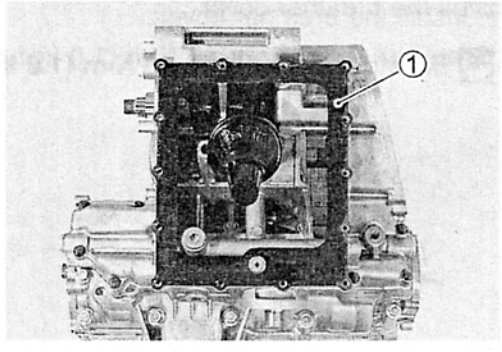

⚠ CAUTION

Use the new gasket to prevent oil leakage.

- Install the oil pan.

NOTE:
Fit the gasket washer to the oil pan bolt Ⓐ.

- Tighten the oil pan bolts diagonally to the specified torque.

Oil pan bolt: 10 N·m (1.0 kgf·m, 7.0 lb-ft)

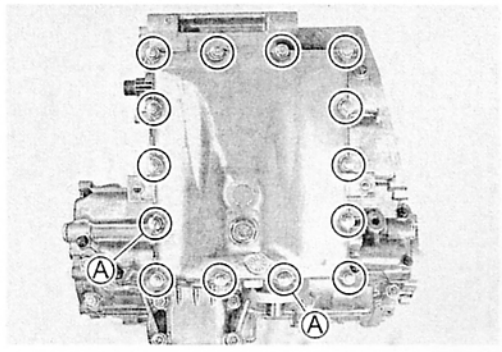

OIL STRAINER

- Install the O-ring.

NOTE:
Apply grease to the O-ring.

99000-25030: SUZUKI SUPER GREASE "A" (For USA)
99000-25010: SUZUKI SUPER GREASE "A" (For the others)

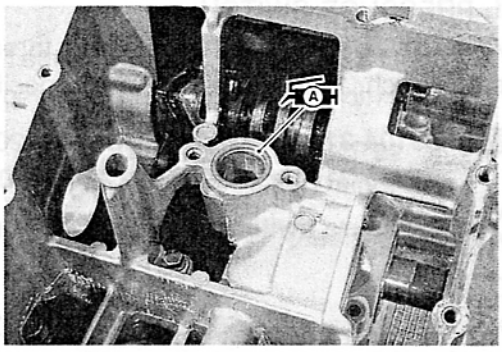

⚠ CAUTION

Use the new O-ring to prevent oil leakage.

- Install the oil strainer as shown.

Oil strainer bolt: 10 N·m (1.0 kgf·m, 7.0 lb-ft)

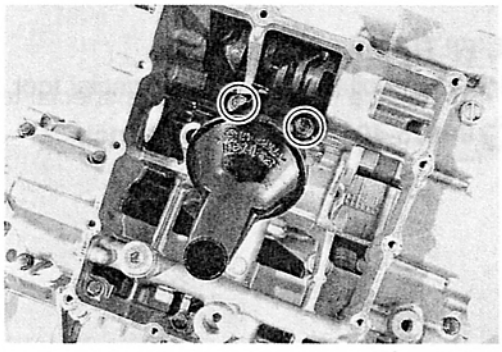

OIL PRESSURE REGULATOR

- Apply grease to the O-ring and press in the oil pressure regulator to the crankcase.

99000-25030: SUZUKI SUPER GREASE "A" (For USA)
99000-25010: SUZUKI SUPER GREASE "A" (For the others)

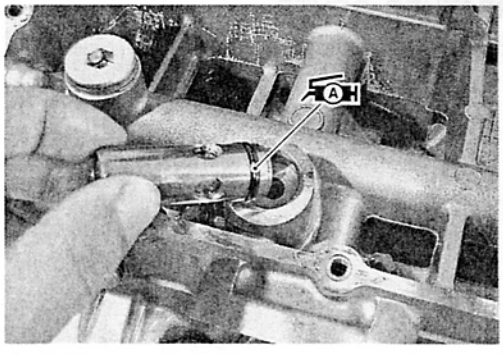

⚠ CAUTION

Use the new O-ring to prevent oil leakage.

OIL PAN

- Install the gasket ①.

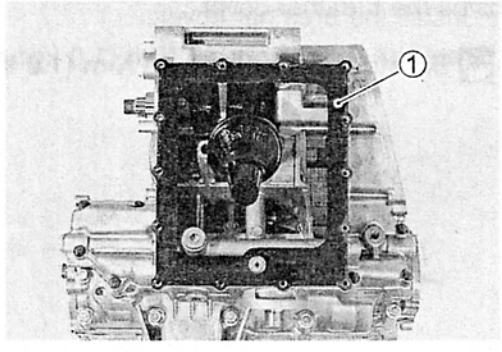

⚠ CAUTION

Use the new gasket to prevent oil leakage.

- Install the oil pan.

NOTE:
Fit the gasket washer to the oil pan bolt Ⓐ.

- Tighten the oil pan bolts diagonally to the specified torque.

Oil pan bolt: 10 N·m (1.0 kgf·m, 7.0 lb-ft)

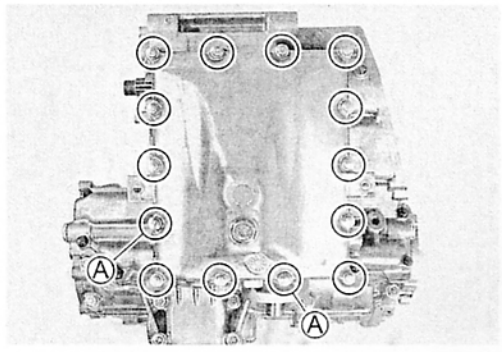

OIL PRESSURE SWITCH

- Apply SUZUKI BOND "1207B" to the thread part of the oil pressure switch ① and tighten it to the specified torque.

1207B 99104-31140: SUZUKI BOND "1207B" (For USA)
99000-31140: SUZUKI BOND "1207B" (For the others)

Oil pressure switch: 14 N·m (1.4 kgf·m, 10.0 lb-ft)

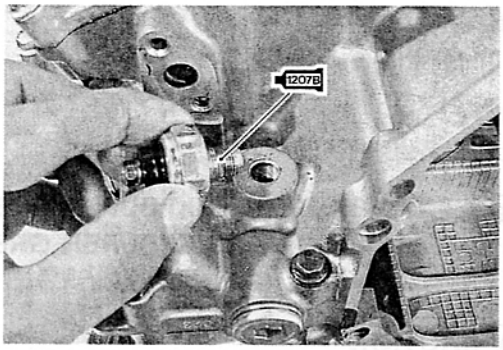

NOTE:
Be careful not to apply SUZUKI BOND "1207B" to the hole of the thread end.

OIL FILTER

- Install the oil filter using the special tool. (☞2-13)

TOOL 09915-40610: Oil filter wrench

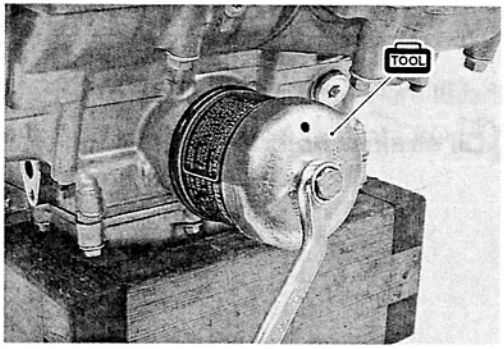

BREATHER COVER

- Install the gasket.

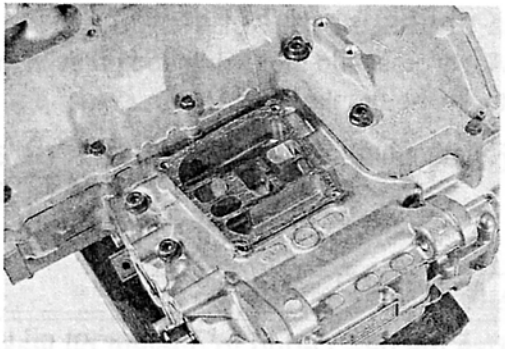

- Install the breather cover.

Breather cover bolt: 10 N·m (1.0 kgf·m, 7.0 lb-ft)

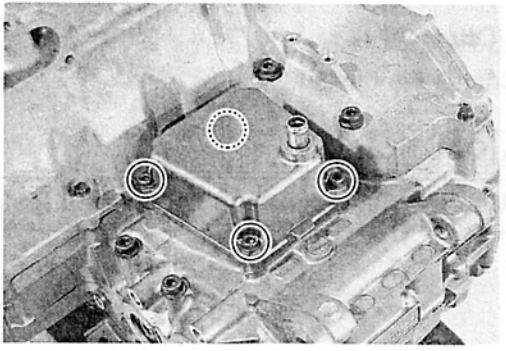

GEAR POSITION SWITCH

- Install the gear position switch contacts ① and the springs ②.

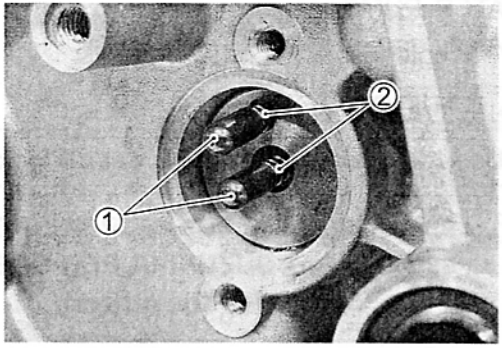

- Apply the grease to the O-ring.

99000-25030: SUZUKI SUPER GREASE "A" (For USA)
99000-25010: SUZUKI SUPER GREASE "A" (For the others)

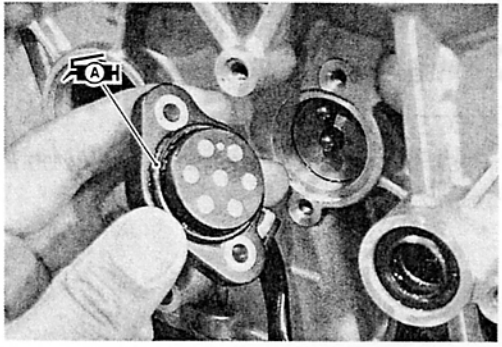

- Install the gear position switch as shown.

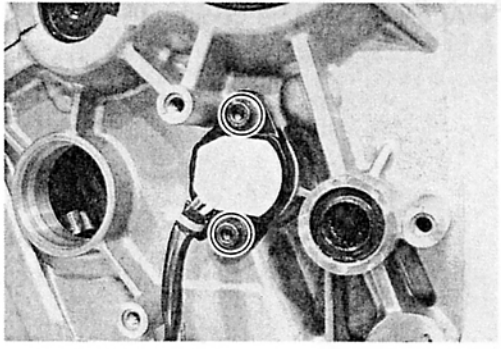

WATER PUMP

- Apply grease to the O-ring.

⚠ CAUTION

Use the new O-ring to prevent oil leakage.

99000-25030: SUZUKI SUPER GREASE "A" (For USA)
99000-25010: SUZUKI SUPER GREASE "A" (For the others)

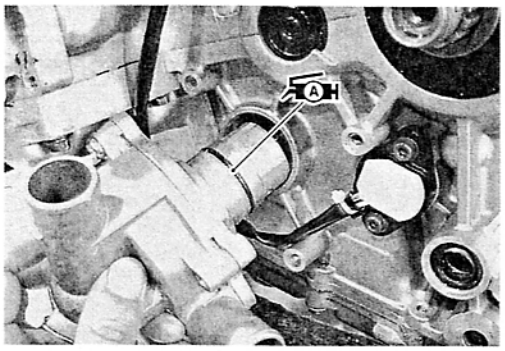

- Tighten the water pump mounting bolts to the specified torque.

Water pump mounting bolt: 10 N·m (1.0 kgf·m, 7.0 lb-ft)

NOTE:
Pass through the gear position switch lead wire under the warter pump lib Ⓐ.

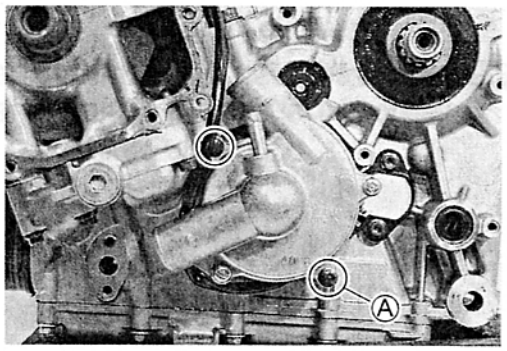

- Apply the engine coolant to the O-ring.

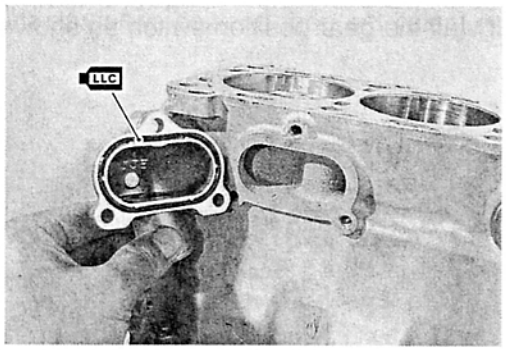

- Install the water inlet cover.

Water inlet cover bolt: 10 N·m (1.0 kgf·m, 7.0 lb-ft)

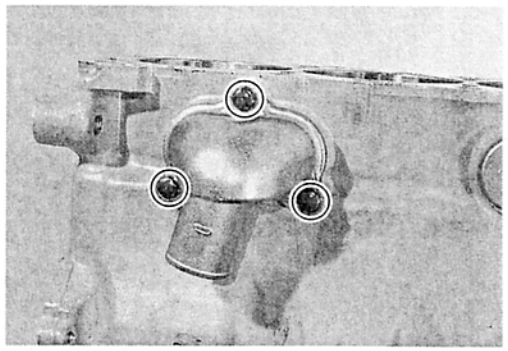

- Install the radiator hoses. (☞8-19)

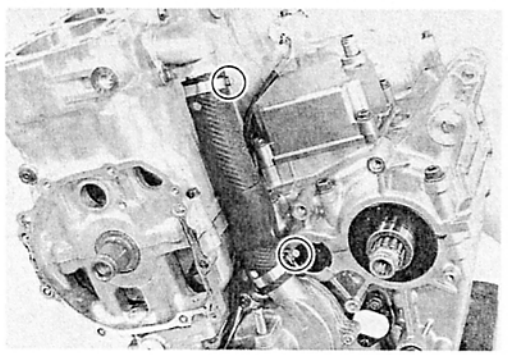

GENERATOR ROTOR

- Degrease the tapered portion of the generator rotor and also the crankshaft. Use nonflammable cleaning solvent to wipe off oily or greasy matter and make these surfaces completely dry.

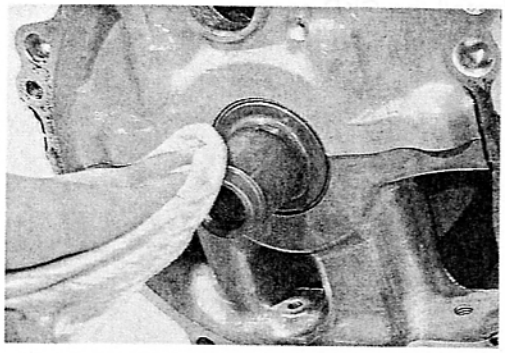

- Install the generator rotor onto the crankshaft.
- Install the rotor bolt with the washer.
- Holding the generator rotor with the special tool and tighten its bolt to the specified torque.

TOOL 09930-44520: Rotor holder

Generator rotor bolt: 120 N·m (12.0 kgf·m, 88.5 lb-ft)

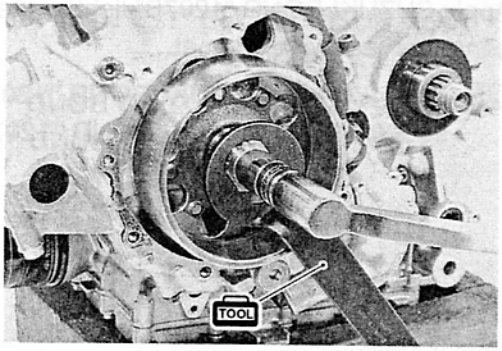

GENERATOR COVER

- Apply SUZUKI BOND "1207B" lightly to the mating surfaces at the parting line between the upper and lower crankcases as shown.

1207B 99104-31140: SUZUKI BOND "1207B" (For USA)
99000-31140: SUZUKI BOND "1207B" (For the others)

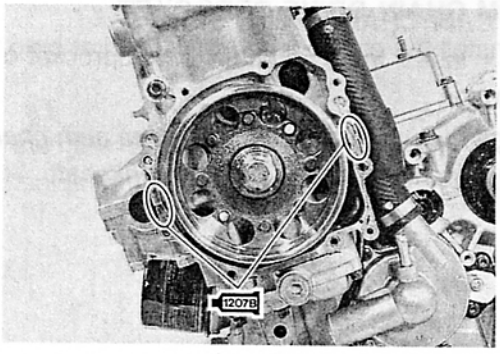

- Install the dowel pins and new gasket ①.

⚠ CAUTION

Use the new gaskets to prevent oil leakage.

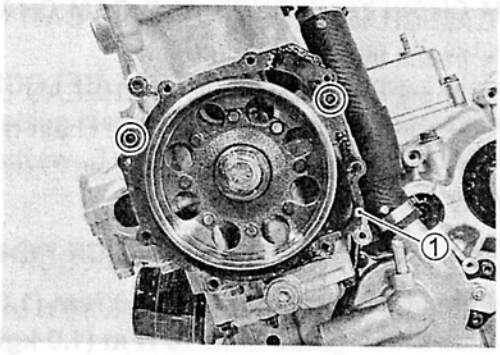

- Install the generator cover and tighten the generator cover bolts to the specified torque.

Generator cover bolt: 10 N·m (1.0 kgf·m, 7.0 lb-ft)

⚠ WARNING

Be careful not to pinch the finger between the generator cover and the crankcase.

NOTE:
Fit the gasket washer to the bolts Ⓐ.

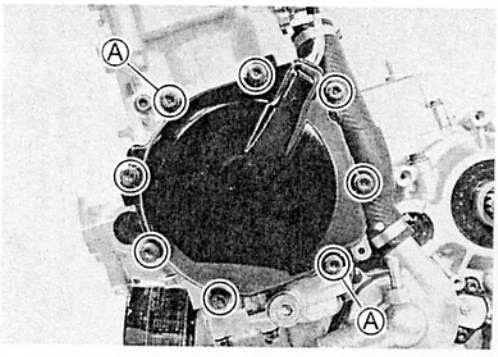

- Install the CKP sensor.

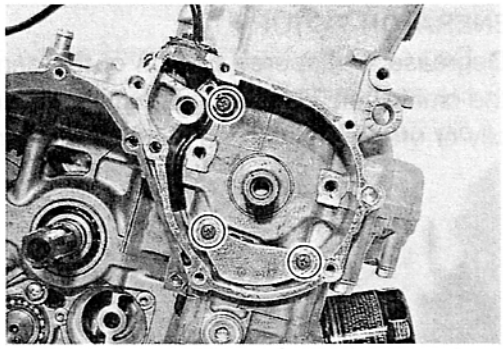

- Apply SUZUKI BOND "1207B" light to the groove of the signal generator lead wire gromet.

1207B **99104-31140: SUZUKI BOND "1207B" (For USA)**
99000-31140: SUZUKI BOND "1207B" (For the others)

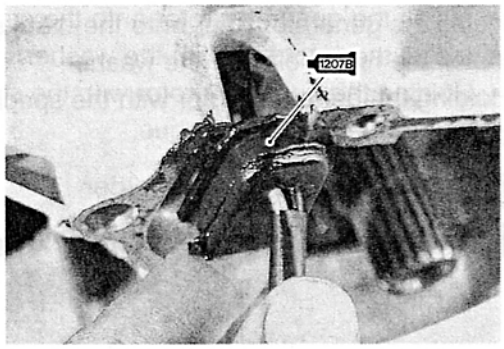

CAM CHAIN DRIVE SPROCKET

- Install the cam chain drive sprocket onto the crankshaft.

NOTE:
Align the punched mark Ⓐ on the cam chain drive sprocket with the punched mark Ⓑ on the crankshaft.

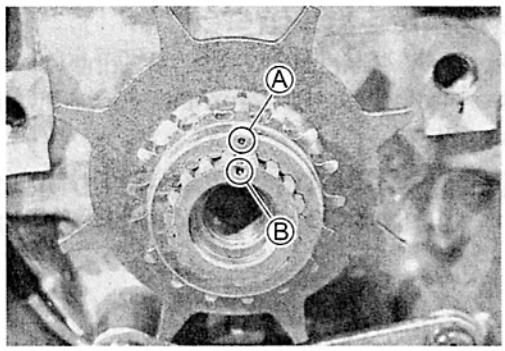

CAM CHAIN TENSIONER AND CAM CHAIN GUIDE

- Install the cam chain.
- Apply a small quantity of THREAD LOCK "1342" to the cam chain tensioner bolt and cam chain guide bolt.
- Install the cam chain tensioner ①, washer ② and cam chain guide ③.

1342 **99000-32050: THREAD LOCK "1342"**

Cam chain tensioner bolt: 10 N·m (1.0 kgf·m, 7.0 lb-ft)
Cam chain guide bolt: 10 N·m (1.0 kgf·m, 7.0 lb-ft)

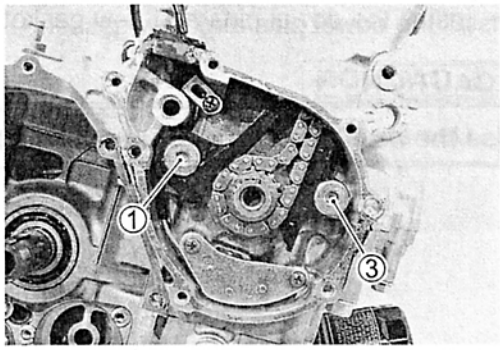

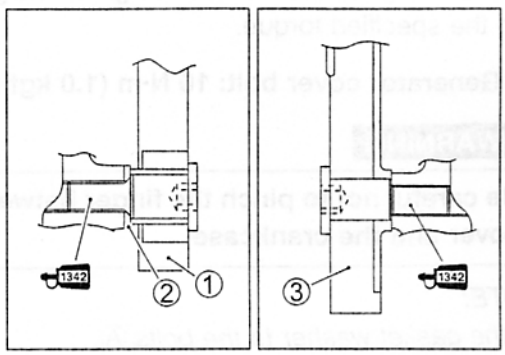

STARTER CLUTCH

- Install the washer ①.

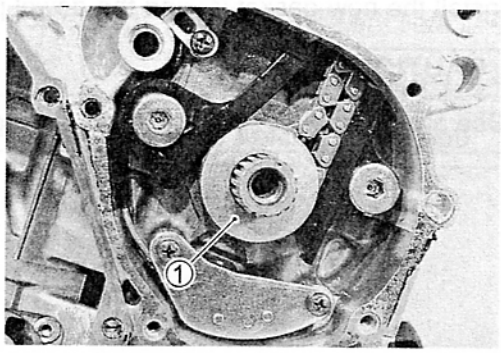

- Install the starter clutch assembly onto the crankshaft.

NOTE:
Align the engraved line Ⓐ on the starter clutch with the punched mark Ⓑ on the crankshaft.

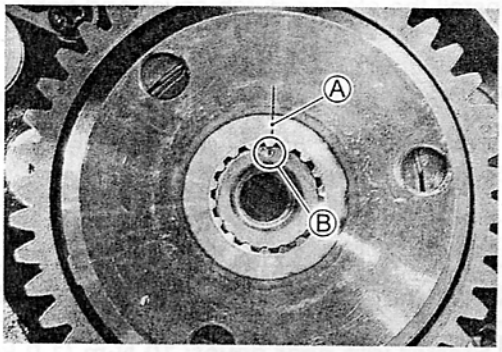

- Install the starter clutch bolt with the washer.
- Hold the starter clutch with special tool and tighten its bolt to the specified torque.

TOOL 09920-34830: Starter clutch holder

Starter clutch bolt: 55 N·m (5.5 kgf·m, 40.0 lb-ft)

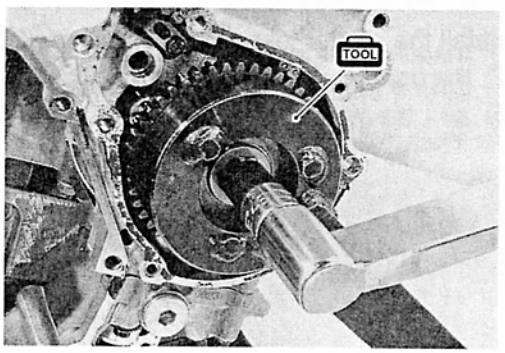

STARTER IDLE GEAR

- Install the starter idle gear No.2 ① its shaft ② and the wave washer ③.

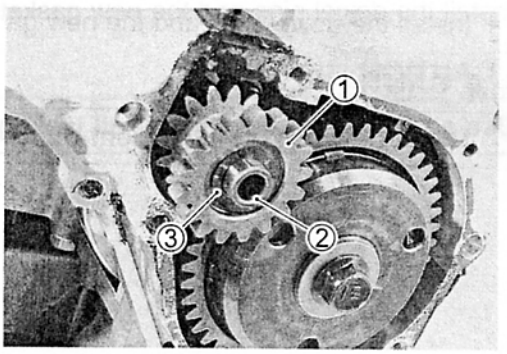

- Apply SUZUKI BOND "1207B" lightly to the mating surfaces Ⓐ at the parting line between the upper and lower crankcases and surface Ⓑ as shown.

1207B 99104-31140: SUZUKI BOND "1207B" (For USA)
99000-31140: SUZUKI BOND "1207B" (For the others)

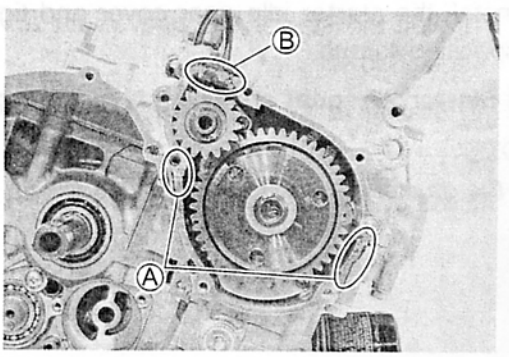

- Install the new gasket ① and the dowel pins.

⚠ CAUTION

Use a new gasket to prevent oil leakage.

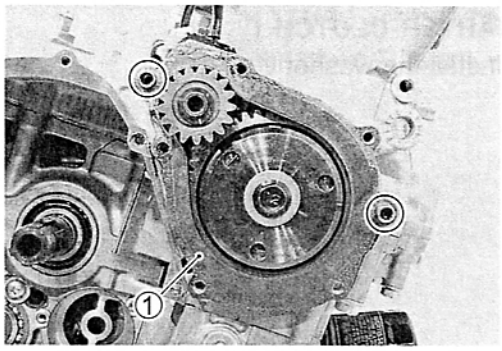

- Install the starter clutch cover and tighten its bolt as shown.

NOTE:

* *Fit the wire clamp to the starter clutch cover bolt Ⓐ as shown.*

* *Fit the new gasket washer to the starter clutch cover bolt Ⓑ as shown.*

⚠ CAUTION

Use the new gasket washer to prevent oil leakage.

Starter idle gear cover: 10 N·m (1.0 kgf·m, 7.0 lb-ft)

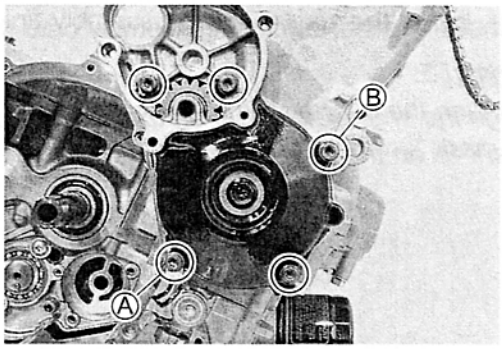

- Install the starter idle gear No.1 shaft ① and the thrust washer ② the bearing ③ and the starter idle gear No.1 ④ the washer ⑤ and the wave washer ⑥.

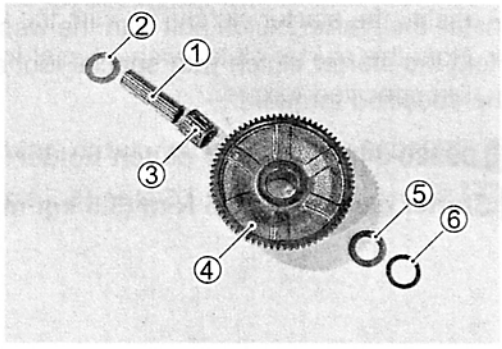

- Install the dowel pins and the new gasket ⑦.

⚠ CAUTION

Use a new gasket to prevent oil leakage.

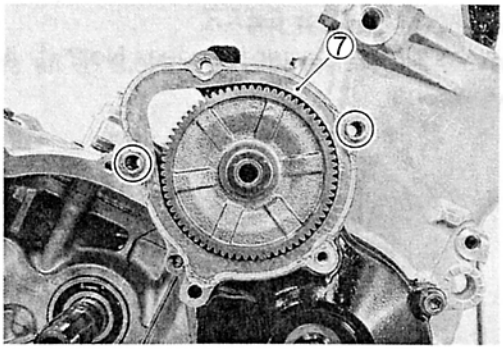

- Install the starter idle gear cover and tighten its bolts to the specified torque.

Starter idle gear cover: 10 N·m (1.0 kgf·m, 7.0 lb-ft)

NOTE:

Fit the gasket washer to the bolt Ⓐ.

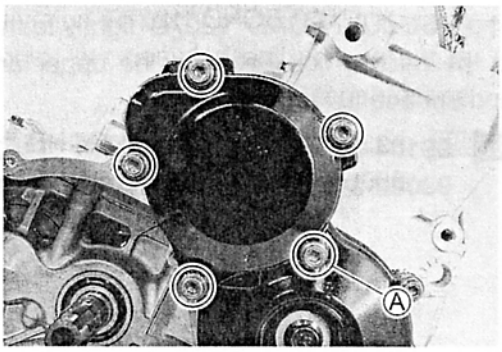

GEARSHIFT SYSTEM

- Install the gearshift cam stopper ①, its bolt ②, the washer ③ and the return spring ④.

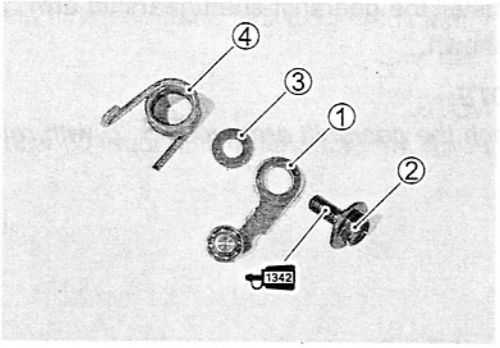

NOTE:
Apply a small quantity of THREAD LOCK "1342" to the gearshift cam stopper bolt ② and tighten it to the specified torque.

1342 99000-32050: THREAD LOCK "1342"

Gearshift cam stopper bolt: 10 N·m (1.0 kgf·m, 7.0 lb-ft)

NOTE:
Hook the return spring end to the stopper ①.

- Confirm the gearshift cam stopper movement.
- Check the neutral position.

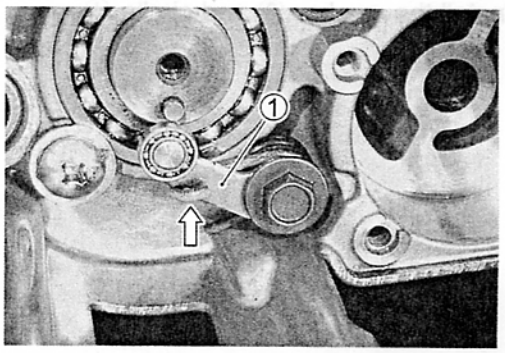

- Install the gearshift cam stopper plate after aligning the gearshift cam pin Ⓐ with the gearshift cam stopper plate hole Ⓑ.

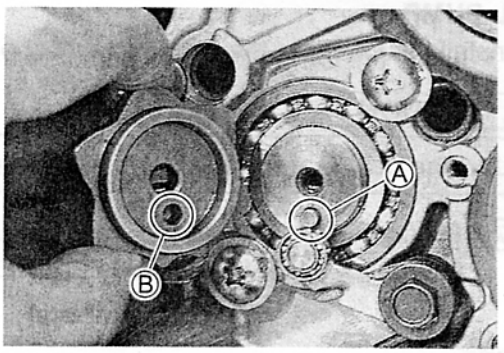

- Apply a small quantity of THREAD LOCK "1342" to the gearshift cam stopper plate bolt and tighten it to the specified torque.

1342 99000-32050: THREAD LOCK "1342"

Gearshift cam stopper plate bolt: 10 N·m (1.0 kgf·m, 7.0 lb-ft)

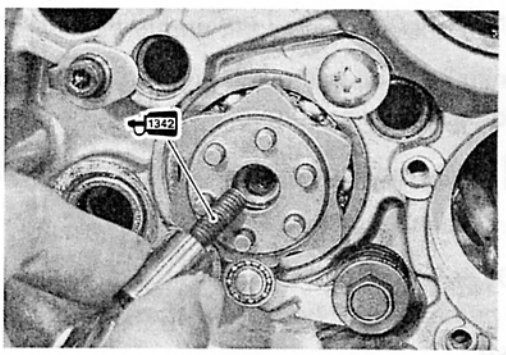

- Install the gearshift shaft/gearshift arm ① with the washers as shown.

NOTE:
Pinch the gearshift arm stopper ② with return spring ends Ⓐ.

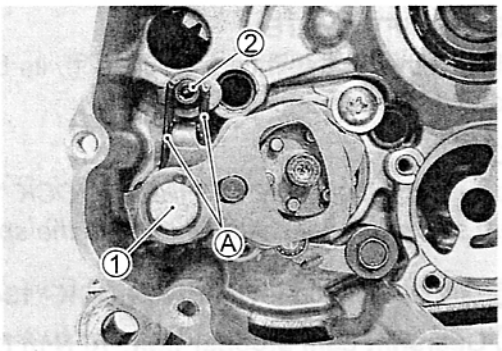

- Install the washer ③ and circlip ④.

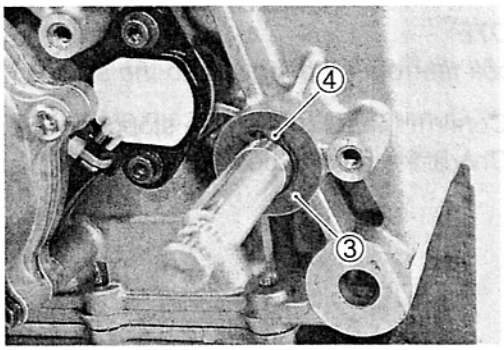

OIL PUMP

- Install the O-ring to the oil pump and apply grease to it.

⚠ CAUTION

Use the new O-ring to prevent oil leakage.

99000-25030: SUZUKI SUPER GREASE "A" (For USA)
99000-25010: SUZUKI SUPER GREASE "A" (For the others)

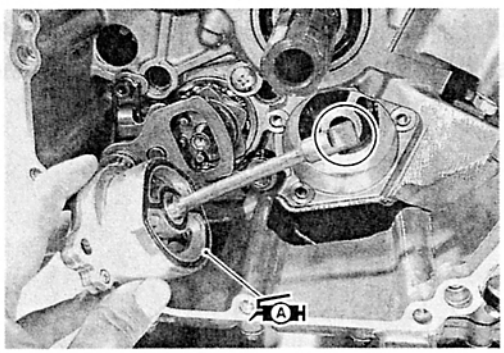

NOTE:
Set the oil pump shaft end to the water pump shaft.

- Install the oil pump with the three bolts and then tighten them to the specified torque.

Oil pump mounting bolts: 10 N·m (1.0 kgf·m, 7.0 lb-ft)

- Install the washer ① and the pin ②.

NOTE:
Be careful not to drop the washer ① and the pin ② into the crankcase.

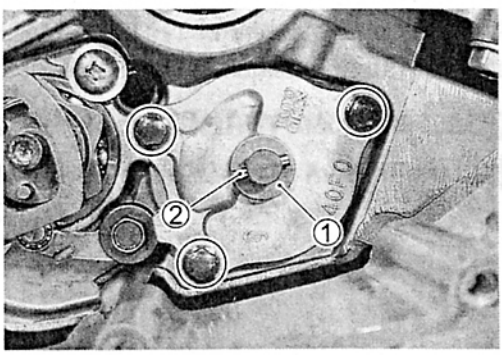

- Install the oil pump driven gear ③.
- Install the circlip ④.

TOOL 09900-06107: Snap ring pliers

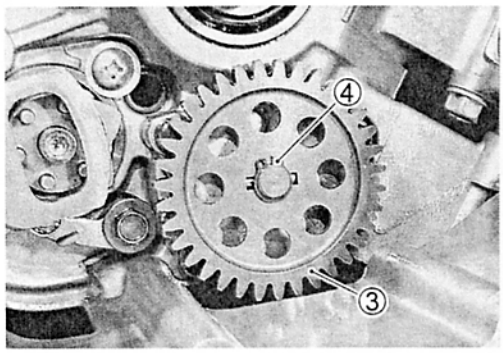

CLUTCH

- Install the thrust washer onto the countershaft.

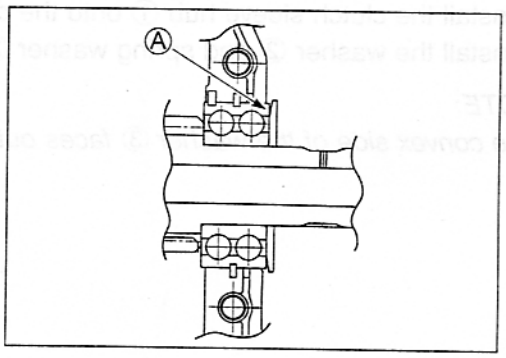

NOTE:
The chamfer side Ⓐ of the thrust washer faces inner side.

- Install the oil pump drive gear ① to the primary driven gear assembly.

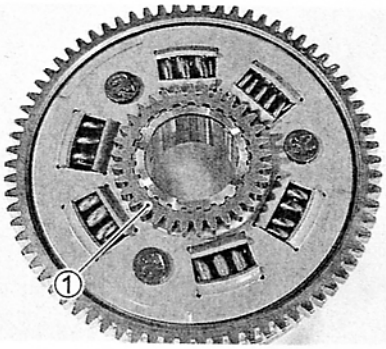

NOTE:
Be careful not to contact the primary driven gear with the crankweb when installing the clutch housing.

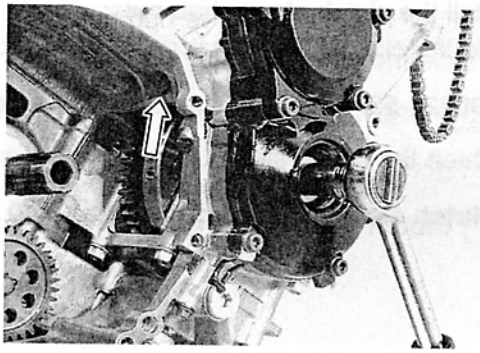

- Install the primary driven gear assembly.

NOTE:
Be sure to engage the oil pump drive and driven gears, primary drive and driven gears.

- Install the bearing ① and spacer ② and apply engine oil to them.

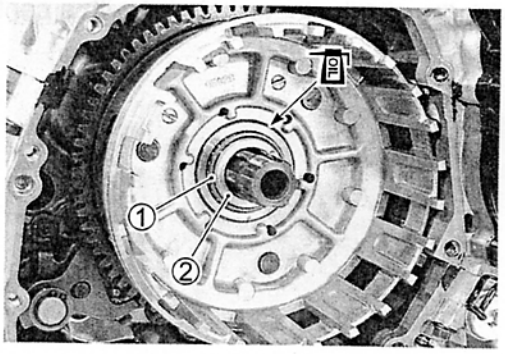

- Install the thrust washer ③.

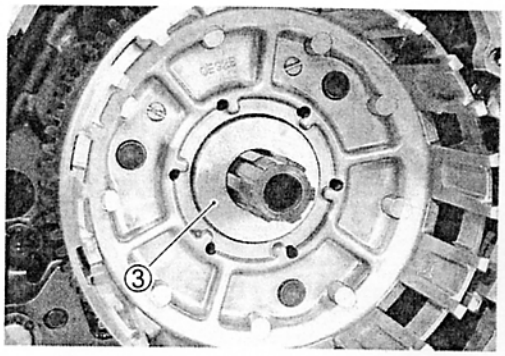

- Install the clutch sleeve hub ① onto the countershaft.
- Install the washer ② and spring washer ③.

NOTE:
The convex side of the washer ③ faces outside.

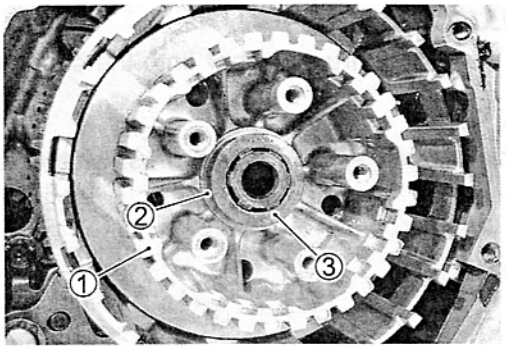

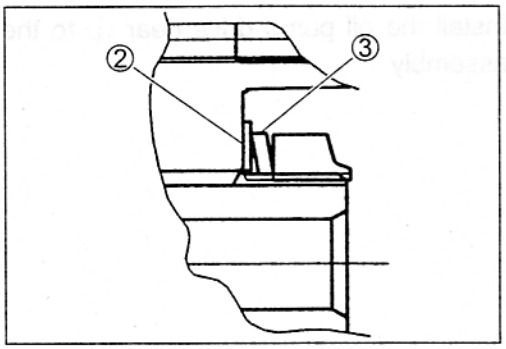

- Install the clutch sleeve hub nut.
- Hold the clutch sleeve hub using the special tool.

09920-53740: Clutch sleeve hub holder

- Tighten the clutch sleeve hub nut to the specified torque.

Clutch sleeve hub nut: 150 N·m (15.0 kgf·m, 108 lb-ft)

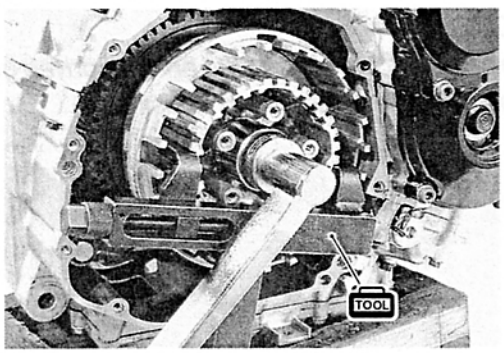

- Lock the clutch sleeve hub nut with a center punch.

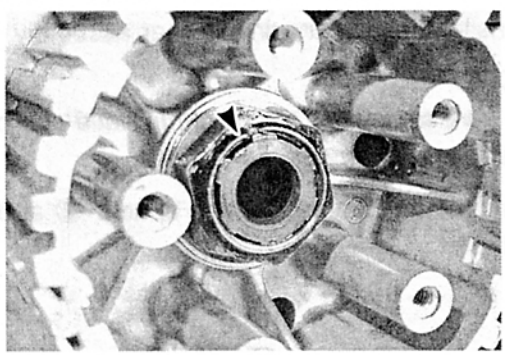

- Insert the clutch drive plates and driven plates one by one into the clutch sleeve hub in the prescribed order.

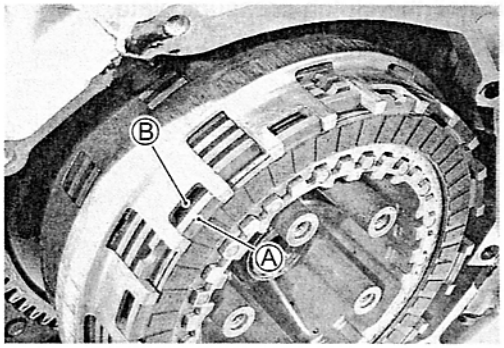

NOTE:
Insert the outermost No.1 drive plate claws Ⓐ to the other slits Ⓑ of clutch housing as shown.

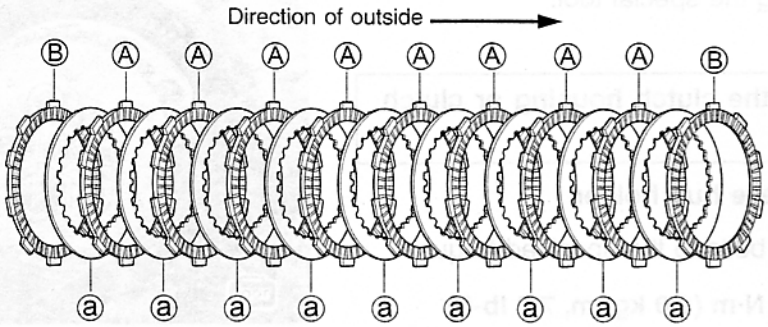

DRIVE PLATE:
Ⓐ No.1 Drive Plate ... 8 pcs [Green paint]
Ⓑ No.2 Drive Plate ... 2 pcs [Brown paint]

DRIVEN PLATE:
ⓐ No.1 Driven Plate (Thickness): 2.3 mm (0.091 in) ... 8-9 pcs
ⓑ No.2 Driven Plate (Thickness): 2.0 mm (0.079 in) ... 0-1 pc
ⓒ No.3 Driven Plate (Thickness): 2.6 mm (0.102 in) ... 0-1 pc
} Total 9 pcs

NOTE:
It is not necessary to use the No. 2 driven plate ⓑ and the No. 3 driven plate ⓒ when replacing the driven plates with the new ones. Because, they are factory setting parts.

- Install the clutch push rod ① into the countershaft.

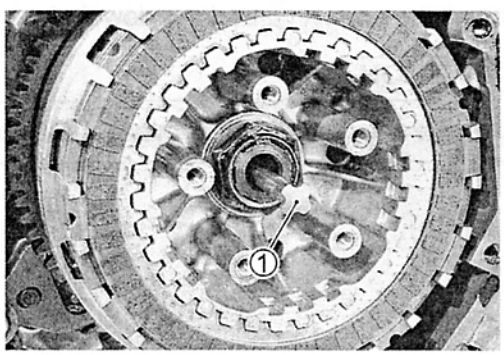

- Install the clutch push piece ②, the bearing ③ and the thrust washer ④ to the countershaft.

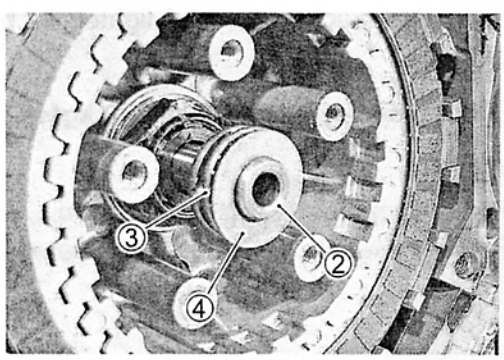

NOTE:
Thrust washer ④ is located between the pressure plate and the bearing ③.

- Install the clutch pressure plate.
- Install the clutch springs.

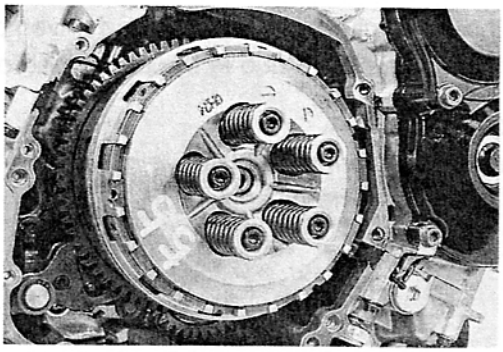

- Hold the clutch housing using the special tool.

⚠ CAUTION

Be careful not to damage the clutch housing or clutch plates.

TOOL 09920-53740: Clutch sleeve hub holder

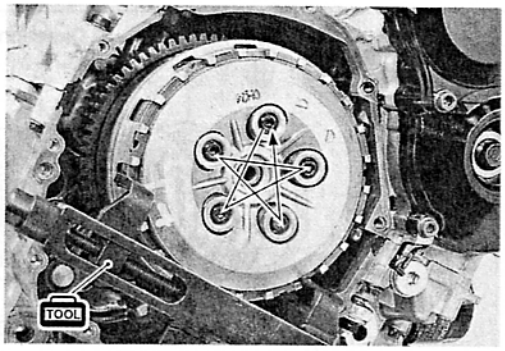

- Tighten the clutch spring set bolts to the specified torque.

Clutch spring set bolt: 10 N·m (1.0 kgf·m, 7.0 lb-ft)

NOTE:
Tighten the clutch spring set bolts diagonally.

CLUTCH COVER

- Apply SUZUKI BOND "1207B" lightly to the mating surfaces at the parting line between the upper, middle and lower crankcases as shown.

1207B 99104-31140: SUZUKI BOND "1207B" (For USA)
99000-31140: SUZUKI BOND "1207B" (For the others)

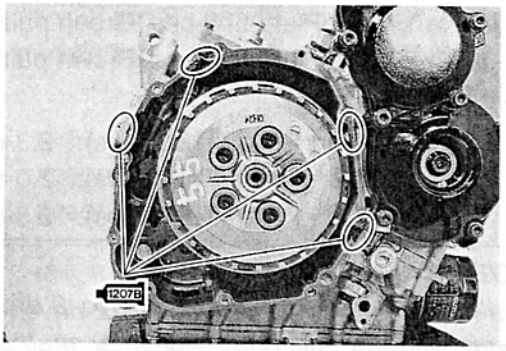

- Install the gasket ① and the dowel pins.

⚠ CAUTION

Use the new gasket to prevent oil leakage.

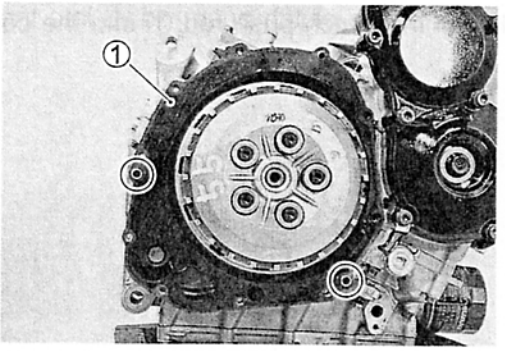

- Install the clutch cover and tighten its bolts to the specified torque.

Clutch cover bolt: 10 N·m (1.0 kgf·m, 7.0 lb-ft)

NOTE:
* *Fit the clamp to the bolt Ⓐ as shown.*
* *Fit the gaskets to the bolts Ⓑ as shown.*

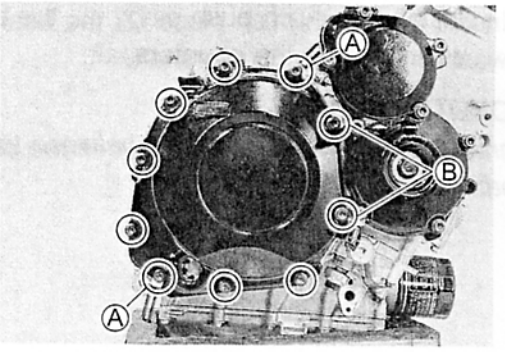

CYLINDER HEAD

- Fit the dowel pins and the new cylinder head gasket ① to the cylinder.

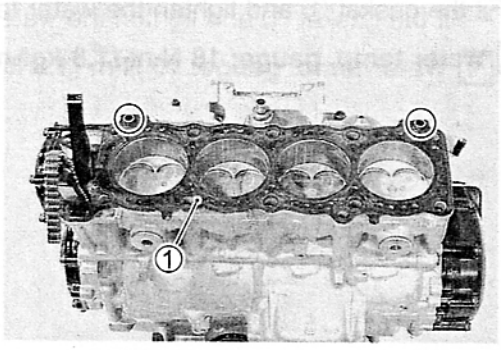

⚠ CAUTION

Use the new gasket to prevent gas leakage.

- Place the cylinder head on the cylinder.

- Install the cylinder head side bolt ② and gasket ③ and tighten it to the specified torque.

Cylinder head side bolt: 14 N·m (1.4 kgf·m, 10.0 lb-ft)

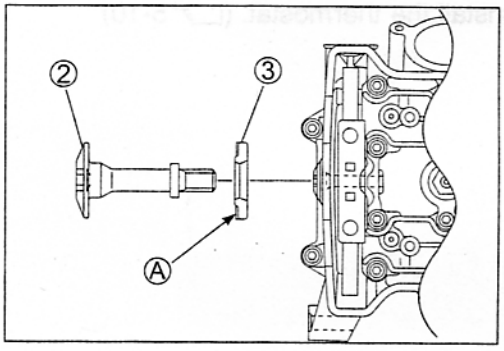

NOTE:

* *The metal side of the gasket Ⓐ faces out.*

* *Install the cylinder head side bolt between the cam chain.*

NOTE:

When installing the cylinder head, keep the cam chain taut.

- Tighten the cylinder head bolts (M10) to the specified two-step torque with a torque wrench sequentially and diagonally.

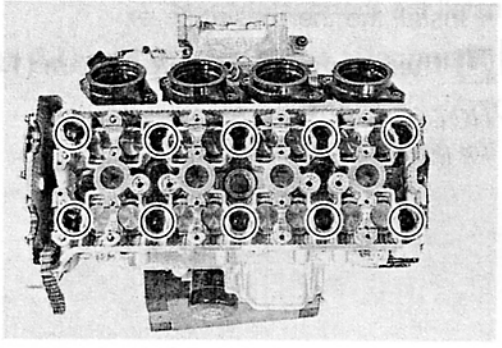

Cylinder head bolt (M10): Initial: 25 N·m
(2.5 kgf·m, 18.0 lb-ft)
Final: 51 N·m
(5.1 kgf·m, 37.6 lb-ft)

NOTE:

* *Install the washers to the cylinder head bolts (M10) as shown.*

* *Apply engine oil to the washers and thread portion of the bolts before installing the cylinder head bolts.*

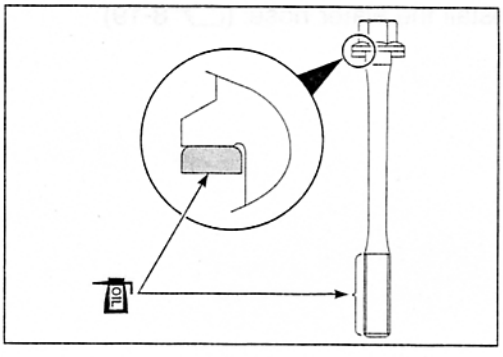

- Tighten the cylinder head bolts to the specified torque.

Cylinder head bolt (M6): 10 N·m (1.0 kgf·m, 7.0 lb-ft)

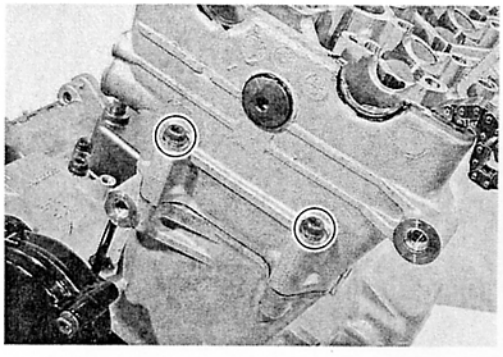

- Fit the gasket ① and tighten the water temp. gauge.

Water temp. gauge: 18 N·m (1.8 kgf·m, 13.0 lb-ft)

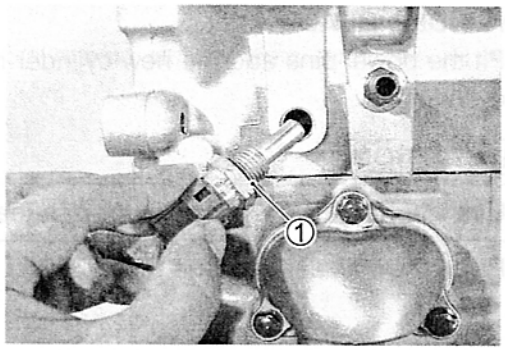

- Install the thermostat. (☞5-10)

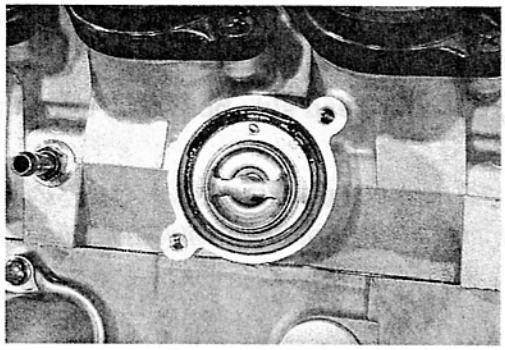

- Install the thermostat cover.

Thermostat cover bolt: 10 N·m (1.0 kgf·m, 7.0 lb-ft)

NOTE:
Fit the clamp to the bolt Ⓐ.

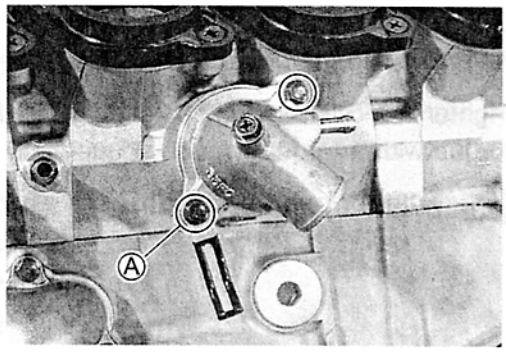

- Install the water hose. (☞8-19)

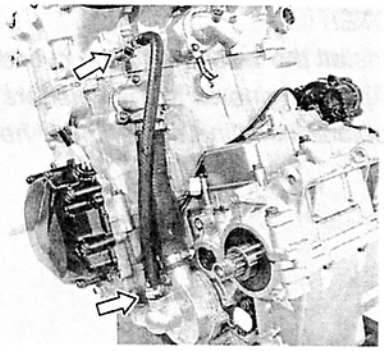

CAMSHAFT

- Turn the crankshaft clockwise with the box wrench and align the line Ⓐ on the starter clutch with the index mark Ⓑ of the valve timing inspection hole while keeping the cam chain pulled upward.

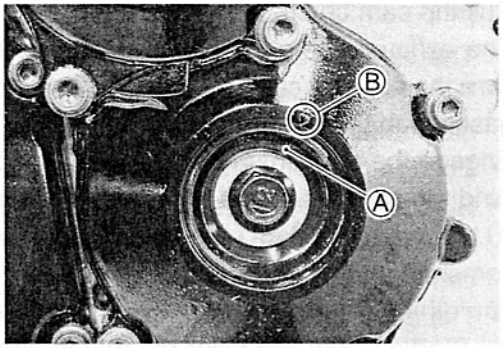

⚠ CAUTION

Pull the cam chain upward, or the chain will be caught between crankcase and cam drive sprocket.

⚠ CAUTION

To adjust the camshaft timing correctly, be sure to align the line Ⓐ with the index mark Ⓑ and hold this position when installing the camshafts.

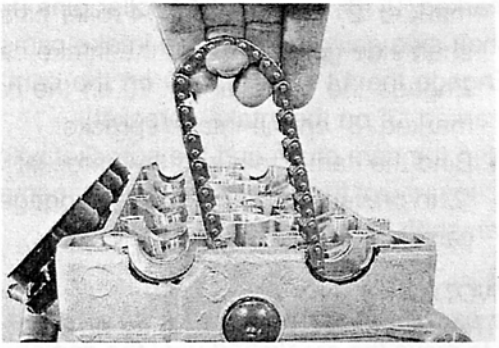

- The cam shafts are identified by the embossed letters.
- Before replacing the camshafts on cylinder head, apply molybdenum oil solution to their journals and cam faces.
- Apply engine oil to the camshaft journal holders.

MOLYBDENUM OIL SOLUTION

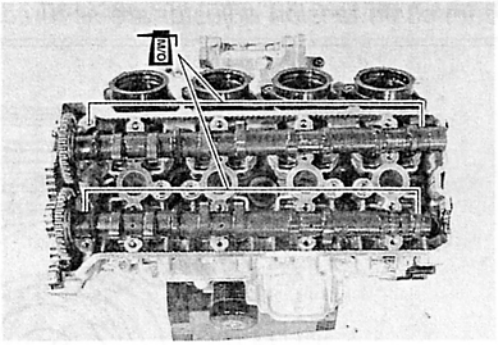

NOTE:
Before installing the camshaft, check that the tappets are installed correctly.

- Pull the cam chain lightly.
- The exhaust camshaft sprocket has an arrow marked "1" Ⓐ. Turn the exhaust camshaft so that the arrow is aligned with the gasket surface of the cylinder head.
- Engage the cam chain with the exhaust camshaft sprocket.
- Bind the cam chain and the sprocket with a proper wire clamp ① to prevent the cam chain disengagement while installing the camshaft journal holders.
- The other arrow marked "2" Ⓑ should now be pointing straight up. Starting from the roller pin that is directly above the arrow marked "2" Ⓑ, count out 14 roller pins (from the exhaust camshaft side going towards the intake camshaft side).
- Engage the 14 roller pin Ⓒ on the cam chain with the arrow marked "3" on the intake sprocket.
- Bind the cam chain and the sprocket with a proper wire clamp ② to prevent the cam chain disengagement while installing the camshaft journal holders.

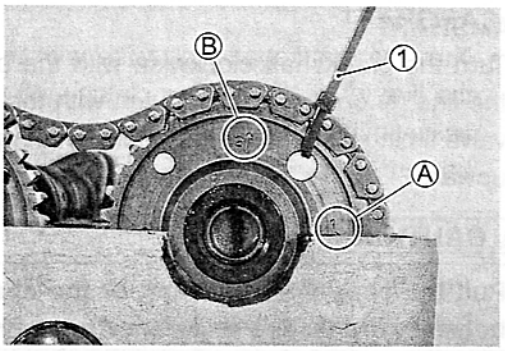

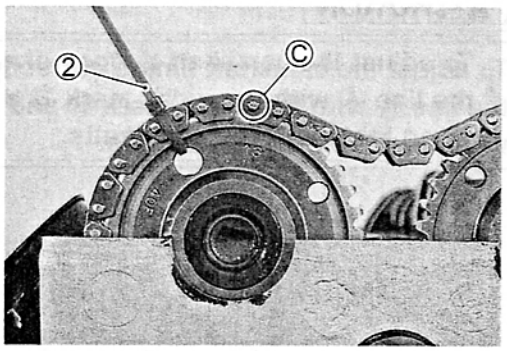

NOTE:
The cam chain should now be on all three sprockets. Be careful not to move the crankshaft until the camshaft journal holders and cam chain tension adjuster are secured.

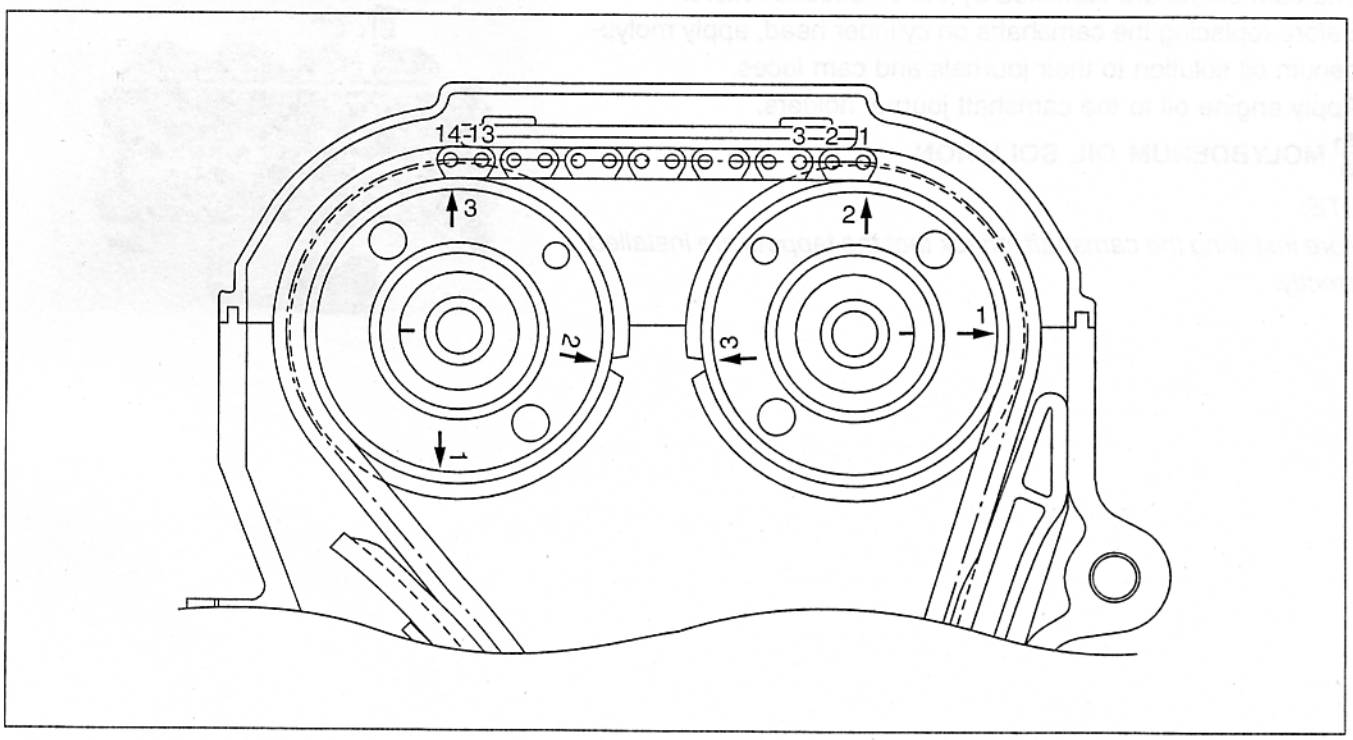

- Install the dowel pins.
- Install the camshaft journal holders, intake and exhaust and cam chain guide.
- Fasten the camshaft journal holders evenly by tightening the camshaft journal holder bolts sequentially and diagonally.

NOTE:

* *Damage to head or camshaft journal holder thrust surfaces may result if the camshaft journal holders are not drawn down evenly.*

* *Each camshaft journal holder is identified with a cast-on letters Ⓐ.*

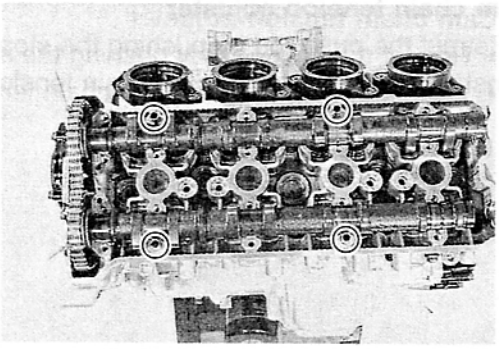

- Tighten the camshaft journal holder bolts in ascending order of numbers to the specified torque.

Camshaft journal holder bolt: 10 N·m (1.0 kgf·m, 7.0 lb-ft)

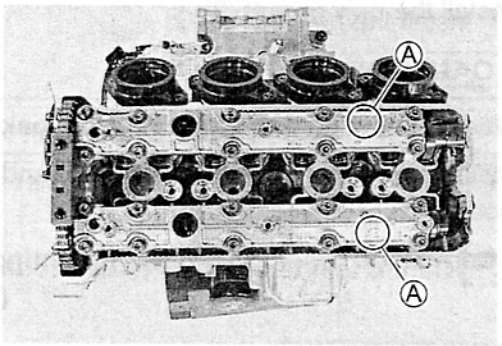

⚠ CAUTION

The camshaft journal holder bolts are made of a special material and much superior in strength, compared with other types of high strength bolts.
Take special care not to use other types of bolts.

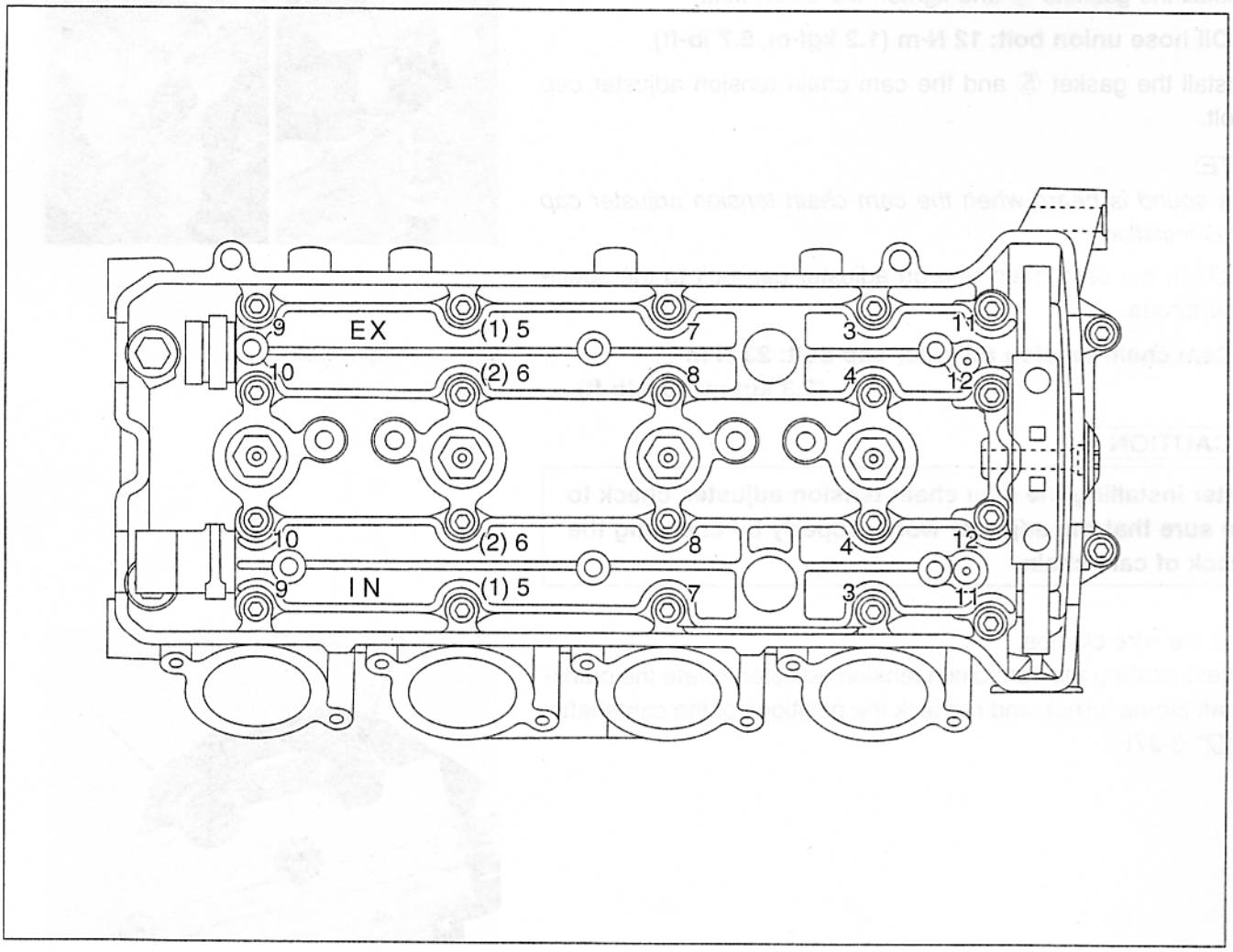

Cam chain tension adjuster

- Retract the push rod by pushing the stopper.
- Install the ball ① to the cam chain tension adjuster.

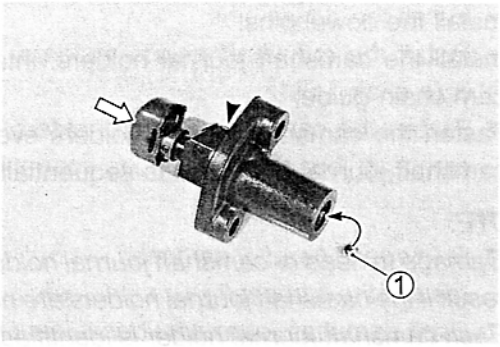

- Install the new gasket ②.

⚠ CAUTION

Use the new gasket to prevent oil leakage.

- Install the cam chain tension adjuster and tighten the mounting bolt.

Cam chain tension adjuster mounting bolt: 10 N·m (1.0 kgf·m, 7.0 lb-ft)

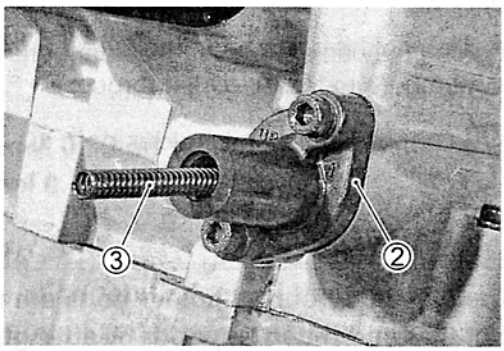

- Install the spring ③.
- Install the oil hose as shown in illustration. (☞Next page)
- Install the gaskets ④ and tighten the union bolt.

Oil hose union bolt: 12 N·m (1.2 kgf·m, 8.7 lb-ft)

- Install the gasket ⑤ and the cam chain tension adjuster cap bolt.

NOTE:
Click sound is heard when the cam chain tension adjuster cap bolt is installed.

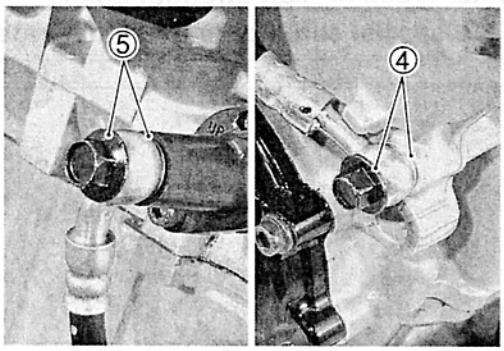

- Tighten the cam chain tension adjuster cap bolt to the specified torque.

Cam chain tension adjuster cap bolt: 23 N·m (2.3 kgf·m, 16.5 lb-ft)

⚠ CAUTION

After installing the cam chain tension adjuster, check to be sure that the adjuster work properly by checking the slack of cam chain.

- Cut the wire clamps.
- After installing the cam chain tension adjuster, rotate the crankshaft (some turns), and recheck the positions of the camshafts. (☞ 3-97)

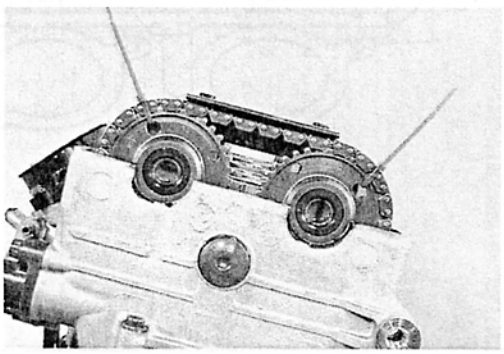

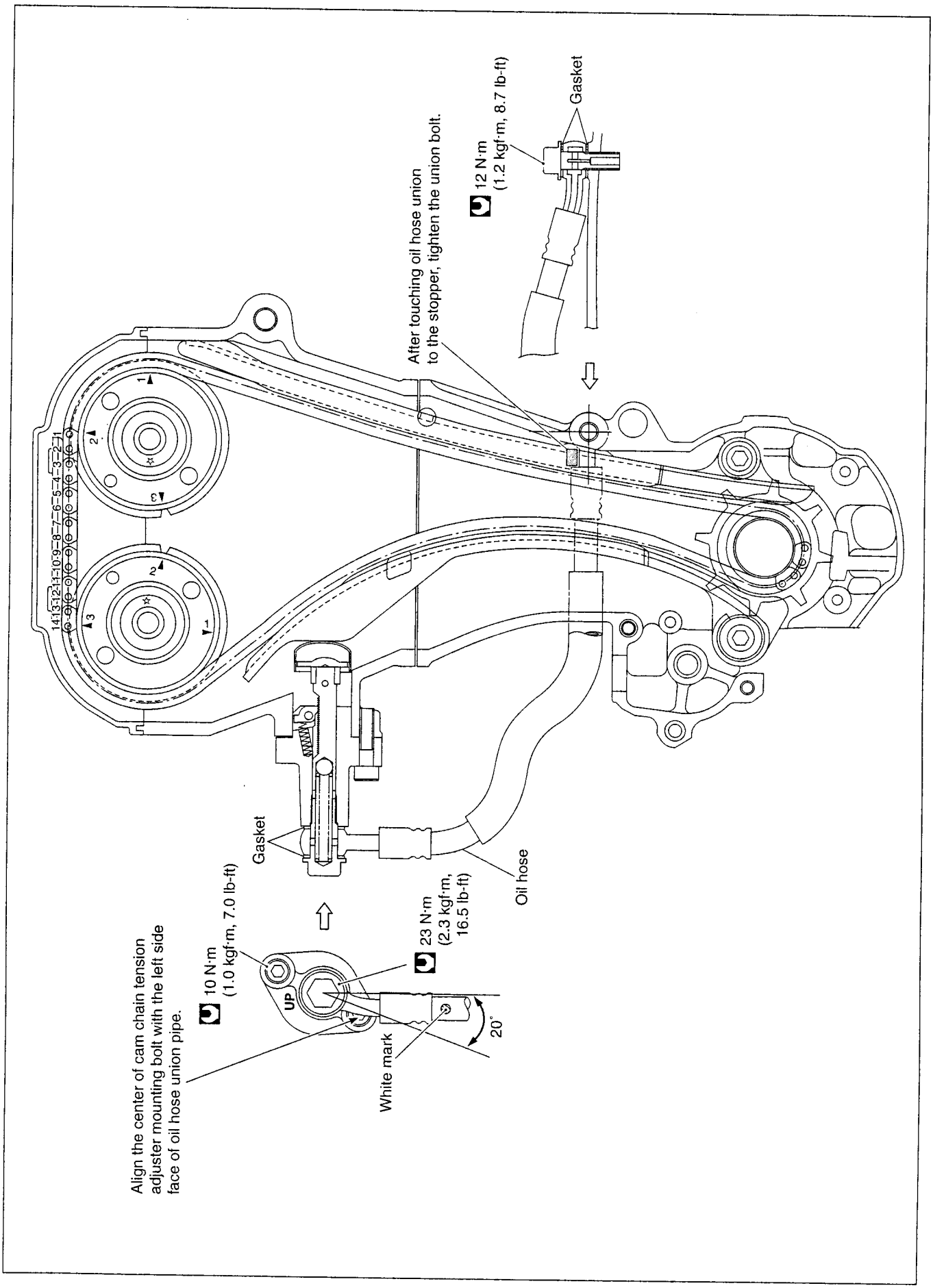
Gasket
12 N·m
(1.2 kgf·m, 8.7 lb-ft)
After touching oil hose union
to the stopper, tighten the union bolt.
Oil hose
Gasket
23 N·m
(2.3 kgf·m,
16.5 lb-ft)
10 N·m
(1.0 kgf·m, 7.0 lb-ft)
UP
20°
White mark
Align the center of cam chain tension
adjuster mounting bolt with the left side
face of oil hose union pipe.

- Tighten the valve timing inspection plug ① to the specified torque.

Valve timing inspection plug: 11 N·m (1.1 kgf·m, 8.0 lb-ft)

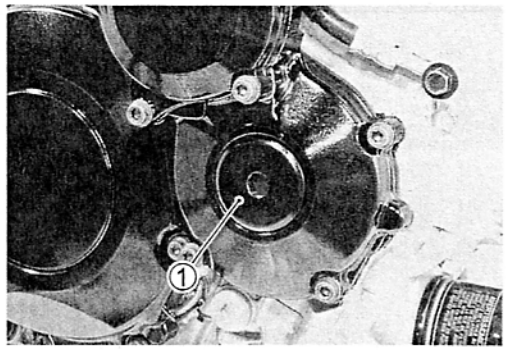

CYLINDER HEAD COVER

- Pour engine oil in each oil pocket in the cylinder head.

NOTE:
Be sure to check the valve clearance. (☞ 2-8)

- Install the dowel pins.
- Install the O-rings.

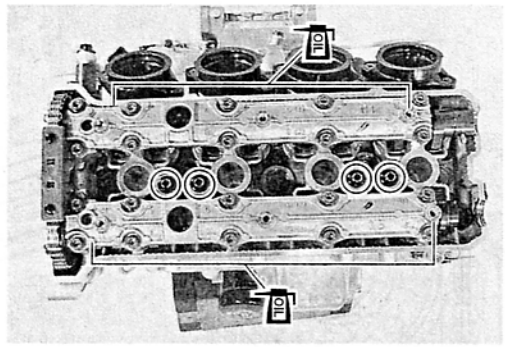

- Install the new gaskets to the cylinder head cover.
- Apply SUZUKI BOND "1207B" to the cam end caps of the gaskets as shown.

1207B **99104-31140: SUZUKI BOND "1207B" (For USA)**
99000-31140: SUZUKI BOND "1207B" (For the others)

⚠ CAUTION

Use the new gaskets to prevent oil leakage.

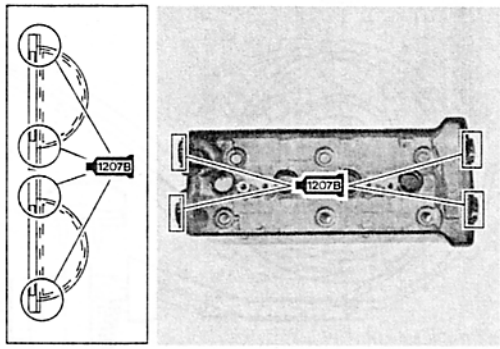

- Place the cylinder head cover on the cylinder head.
- Fit the new gaskets to each head cover bolt.

⚠ CAUTION

Use the new gaskets to prevent oil leakage.

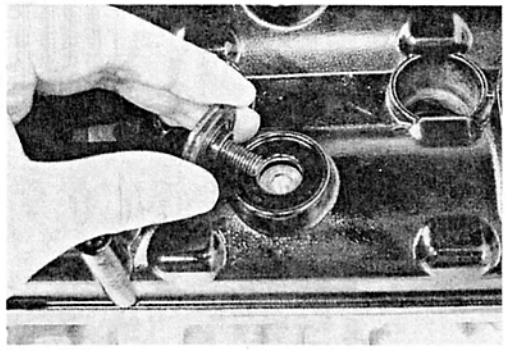

- Tighten the head cover bolts to the specified torque.

Head cover bolt: 14 N·m (1.4 kgf·m, 10.0 lb-ft)

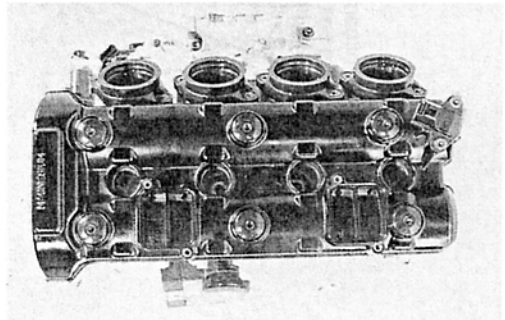

PAIR VALVE

- Install the PAIR reed valve ①.

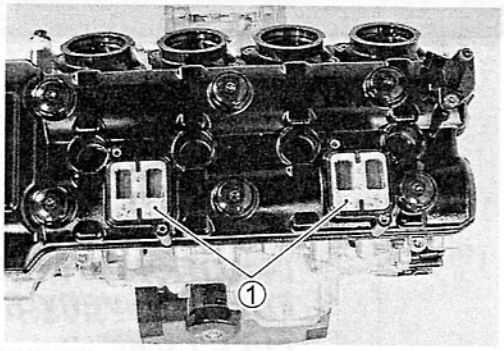

- Apply THREAD LOCK to the bolts, install the PAIR valve and hose. (☞8-22)

1342 99000-32050: THREAD LOCK "1342"

PAIR reed valve cover bolt: 10 N·m (1.0 kgf·m, 7.0 lb-ft)

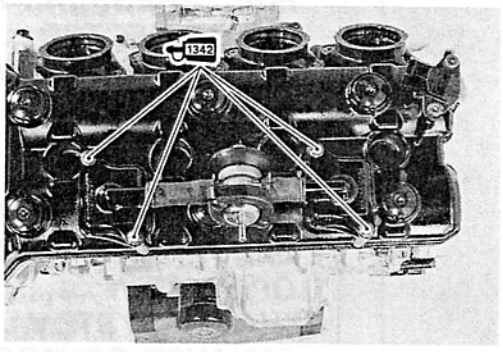

STARTER MOTOR

- Apply the grease to the O-ring.

A 99000-25030: SUZUKI SUPER GREASE "A" (For USA)
99000-25010: SUZUKI SUPER GREASE "A" (For the others)

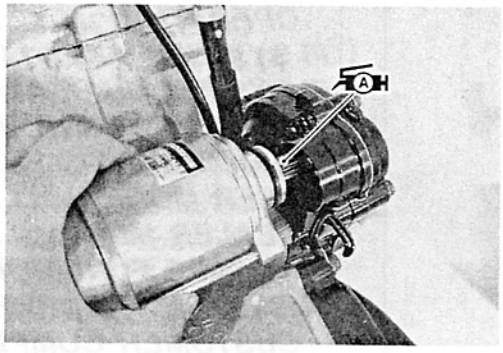

- Install the starter motor.

Starter motor mounting bolt: 10 N·m (1.0 kgf·m, 7 lb-ft)

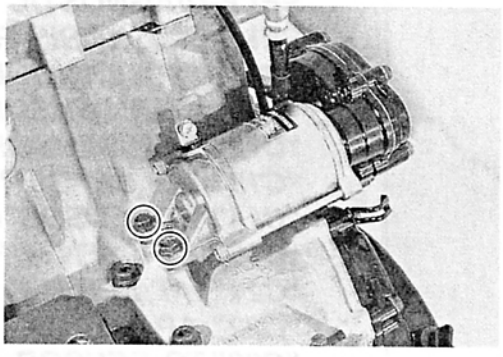

- Install the spark plugs. (☞2-4)

FI SYSTEM / INTAKE AIR SYSTEM / EXHAUST SYSTEM

CONTENTS

PRECAUTIONS IN SERVICING 4- 2
FI SYSTEM TECHNICAL FEATURES 4- 8
INJECTION TIME 4- 8
COMPENSATION OF INJECTION TIME 4- 9
INJECTION STOP CONTROL 4- 9
FUEL DELIVERY SYSTEM 4-10
FUEL PUMP 4-11
FUEL PRESSURE REGULATOR 4-12
FUEL INJECTOR 4-12
FUEL PUMP CONTROL SYSTEM 4-13
ECM (FI CONTROL UNIT) 4-14
INJECTION TIMING 4-15
SENSORS 4-16
INTAKE AIR SYSTEM 4-20
SECONDARY THROTTLE CONTROL SYSTEM 4-20
OPERATION 4-21
EXHAUST SYSTEM 4-22
EXHAUST CONTROL SYSTEM 4-22
OPERATION 4-23
FI SYSTEM PARTS LOCATION 4-24
FI SYSTEM DIAGRAM 4-26
FI SYSTEM WIRING DIAGRAM 4-27
SELF-DIAGNOSIS FUNCTION 4-28
USER MODE 4-28
DEALER MODE 4-29
FAIL-SAFE FUNCTION 4-31
FI SYSTEM TROUBLESHOOTING 4-32
CUSTOMER COMPLAINT ANALYSIS 4-32
SELF-DIAGNOSTIC PROCEDURES 4-33
SELF-DIAGNOSIS RESET PROCEDURE 4-33
MALFUNCTION CODE AND DEFECTIVE CONDITION 4-34
"C11" CMP SENSOR CIRCUIT MALFUNCTION 4-36
"C12" CKP SENSOR CIRCUIT MALFUNCTION 4-37
"C13" IAP SENSOR CIRCUIT MALFUNCTION 4-38
"C14" TP SENSOR CIRCUIT MALFUNCTION 4-40
"C15" ECT SENSOR CIRCUIT MALFUNCTION 4-42
"C21" IAT SENSOR CIRCUIT MALFUNCTION 4-43
"C22" AP SENSOR CIRCUIT MALFUNCTION 4-44
"C23" TO SENSOR CIRCUIT MALFUNCTION 4-46
"C24", "C25", "C26" or "C27" IGNITION SYSTEM MALFUNCTION 4-47
"C28" STV ACTUATOR CIRCUIT MALFUNCTION 4-47
"C29" STP SENSOR CIRCUIT MALFUNCTION 4-48
"C31" GEAR POSITION SWITCH CIRCUIT MALFUNCTION 4-50
"C32", "C33", "C34" or "C35" FUEL INJECTION MALFUNCTION 4-51
"C41" FP RELAY CIRCUIT MALFUNCTION 4-52
"C42" IG SWITCH CIRCUIT MALFUNCTION 4-52
"C46" EXCV ACTUATOR CIRCUIT MALFUNCTION 4-53

FUEL SYSTEM 4-56
FUEL TANK LIFT-UP 4-56
FUEL TANK REMOVAL 4-56
FUEL TANK INSTALLATION 4-56
FUEL PRESSURE INSPECTION 4-57
FUEL PUMP INSPECTION 4-58
FUEL PUMP RELAY INSPECTION 4-60
FUEL PUMP AND FUEL FILTER REMOVAL 4-60
FUEL MESH FILTER INSPECTION AND CLEANING 4-62
FUEL PUMP AND FUEL MESH FILTER INSTALLATION 4-62
THROTTLE BODY 4-65
CONSTRUCTION 4-65
AIR CLEANER BOX AND THROTTLE BODY REMOVAL 4-66
THROTTLE BODY DISASSEMBLY 4-68
THROTTLE BODY CLEANING 4-69
INSPECTION 4-69
THROTTLE BODY REASSEMBLY 4-70
THROTTLE BODY INSTALLATION 4-72
STP SENSOR ADJUSTMENT 4-73
FUEL INJECTOR INSPECTION 4-74
FUEL INJECTOR REMOVAL 4-74
FUEL INJECTOR INSTALLATION 4-74
FAST IDLE ADJUSTMENT 4-74
THROTTLE VALVE SYNCHRONIZATION 4-75
THROTTLE POSITION SENSOR (TPS) SETTING 4-78
THROTTLE CABLE ADJUSTMENT 4-78
EXCV ACTUATOR AND EXC VALVE 4-79
EXCVA REMOVAL 4-79
EXCVA INSTALLATION 4-79
EXCVA INSPECTION 4-80
EXCV CABLE REPLACEMENT 4-81
EXCVA ADJUSTMENT 4-83
EXCV REMOVAL 4-86
EXCV INSPECTION 4-86
EXCV INSTALLATION 4-87
SENSORS 4-89
IAP SENSOR INSPECTION 4-89
IAP SENSOR REMOVAL/INSTALLATION 4-89
TP SENSOR INSPECTION 4-89
TP SENSOR REMOVAL/INSTALLATION 4-89
CKP SENSOR INSPECTION 4-89
CKP SENSOR REMOVAL/INSTALLATION 4-89
CMP SENSOR INSPECTION 4-89
CMP SENSOR REMOVAL/INSTALLATION 4-89
IAT SENSOR INSPECTION 4-89
IAT SENSOR REMOVAL/INSTALLATION 4-89
ECT SENSOR INSPECTION 4-90
ECT SENSOR REMOVAL/INSTALLATION 4-90
AP SENSOR INSPECTION 4-90
AP SENSOR REMOVAL/INSTALLATION 4-90
TO SENSOR INSPECTION 4-90
TO SENSOR REMOVAL/INSTALLATION 4-90
STP SENSOR INSPECTION 4-90
STP SENSOR REMOVAL/INSTALLATION 4-90
EXCVA POSITION SENSOR INSPECTION 4-90
EXCVA REMOVAL / INSTALLATION 4-90

PRECAUTIONS IN SERVICING

When handling the FI component parts or servicing the FI system, observe the following points for the safety of the system.

CONNECTOR/COUPLER

- When connecting a connector, be sure to push it in until a click is felt.
- With a lock type coupler, be sure to release the lock when disconnecting, and push it in fully till the lock works when connecting it.
- When disconnecting the coupler, be sure to hold the coupler body and do not pull the lead wires.
- Inspect each terminal on the connector/coupler for looseness or bending.
- Inspect each terminal for corrosion and contamination.
  The terminals must be clean and free of any foreign material which could impede proper terminal contact.

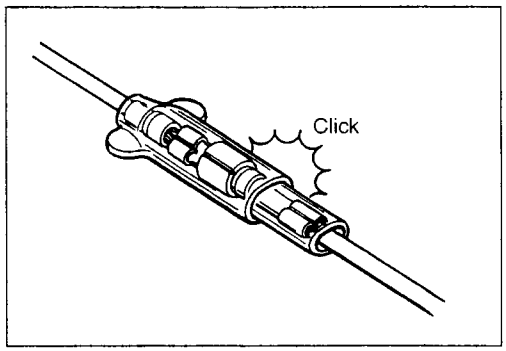

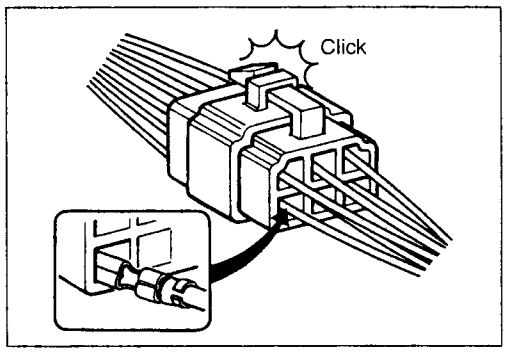

- Inspect each lead wire circuit for poor connection by shaking it by hand lightly. If any abnormal condition is found, repair or replace.

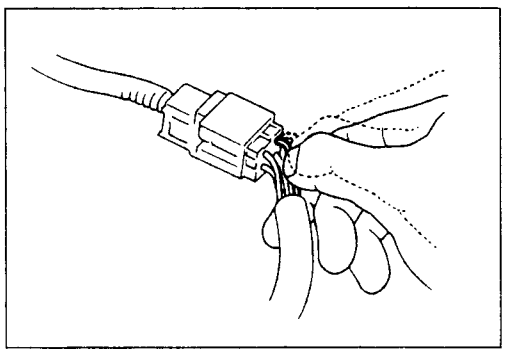

- When taking measurements at electrical connectors using a tester probe, be sure to insert the probe from the wire harness side (backside) of the connector/coupler.

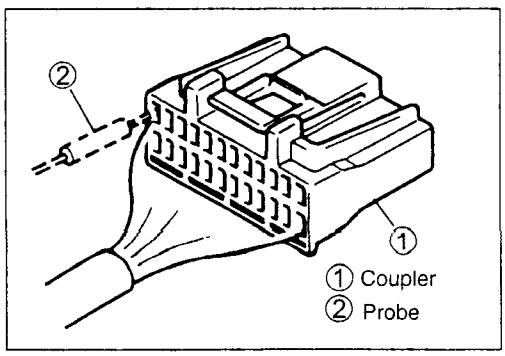

- When connecting meter probe from the terminal side of the coupler (connection from harness side not being possible), use extra care not to force and cause the male terminal to bend or the female terminal to open.
  Connect the probe as shown to avoid opening of female terminal.
  Never push in the probe where male terminal is supposed to fit.
- Check the male connector for bend and female connector for excessive opening. Also check the coupler for locking (looseness), corrosion, dust, etc.

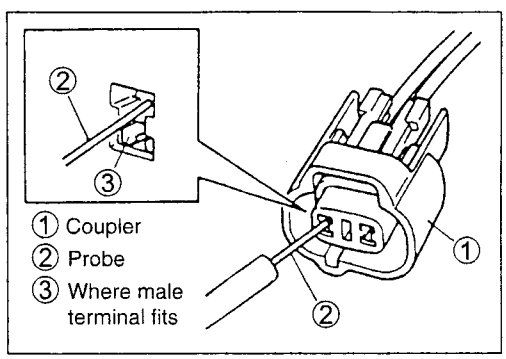

FUSE

- When a fuse blows, always investigate the cause, correct it and then replace the fuse.
- Do not use a fuse of a different capacity.
- Do not use wire or any other substitute for the fuse.

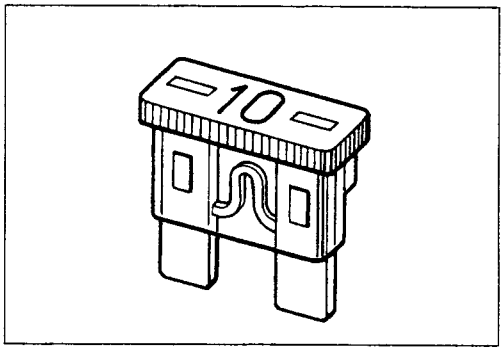

ECM/VARIOUS SENSORS

- Since each component is a high-precision part, great care should be taken not to apply any sharp impacts during removal and installation.

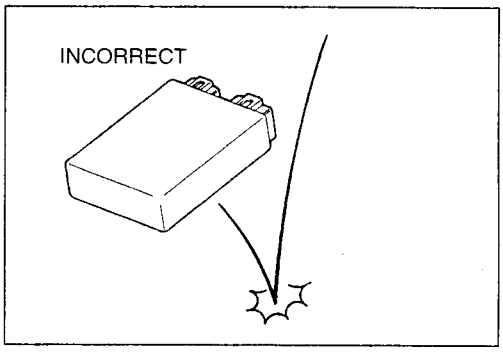

- Be careful not to touch the electrical terminals of the ECM. The static electricity from your body may damage this part.

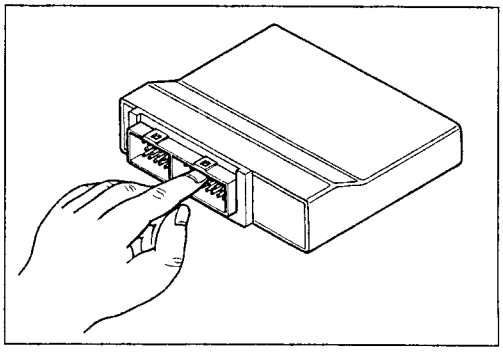

- When disconnecting and connecting the ECM couplers, make sure to turn OFF the ignition switch, or electronic parts may get damaged.

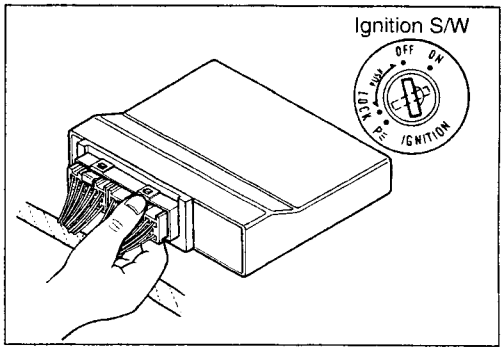

- Battery connection in reverse polarity is strictly prohibited. Such a wrong connection will damage the components of the FI system instantly when reverse power is applied.

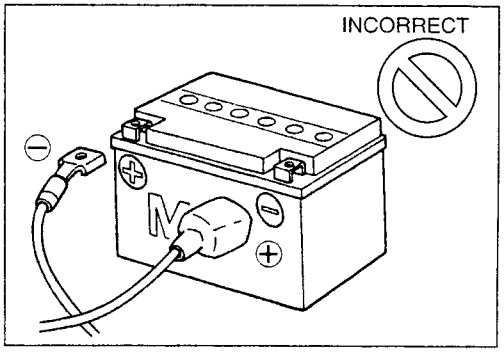

- Removing any battery terminal of a running engine is strictly prohibited.
  The moment such removal is made, damaging counter electromotive force will be applied to the ECM which may result in serious damage.

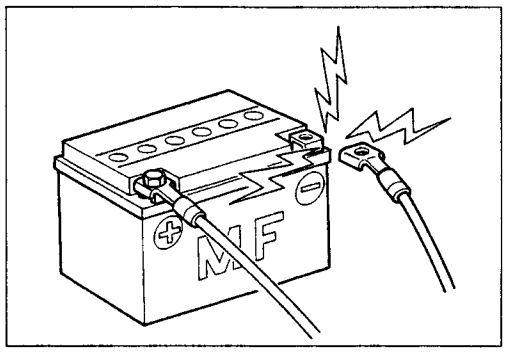

- Before measuring voltage at each terminal, check to make sure that battery voltage is 11V or higher. Terminal voltage check at low battery voltage will lead to erroneous diagnosis.

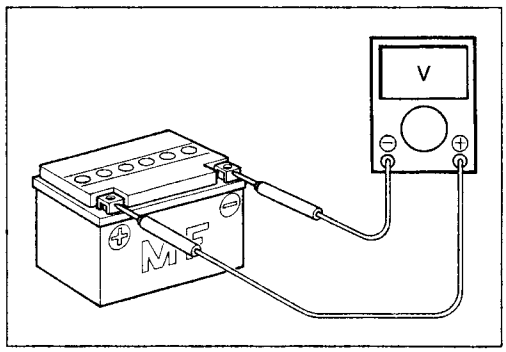

- Never connect any tester (voltmeter, ohmmeter, or whatever) to the ECM when its coupler is disconnected. Otherwise, damage to ECM may result.
- Never connect an ohmmeter to the ECM with its coupler connected. If attempted, damage to ECM or sensors may result.
- Be sure to use a specified voltmeter/ohmmeter. Otherwise, accurate measurements may not be obtained and personal injury may result.

ELECTRICAL CIRCUIT INSPECTION PROCEDURE

While there are various methods for electrical circuit inspection, described here is a general method to check for open and short circuit using an ohmmeter and a voltmeter.

OPEN CIRCUIT CHECK

Possible causes for the open circuit are as follows. As the cause can exist in the connector/coupler or terminal, they need to be checked carefully.

- Loose connection of connector/coupler
- Poor contact of terminal (due to dirt, corrosion or rust, poor contact tension, entry of foreign object etc.)
- Wire harness being open
- Poor terminal-to-wire connection

- Disconnect the negative cable from the battery.
- Check each connector/coupler at both ends of the circuit being checked for loose connection. Also check for condition of the coupler lock if equipped.

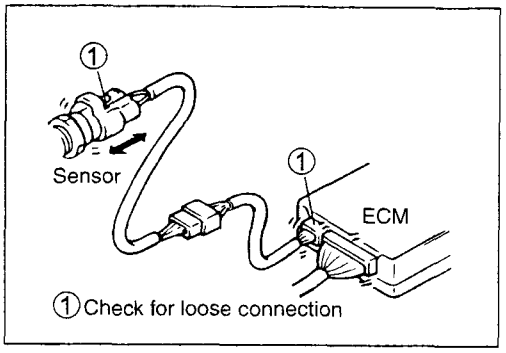

- Using a test male terminal, check the female terminals of the circuit being checked for contact tension.
  Check each terminal visually for poor contact (possibly caused by dirt, corrosion, rust, entry of foreign object, etc.). At the same time, check to make sure that each terminal is fully inserted in the coupler and locked.
  If contact tension is not enough, rectify the contact to increase tension or replace.
  The terminals must be clean and free of any foreign material which could impede proper terminal contact.
- Using continuity inspect or voltage check procedure as described below, inspect the wire harness terminals for open circuit and poor connection. Locate abnormality, if any.

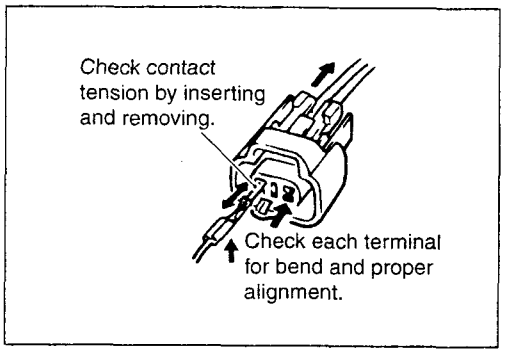

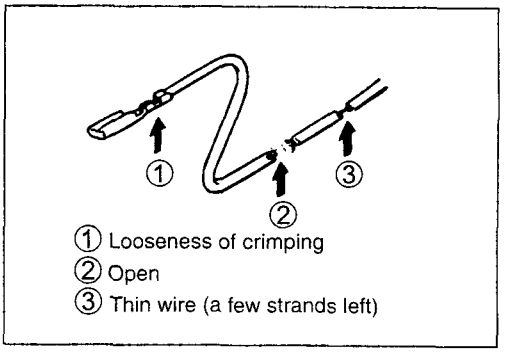

Continuity check

- Measure resistance across coupler Ⓑ (between Ⓐ and Ⓒ in the figure).
  If no continuity is indicated (infinity or over limit), the circuit is open between terminals Ⓐ and Ⓒ.

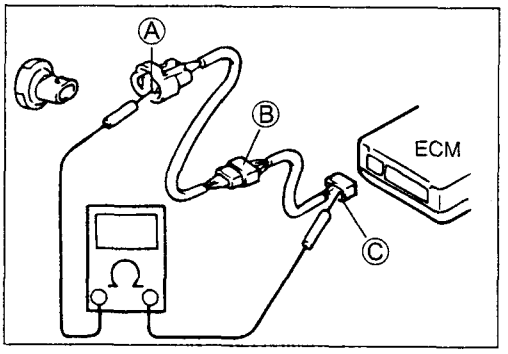

- Disconnect the coupler Ⓑ and measure resistance between couplers Ⓐ and Ⓑ.
  If no continuity is indicated, the circuit is open between couplers Ⓐ and Ⓑ. If continuity is indicated, there is an open circuit between couplers Ⓑ' and Ⓒ or an abnormality in coupler Ⓑ' or coupler Ⓒ.

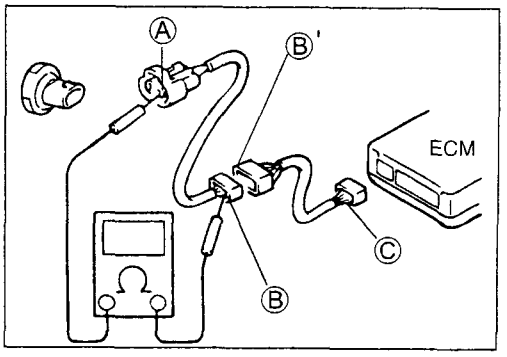

VOLTAGE CHECK

If voltage is supplied to the circuit being checked, voltage check can be used as circuit check.

- With all connectors/couplers connected and voltage applied to the circuit being checked, measure voltage between each terminal and body ground.

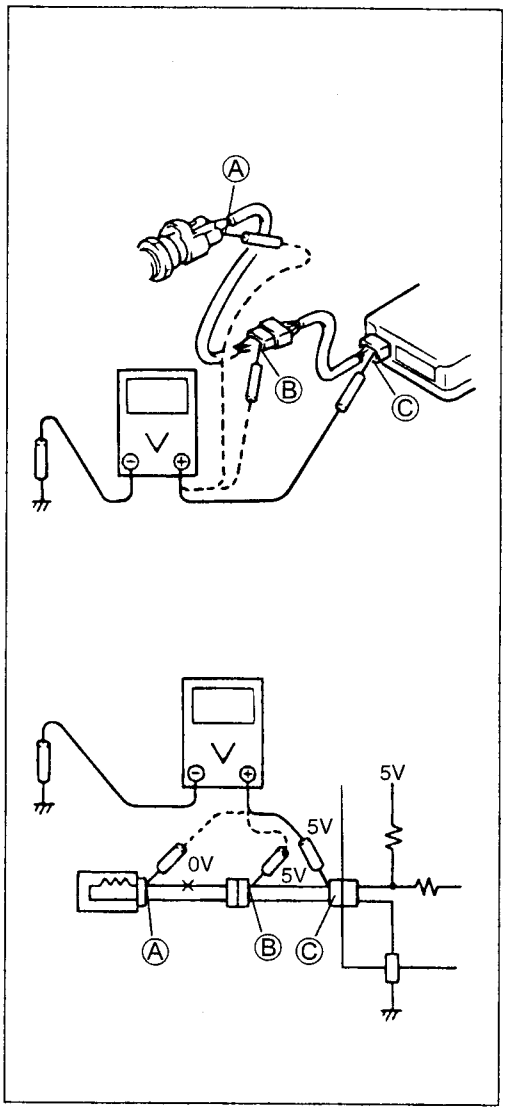

If measurements were taken as shown in the figure at the right and results are as listed below, it means that the circuit is open between terminals Ⓐ and Ⓑ.

Voltage Between:

Ⓒ and body ground: Approx. 5V
Ⓑ and body ground: Approx. 5V
Ⓐ and body ground: 0V

Also, if measured values are as listed below, a resistance (abnormality) exists which causes the voltage drop in the circuit between terminals Ⓐ and Ⓑ.

Voltage Between:

Ⓒ and body ground: Approx. 5V
Ⓑ and body ground: Approx. 5V
Ⓐ and body ground: Approx. 3V — 2V voltage drop

SHORT CIRCUIT CHECK (WIRE HARNESS TO GROUND)

- Disconnect the negative cable from the battery.
- Disconnect the connectors/couplers at both ends of the circuit to be checked.

NOTE:

If the circuit to be checked branches to other parts as shown, disconnect all connectors/couplers of those parts. Otherwise, diagnosis will be misled.

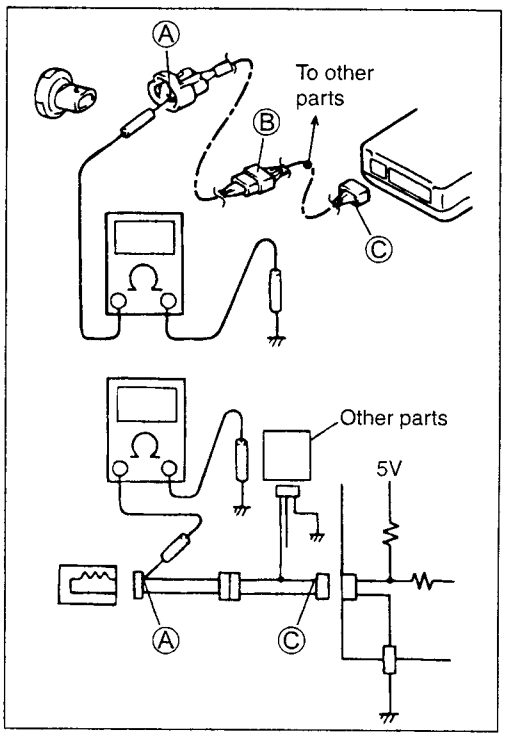

- Measure resistance between terminal at one end of circuit (Ⓐ terminal in figure) and body ground. If continuity is indicated, there is a short circuit to ground between terminals Ⓐ and Ⓒ.

- Disconnect the connector/coupler included in circuit (coupler Ⓑ) and measure resistance between terminal Ⓐ and body ground.
  If continuity is indicated, the circuit is shorted to the ground between terminals Ⓐ and Ⓑ.

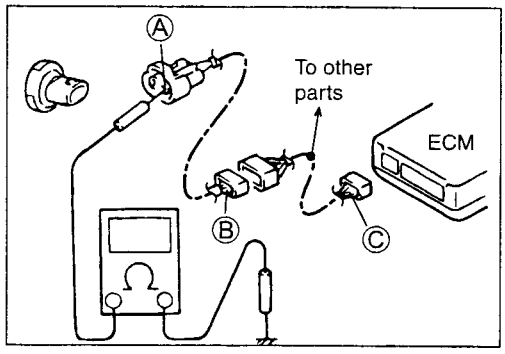

USING TESTERS

- Use the Suzuki multi-circuit tester (09900-25008).
- Use well-charged batteries in the tester.
- Be sure to set the tester to the correct testing range.

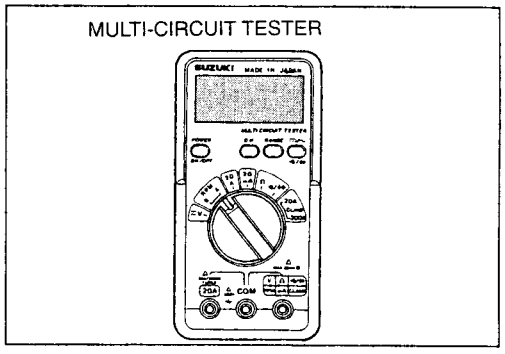

Using the tester

- Incorrectly connecting the ⊕ and ⊖ probes may cause the inside of the tester to burnout.
- If the voltage and current are not known, make measurements using the highest range.
- Reset the pocket tester to 0Ω before measuring each resistance or after changing the resistance range.
- When measuring the resistance with the multi-circuit tester, also measure the resistance with no-load. Sub-tract that resistance from the resistance measured under load in order to get the true resistance.

(Measured resistance) − (No-load resistance) = (True resistance)

- When measuring the resistance with the multi-circuit tester, ∞ will be shown as 10.00MΩ and "1" flashes in the display.
- Check that no voltage is applied before making the measurement. If voltage is applied, the tester may be damaged.
- After using the tester, turn the power off.

TOOL 09900-25008: Multi-circuit tester

NOTE:

* *When connecting the multi circuit tester, install fine copper wires (O.D is below 0.5 mm) to the back side of the lead wire coupler and connect the probes of tester to them.*

* *Use a fine copper wire, the outer diameter being below 0.5 mm, to prevent the rubber of the water proof coupler from damage.*

FI SYSTEM TECHNICAL FEATURES

INJECTION TIME (INJECTION VOLUME)

The factors to determine the injection time include the basic fuel injection time which is calculated on the basis of the intake air pressure, engine speed and throttle opening angle, and various compensations which are determined according to the signals from various sensors that detect the engine and driving conditions.

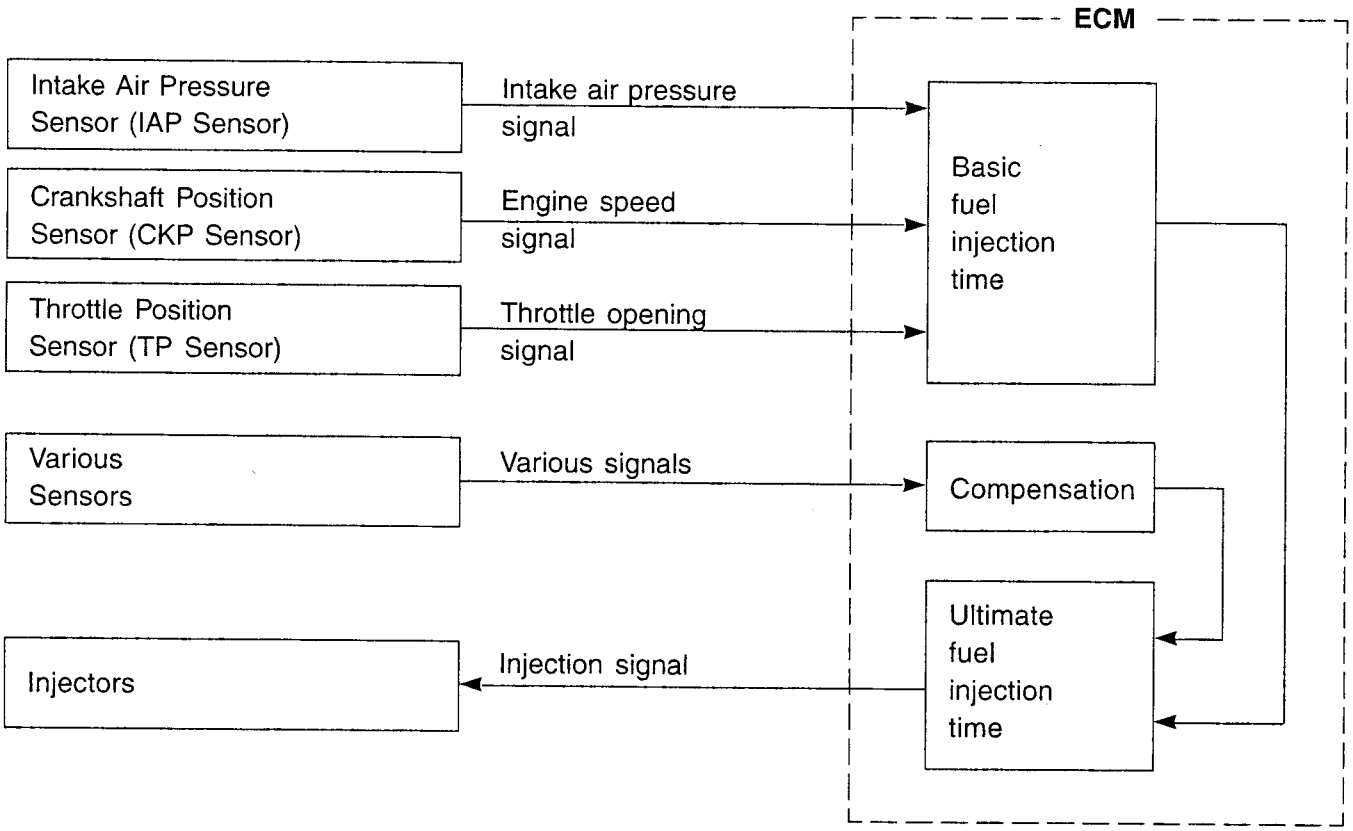

COMPENSATION OF INJECTION TIME (VOLUME)

The following different signals are output from the respective sensors for compensation of the fuel injection time (volume).

SIGNAL	DESCRIPTION
ATMOSPHERIC PRESSURE SENSOR SIGNAL	When atmospheric pressure is low, the sensor sends the signal to the ECM and reduce the injection time (volume).
ENGINE COOLANT TEMPERATURE SENSOR SIGNAL	When engine coolant temperature is low, injection time (volume) is increased.
INTAKE AIR TEMPERATURE SENSOR SIGNAL	When intake air temperature is low, injection time (volume) is increased.
BATTERY VOLTAGE SIGNAL	ECM operates on the battery voltage and at the same time, it monitors the voltage signal for compensation of the fuel injection time (volume). A longer injection time is needed to adjust injection volume in the case of low voltage.
ENGINE RPM SIGNAL	At high speed, the injection time (volume) is increased. This is the compensation of the SRAD.
STARTING SIGNAL	When starting engine, additional fuel is injected during cranking engine.
ACCELERATION SIGNAL/ DECELERATION SIGNAL	During acceleration, the fuel injection time (volume) is increased, in accordance with the throttle opening speed and engine rpm. During deceleration, the fuel injection time (volume) is decreased.

INJECTION STOP CONTROL

SIGNAL	DESCRIPTION
TIP OVER SENSOR SIGNAL (FUEL SHUT-OFF)	When the motorcycle tips over, the tip over sensor sends a signal to the ECM. Then, this signal cuts OFF current supplied to the fuel pump, fuel injectors and ignition coils.
OVER-REV. LIMITER SIGNAL	The fuel injectors stop operation when engine rpm reaches rev. limit rpm.

FUEL DELIVERY SYSTEM

The fuel delivery system consists of the fuel tank, fuel pump, fuel filters, fuel feed hose, fuel delivery pipe (including fuel injectors) and fuel pressure regulator. There is no fuel return hose. The fuel in the fuel tank is pumped up by the fuel pump and pressurized fuel to flow into the injector installed in the fuel delivery pipe. Fuel pressure is regulated by the fuel pressure regulator. As the fuel pressure applied to the fuel injector (the fuel pressure in the fuel delivery pipe) is always kept absolute fuel pressure of 3.0 kgf/cm^2 (300 kPa, 43 psi), the fuel is injected into the throttle body in conic dispersion when the injector opens according to the injection signal from the ECM.

The fuel relieved by the fuel pressure regulator flows out to the fuel tank.

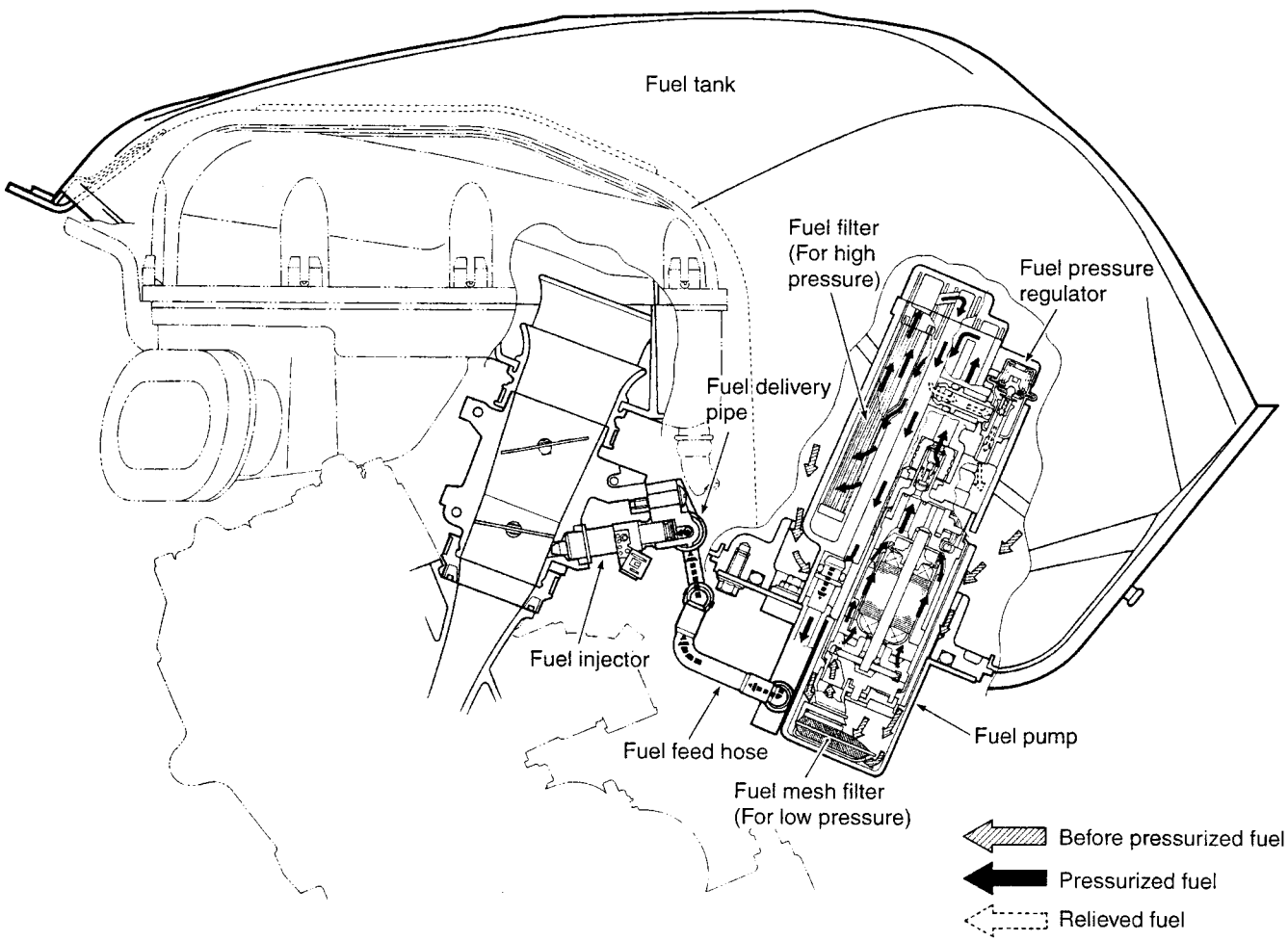

FUEL PUMP

The electric fuel pump is mounted at the bottom of the fuel tank, which consists of the armature, magnet, impeller, brush, check valve and relief valve. The ECM controls its ON/OFF operation as controlled under the FUEL PUMP CONTROL SYSTEM.

When electrical energy is supplied to the fuel pump, the motor in the pump runs and so does the impeller. This causes a pressure difference to occur between both sides of the impeller as there are many grooves around it. Then the fuel is drawn through the inlet port, and with its pressure increased, it is discharged through the outlet port. The fuel pump has a check valve to keep some pressure in the fuel feed hose even when the fuel pump is stopped. Also, the relief valve is equipped in the fuel pump, which releases pressurized fuel to the fuel tank when the outlet of the fuel pressure has increased up to 4.5 – 6.0 kgf/cm² (450 – 600 kPa, 64 – 85 psi).

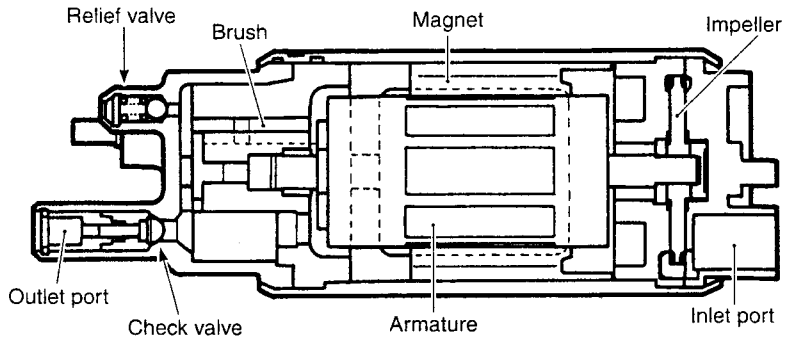

When the impeller is driven by the motor, pressure differential occurs between the front part and the rear part of the blade groove as viewed in angular direction due to fluid friction. This process continuously takes place causing fuel pressure to be built up. The pressurized fuel is then let out from the pump chamber and discharged through the motor section and the check valve.

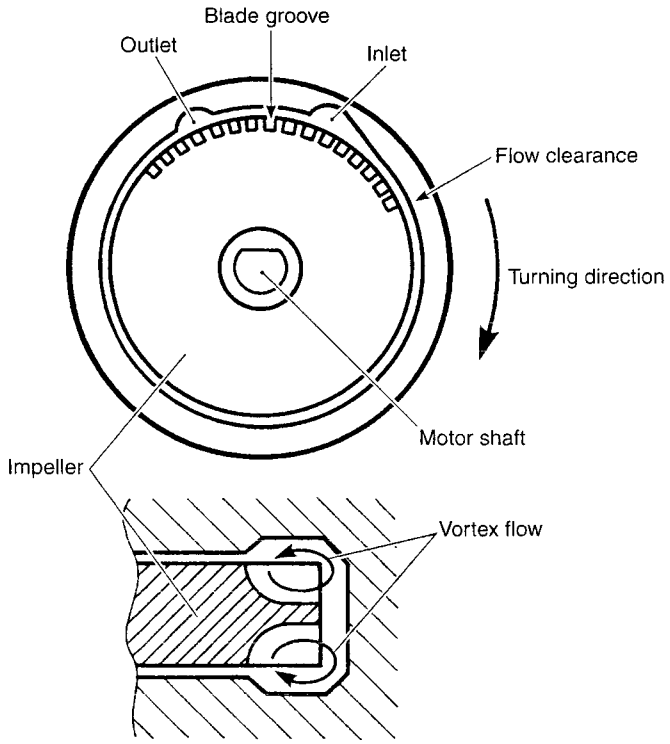

FUEL PRESSURE REGULATOR

The fuel pressure regulator consists of the spring and valve. It keeps absolute fuel pressure of 3.0 kgf/cm² (300 kPa, 43 psi) applied to the injector at all times.

When the fuel pressure rises more than 3.0 kgf/cm² (300 kPa, 43 psi), the fuel pushes the valve in the regulator open and excess fuel returns to the fuel tank.

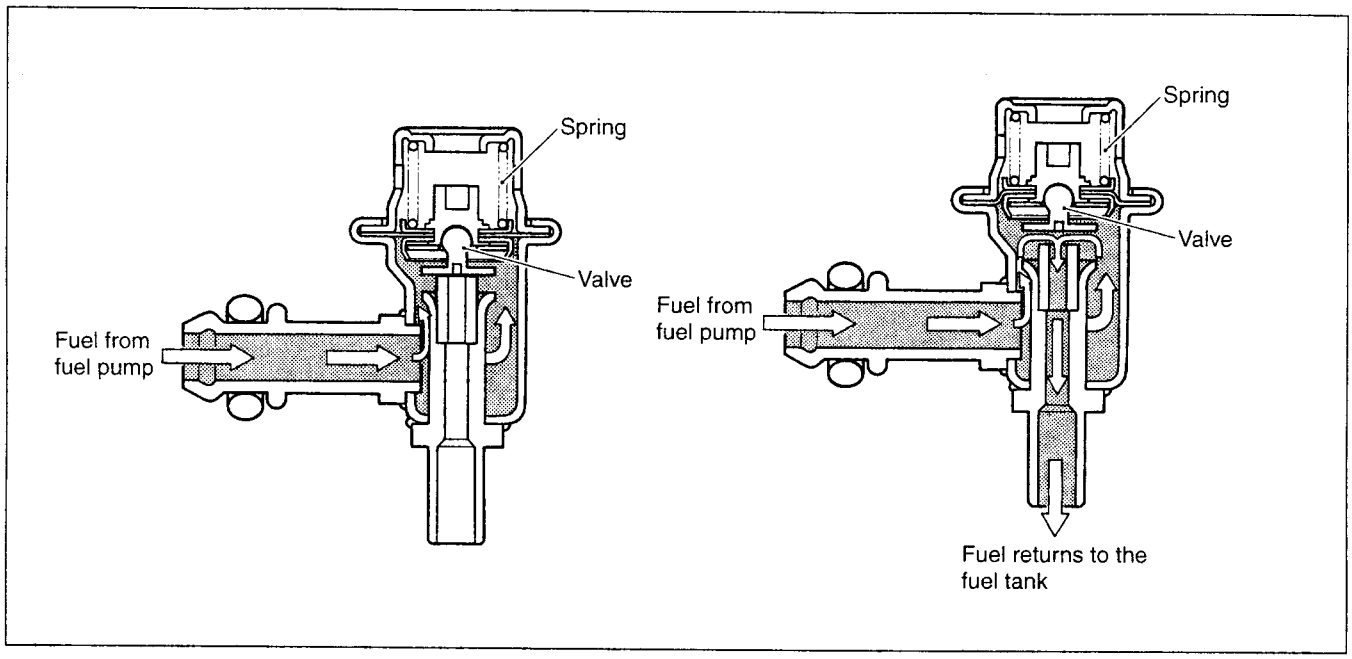

FUEL INJECTOR

The fuel injector consists of the solenoid coil, plunger, needle valve and filter.

It is an electromagnetic type injection nozzle which injects fuel in the throttle body according to the signal from the ECM.

When the solenoid coil of the injector is energized by the ECM, it becomes an electromagnet and attracts the plunger. At the same time, the needle valve incorporated with the plunger opens and the injector which is under the fuel pressure injects fuel in conic dispersion. As the lift stroke of the needle valve of the injector is set constant, the volume of the fuel injected at one time is determined by the length of time during which the solenoid coil is energized (injection time).

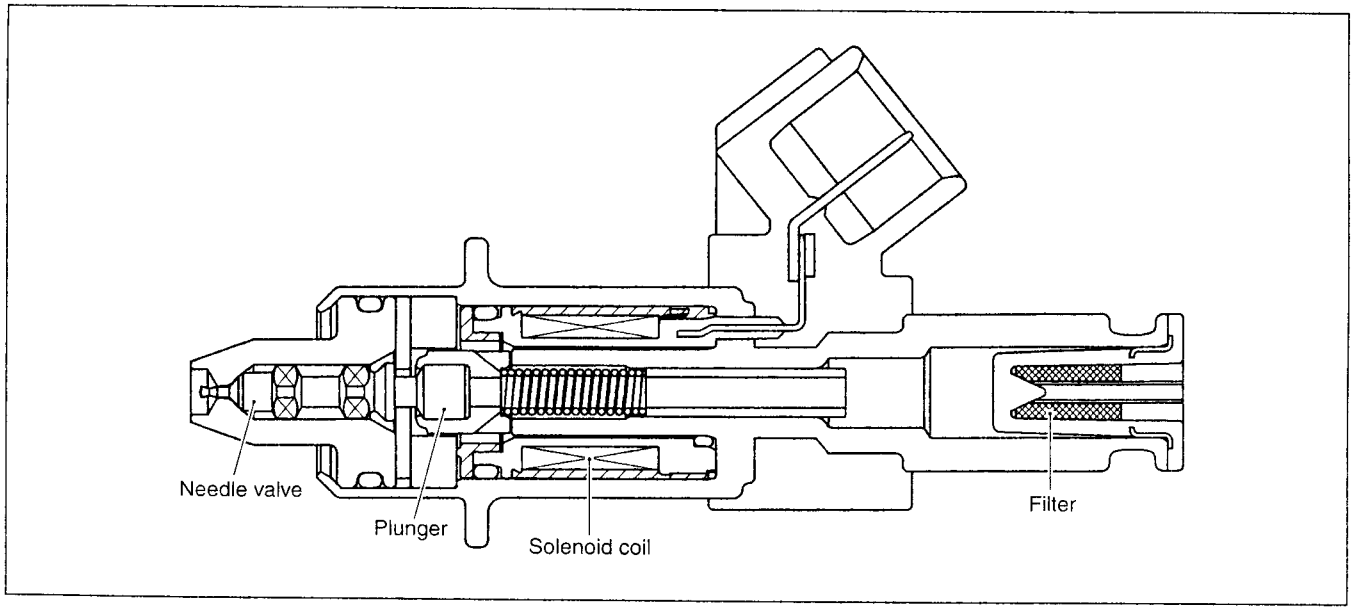

FUEL PUMP CONTROL SYSTEM

When the ignition switch is turned on, current from the battery flows to the fuel pump motor through the side-stand relay and the fuel pump relay causing the motor to turn.

Since the ECM has a timer function, the fuel pump motor stops turning in three seconds after the switch has been turned on.

Thereafter, when the crankshaft is turned by the starter motor or the engine has been started, the engine revolving signal is input to the ECM. Then, current flows to the fuel pump motor from the battery through the side-stand relay and the fuel pump relay so that the pump continues to function.

A tip over sensor is provided in the fuel pump control circuit. By this provision, anytime the motorcycle tips over, the tip over sensor sends a signal to the ECM to turn off power to the fuel pump relay, causing the fuel pump motor to stop. At the same time, current to the fuel injectors as well as the ignition coil is interrupted, which then stops the engine.

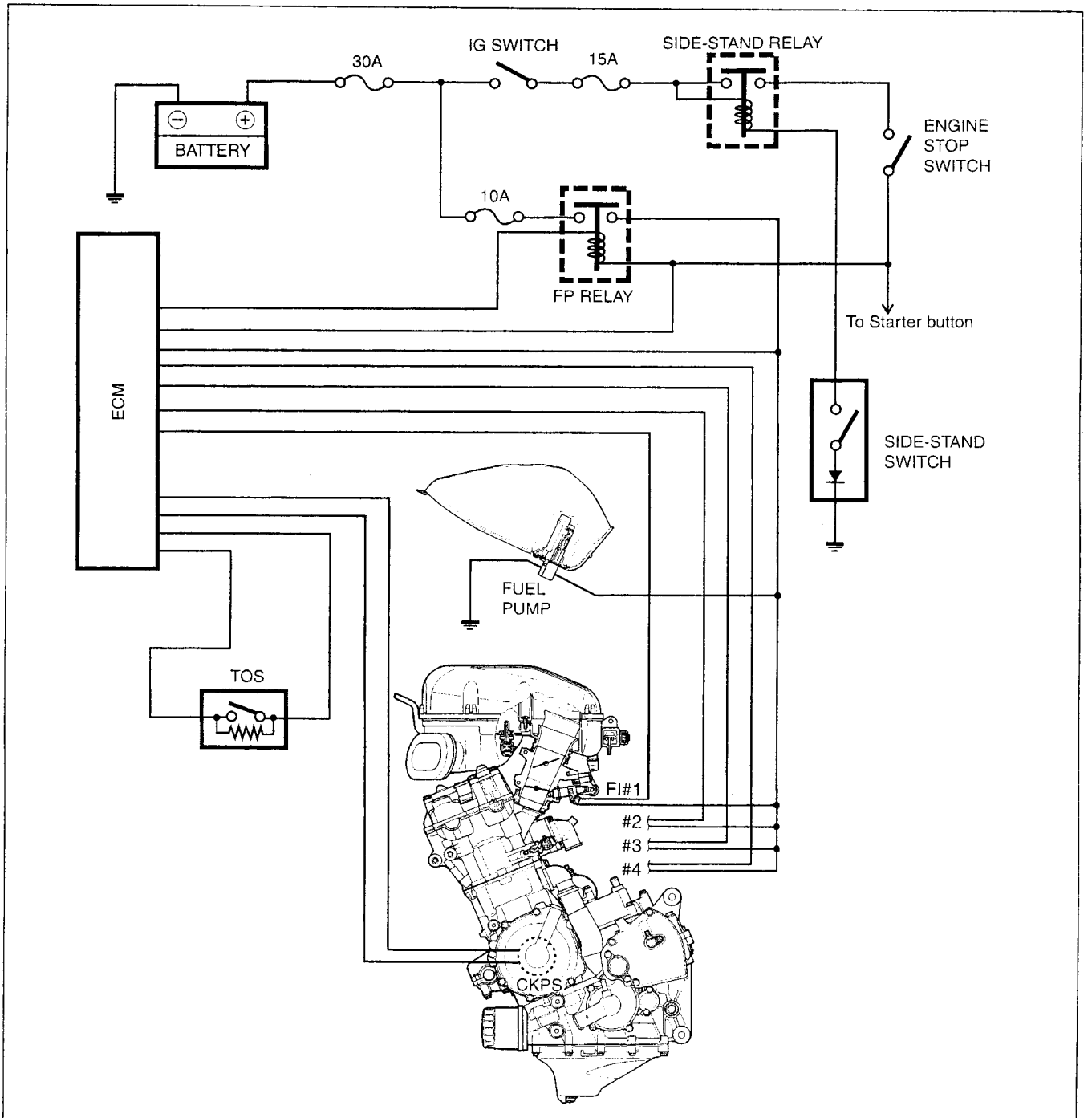

ECM (FI CONTROL UNIT)

The ECM is located under the seat.

The ECM consists of CPU (Central Processing Unit), memory (ROM) and I/O (Input/Output) sections. The signal from each sensor is sent to the input section and then sent to CPU. On the basis of signal information received, CPU calculates the volume of fuel necessary for injection using maps programmed for varying engine conditions. Then, the operation signal of the fuel injection is sent from the output section to the fuel injector.

The eight kinds of independent program maps are programmed in the ROM.

These eight kinds of maps are designed to compensate for differences of the intake/exhaust systems and cooling performance.

LIGHT LOAD: When the engine is running in a light load, the fuel injected volume (time) is determined the basis of the intake air pressure and engine speed.

HEAVY LOAD: When the engine is running in a heavy load, the fuel injected volume (time) is determined the basis of the throttle valve opening and engine speed.

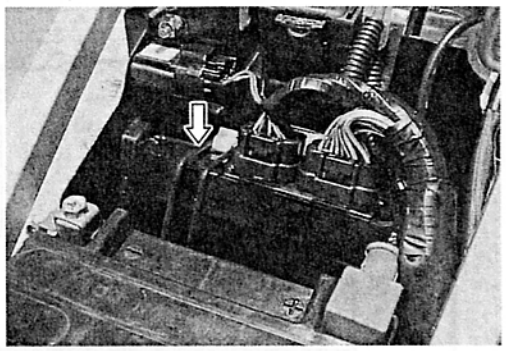

INJECTION TIMING

The system employs a sequential, four-cylinder independent injection type, using the crankshaft position sensor (signal generator) to determine the piston position (injection timing and ignition timing) and the camshaft position sensor to identify the cylinder during operation, and these information are sent to the ECM. This makes it possible to inject the optimum volume of fuel in the best timing for the engine operating conditions.

When the crankshaft begins to turn at the time of starting, the ECM sends the signals to the four injectors, #1, #2, #3 and #4 to have them inject fuel simultaneously. From the second turn onward, the sequential four-cylinder independent injection occurs as explained above.

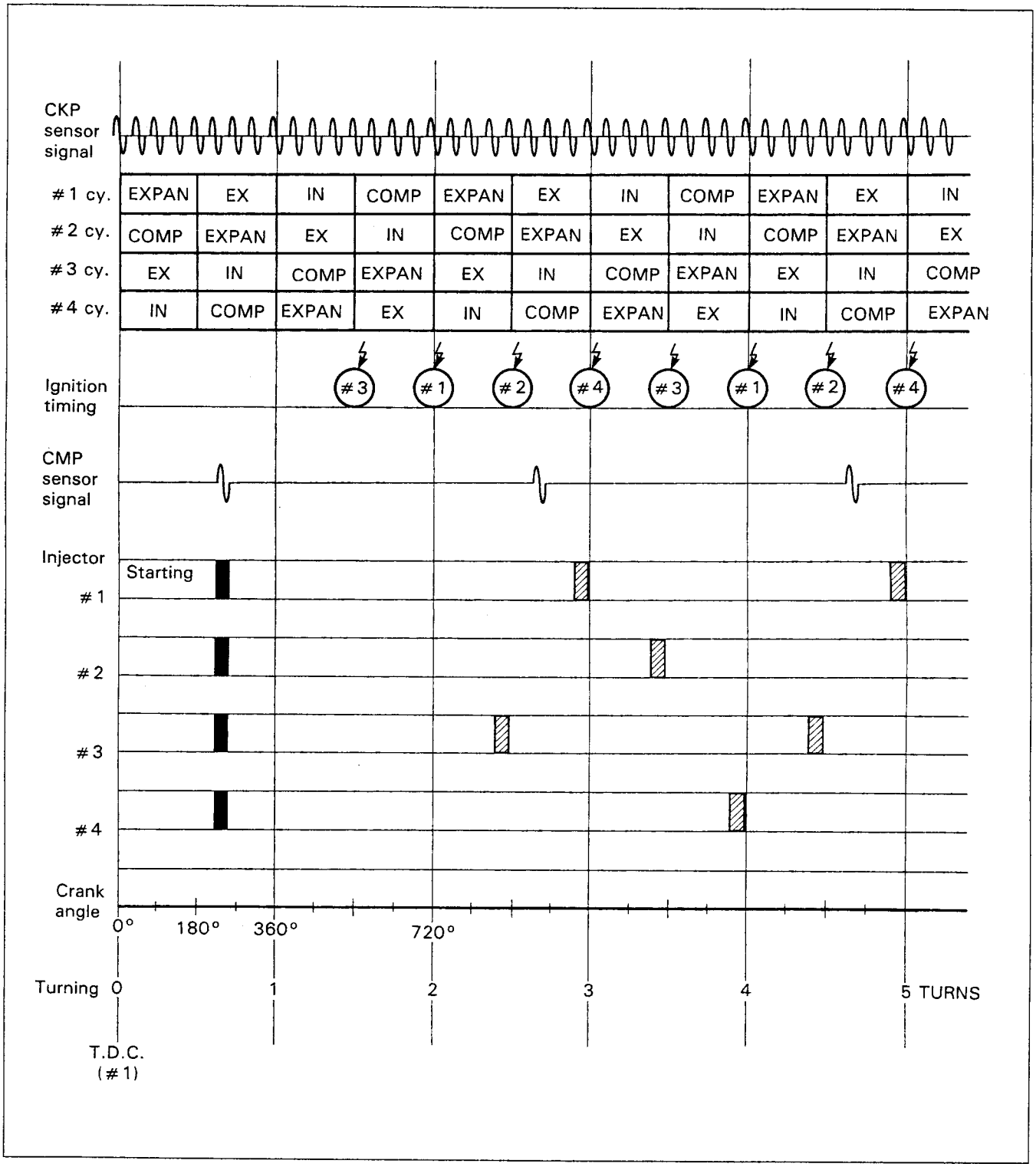

SENSORS

INTAKE AIR PRESSURE SENSOR (IAP SENSOR)

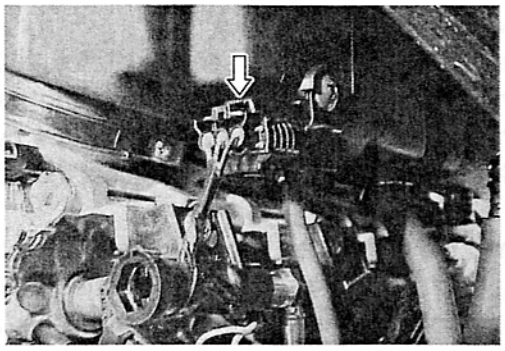

The intake air pressure sensor is located at the rear side of the air cleaner box and its vacuum hose is connected to the throttle body.
The sensor detects the intake air pressure, which is then converted into voltage signal and sent to the ECM.
The basic fuel injection time (volume) is determined according to the voltage signal (output voltage).
The voltage signal increases when the intake air pressure is high.

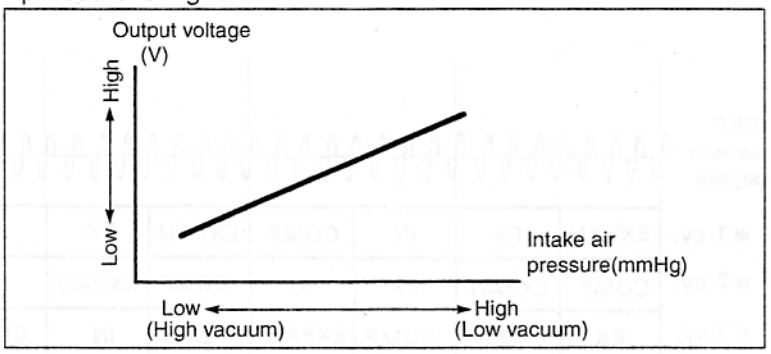

THROTTLE POSITION SENSOR (TP SENSOR)

The throttle position sensor is installed on the No.4 throttle body.
The throttle position sensor is a kind of variable resistor which detects the throttle opening angle.
The battery voltage in the sensor is changed to the throttle position voltage which is then sent to the ECM.
The basic fuel injection time (volume) is determined according to the voltage signal (output voltage).
The voltage signal increases as the throttle is opened wider.

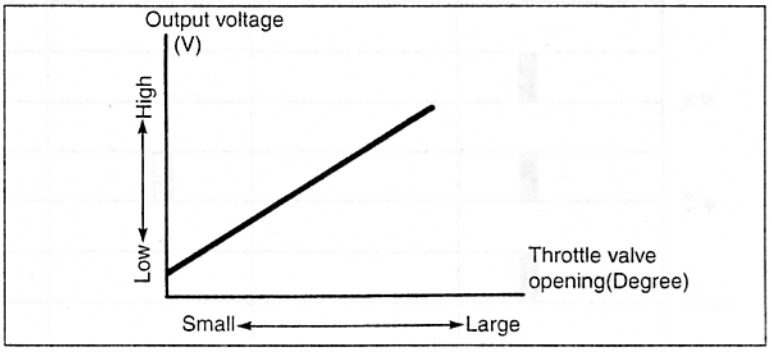

CRANKSHAFT POSITION SENSOR (CKP SENSOR)

The signal rotor is mounted on the right end of the crankshaft, and the crankshaft position sensor (Pick-up coil) is installed on the right side of the middle crankcase.

The sensor generates the pick-up signal to be supplied to the ECM.

The ECM calculates and decides both the fuel injection timing and ignition timing.

The injection volume increases when the engine rpm is high.

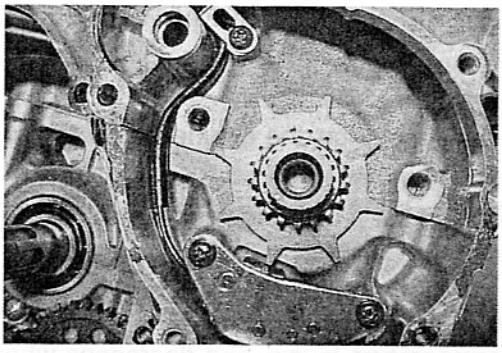

CAMSHAFT POSITION SENSOR (CMP SENSOR)

The signal rotor is installed on the intake camshaft, and the camshaft position sensor (Pick-up coil) is installed on the cylinder head cover.

The sensor generates the pick-up signal to be supplied to the ECM.

The ECM calculates and decides the cylinder identity and sequential injection timing.

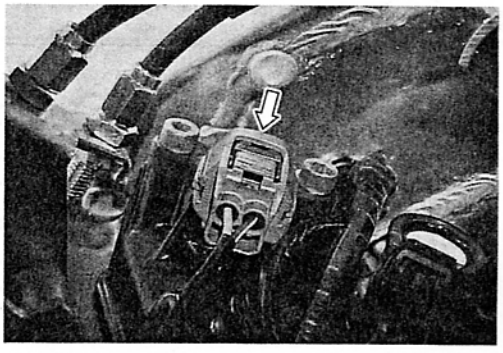

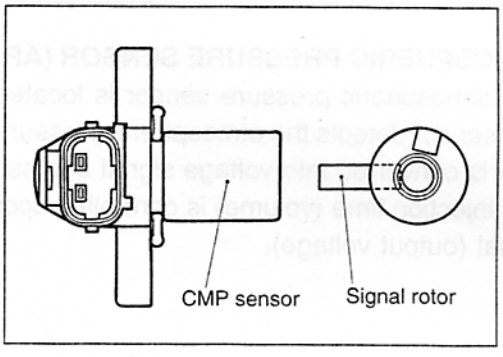

INTAKE AIR TEMPERATURE SENSOR (IAT SENSOR)

The intake air temperature sensor is installed at the right side of the air cleaner box.

The sensor detects the intake air temperature in thermistor resistance value. With this resistance value converted to voltage signal, the signal is sent to the ECM. The injection volume increases as intake air temperature decreases.

The thermistor resistance value increases when the intake air temperature is low, and decreases when the intake air temperature is high.

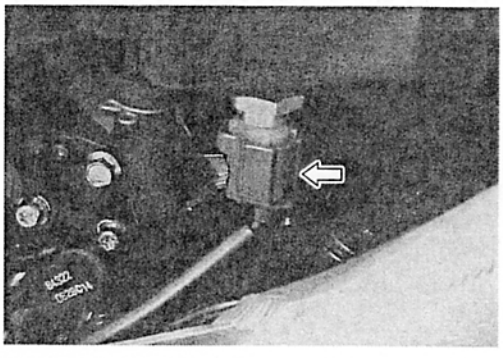

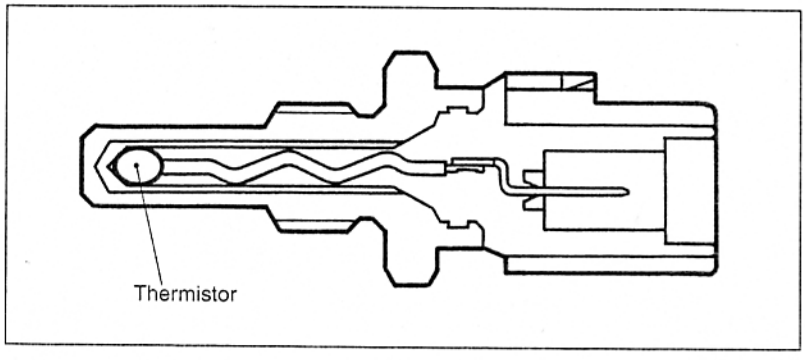

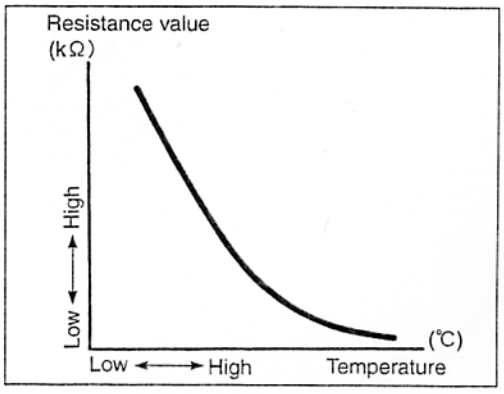

ENGINE COOLANT TEMPERATURE SENSOR (ECT SENSOR)

The engine coolant temperature sensor is installed at the rear side of the cylinder head.
The sensor detects the engine coolant temperature in thermistor resistance value, which is then converted to voltage signal and sent to the ECM. The injection volume increases as coolant temperature decreases.

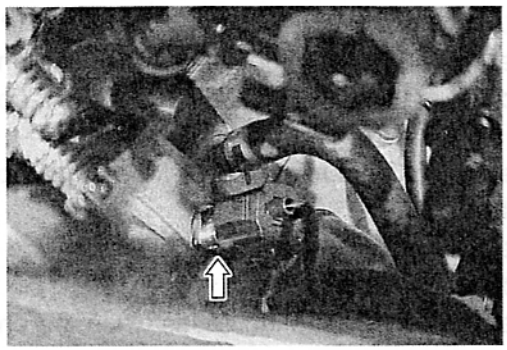

The thermistor resistance value increases when the engine coolant temperature is low, and decreases when the engine coolant temperature is high.

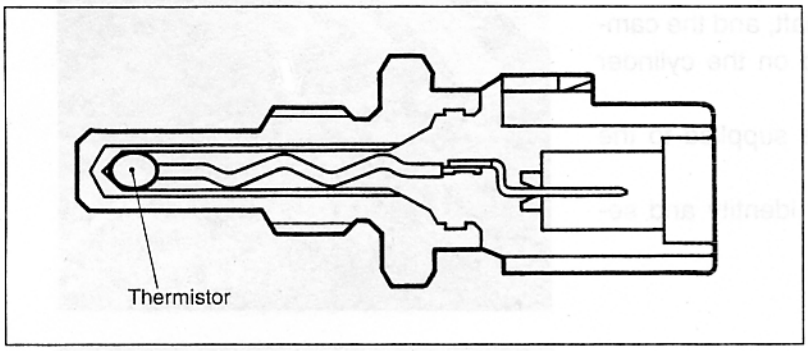

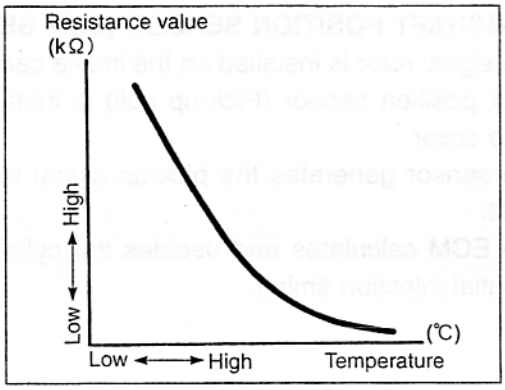

ATMOSPHERIC PRESSURE SENSOR (AP SENSOR)

The atmospheric pressure sensor is located over the ECM.
The sensor detects the atmospheric pressure. The detected pressure is converted into voltage signal and sent to the ECM.
The injection time (volume) is controlled according to the voltage signal (output voltage).

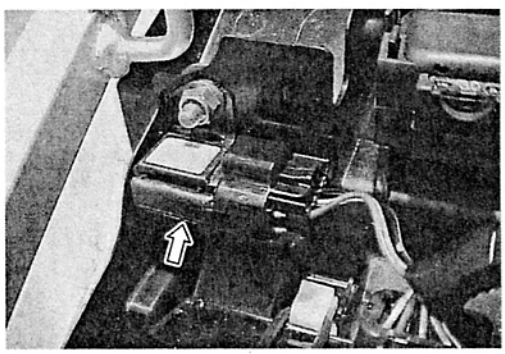

The voltage signal increases as the atmospheric pressure rises.

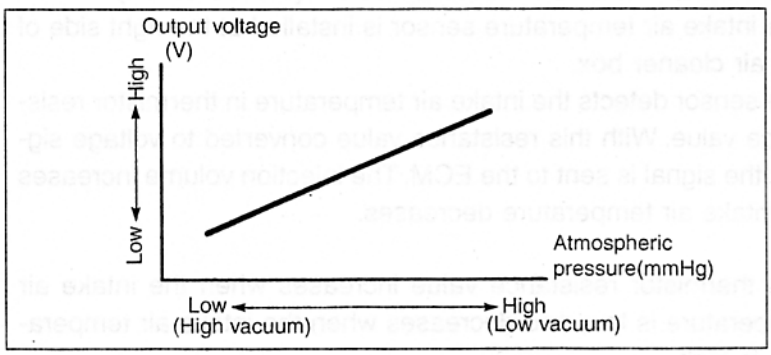

TIP OVER SENSOR (TO SENSOR)

The tip over sensor is located in ahead of the battery holder.
The sensor detects the leaning of the motorcycle. When it leans more than 43°, the mechanical switch turns ON and a signal is sent to the ECM. At the same time, this signal cuts OFF current supply to the fuel pump, fuel injectors and ignition coils.

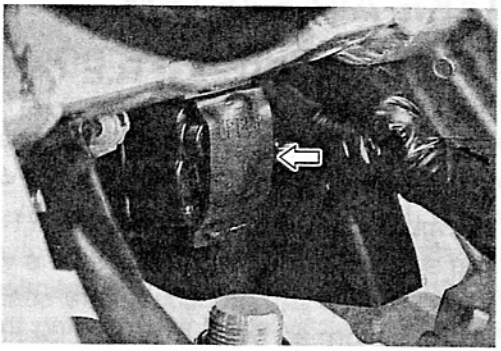

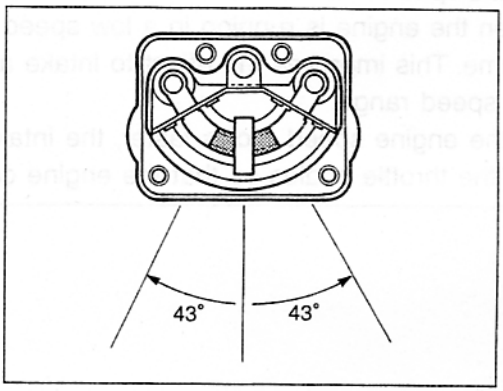

SECONDARY THROTTLE POSITION SENSOR (STP SENSOR)

The secondary throttle position sensor is installed on the No.4 throttle body.
The secondary throttle position sensor is a kind of variable resistor which detects the secondary throttle opening angle.
The STP sensor detects the STV actuator movement by the voltage signal which is then sent to the ECM.
The ECM determines the ST valve angle based on the operation map.
The voltage signal increases as the secondary throttle is opened wider.

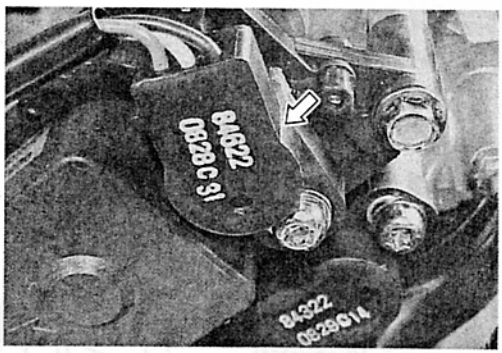

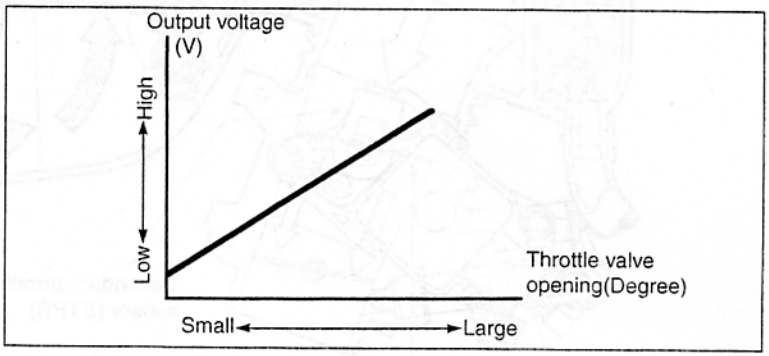

INTAKE AIR SYSTEM

SECONDARY THROTTLE CONTROL SYSTEM

The secondary throttle control system (STCS) consists of the secondary throttle valve (STV), secondary throttle valve actuator (STVA) and secondary throttle position sensor (STPS).

STV is installed in each throttle body. STVA and STPS are installed on the right side of the throttle body assembly. The STV is turned by the STVA.

This system is designed to control the volume and the velocity of intake air so as to improve engine output power. The system produces more seamless and linear throttle response.

This is performed by opening or closing the throttle body intake port according to the gear positions and engine rpm.

When the engine is running in a low speed range, the intake port is almost closed for controlled intake air volume. This improves the effect to intake air flow pulsation so that the engine can output higher power in this speed range.

As the engine speed grows faster, the intake port are gradually open for guiding the proper volume of air into the throttle bodies so that the engine can produce the maximum power in each speed range.

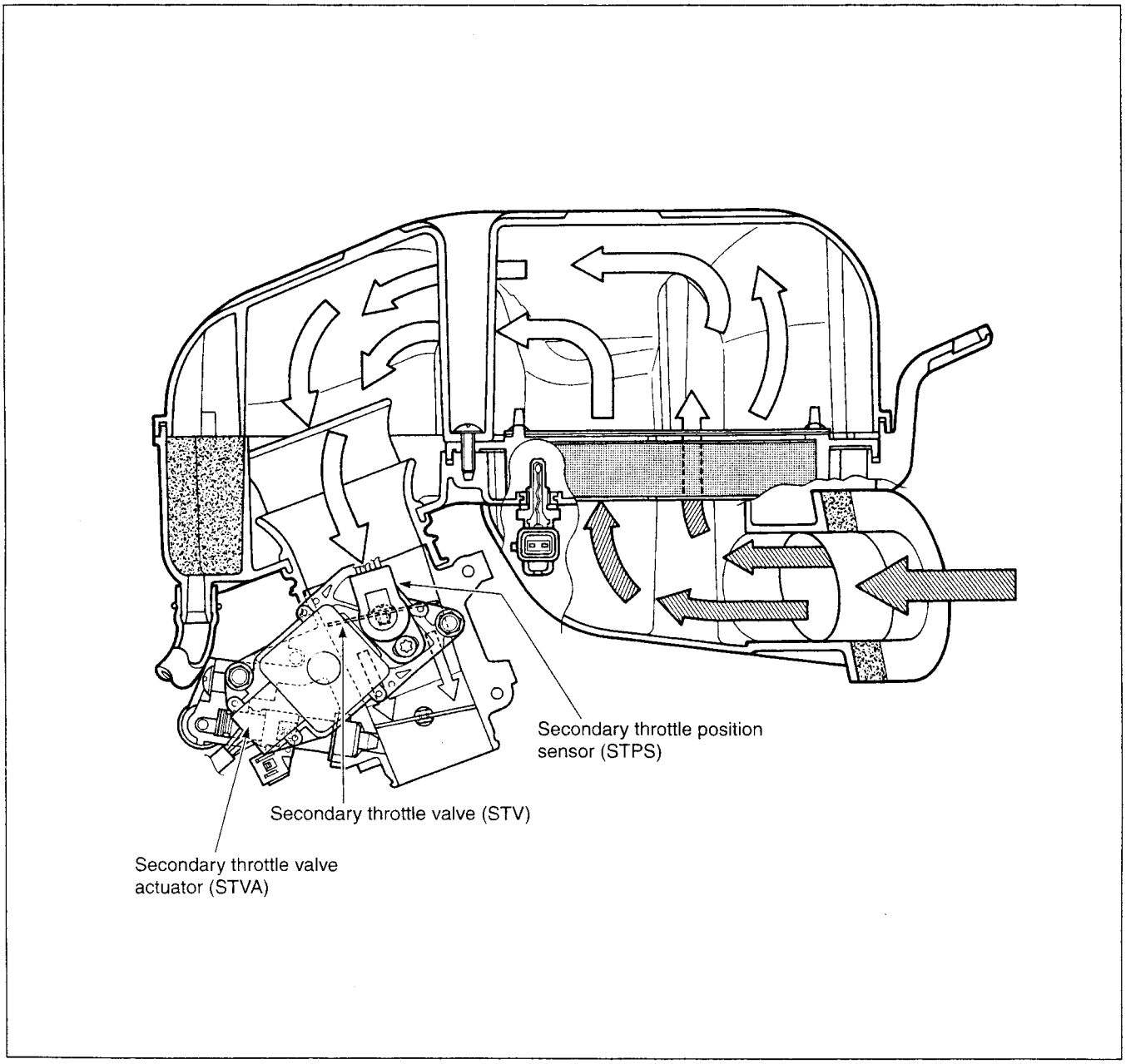

OPERATION

The secondary throttle control system (STCS) is operated by the signal supplied from the ECM. The open/close operation of the secondary throttle valve (STV) is performed by the secondary throttle valve actuator (STVA) which is controlled by the secondary throttle control unit (STCU) by changing the current direction in the STVA motor.

The STPS detects the STVA movement by measuring the voltage and then the ECM determines the STV angle based on the operation map.

Whenever turning the ignition switch ON, the STVA automatically drives the STV and detects full close/open position voltages and sets to original position.

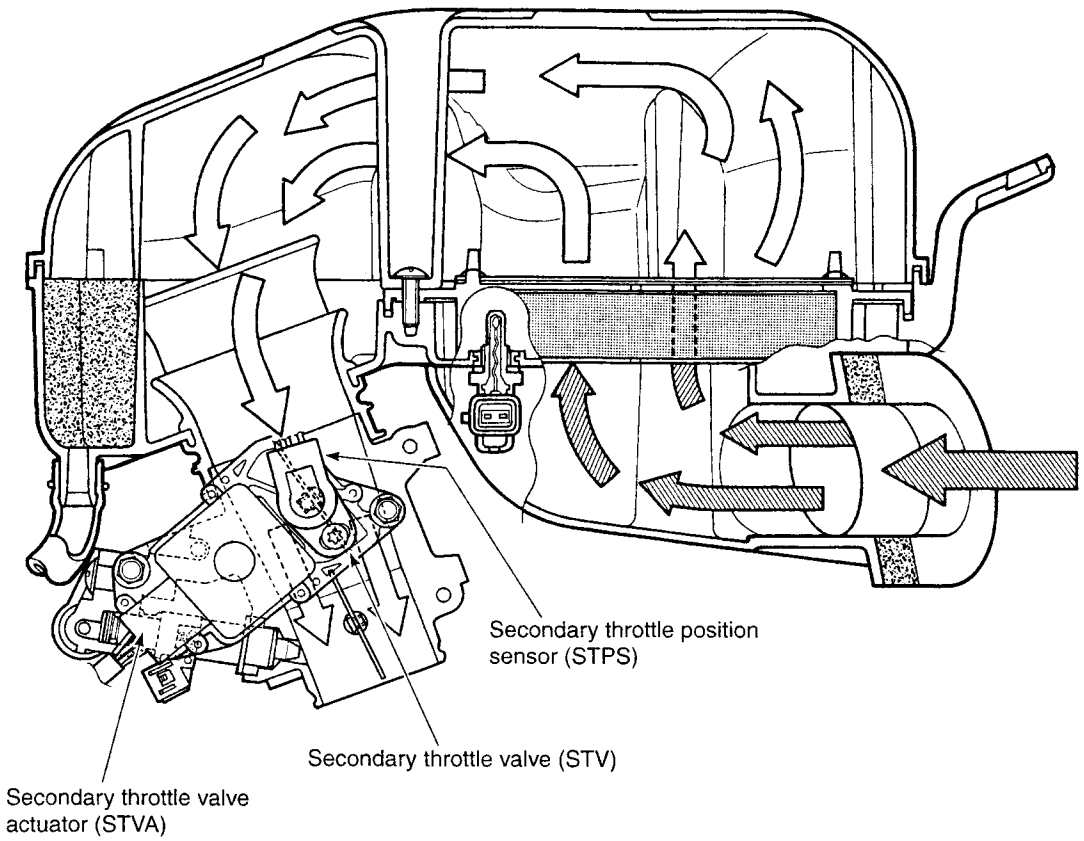

EXHAUST SYSTEM

EXHAUST CONTROL SYSTEM

The exhaust control system (EXCS) consists of the exhaust control valve (EXCV), exhaust control valve actuator (EXCVA) and exhaust control valve cables (EXCV cables).

EXCV is installed between the exhaust pipes and joint pipe. EXCVA is mounted on the right side of the main frame. The EXCV is operated by the EXCVA via the cables. This system is designed to improve the engine torque at low engine rpms and to reduce the exhaust noise.

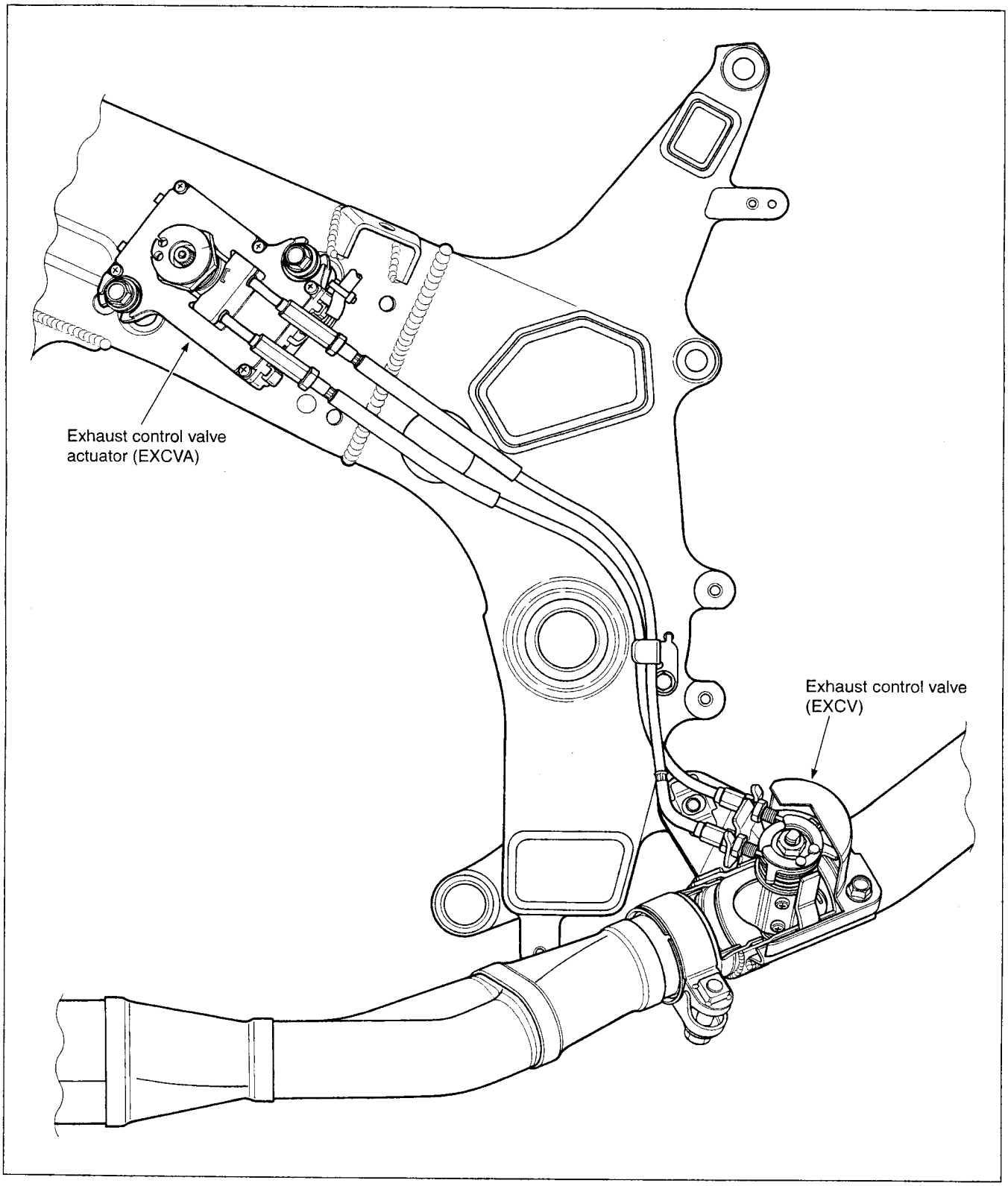

OPERATION

The EXCS is operated by the signal supplied from the ECM.

The open/close operation of the EXCV is performed by the EXCVA which is controlled by the ECM by changing the current direction of the actuator motor. The position sensor (incorporated in the EXCVA) detects the EXCVA movement by measuring the voltage and then the ECM determines the EXCV opening angle based on the engine rpm and gear positions.

Whenever turning the ignition switch ON, the EXCVA automatically drives the EXCV and detects full close/open position voltages and sets the EXCV to middle position.

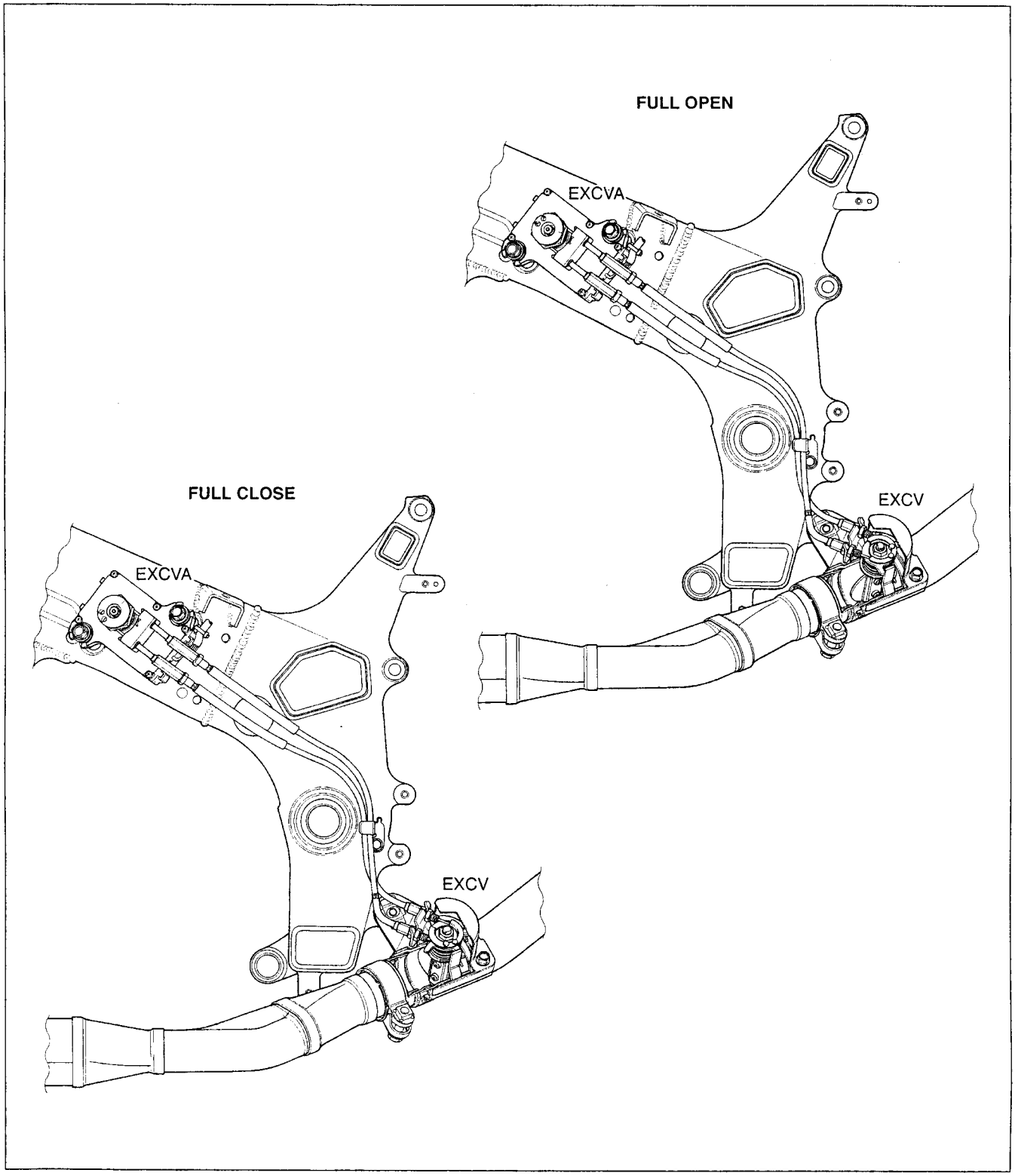

FI SYSTEM PARTS LOCATION

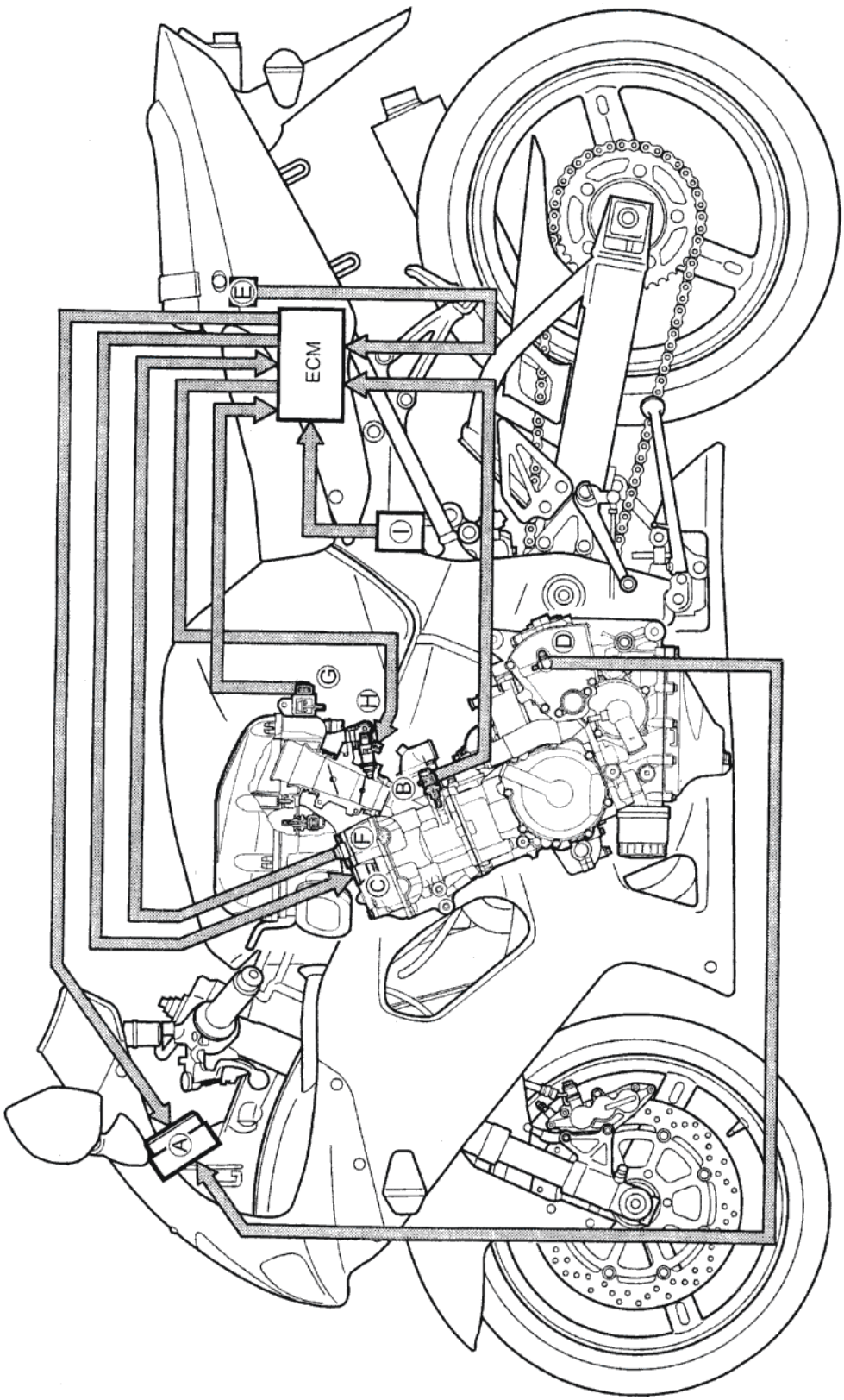

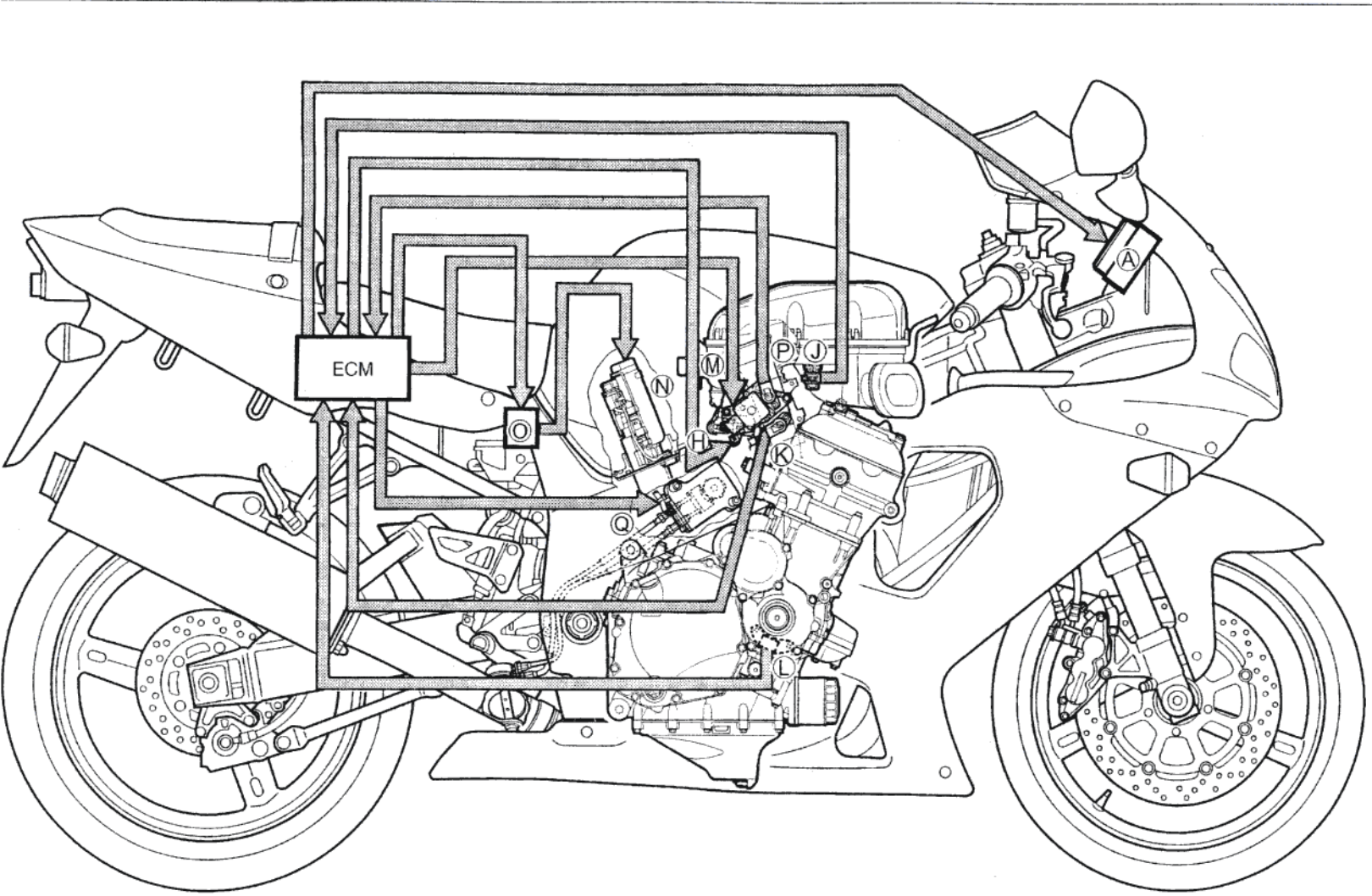

Ⓙ Intake air temperature sensor (IATS)
Ⓚ Throttle position sensor (TPS)
Ⓛ Crankshaft position sensor (CKPS)
Ⓜ Secondary throttle valve actuator (STVA)
Ⓝ Fuel pump (FP)
Ⓞ Fuel pump relay (FP RELAY)
Ⓟ Secondary throttle position sensor (STPS)
Ⓠ Exhaust control valve actuator (EXCVA)

FI SYSTEM DIAGRAM

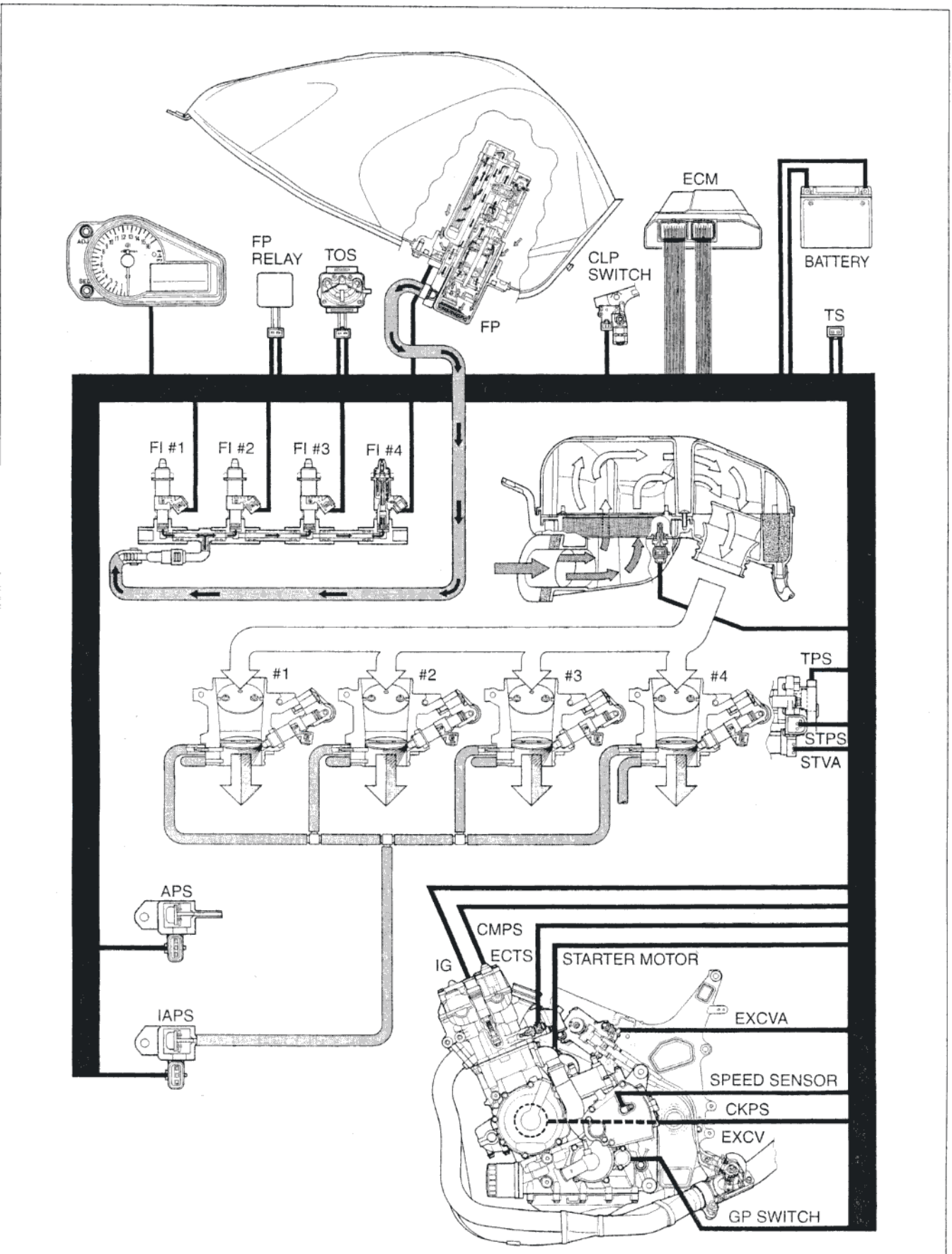

FI SYSTEM WIRING DIAGRAM

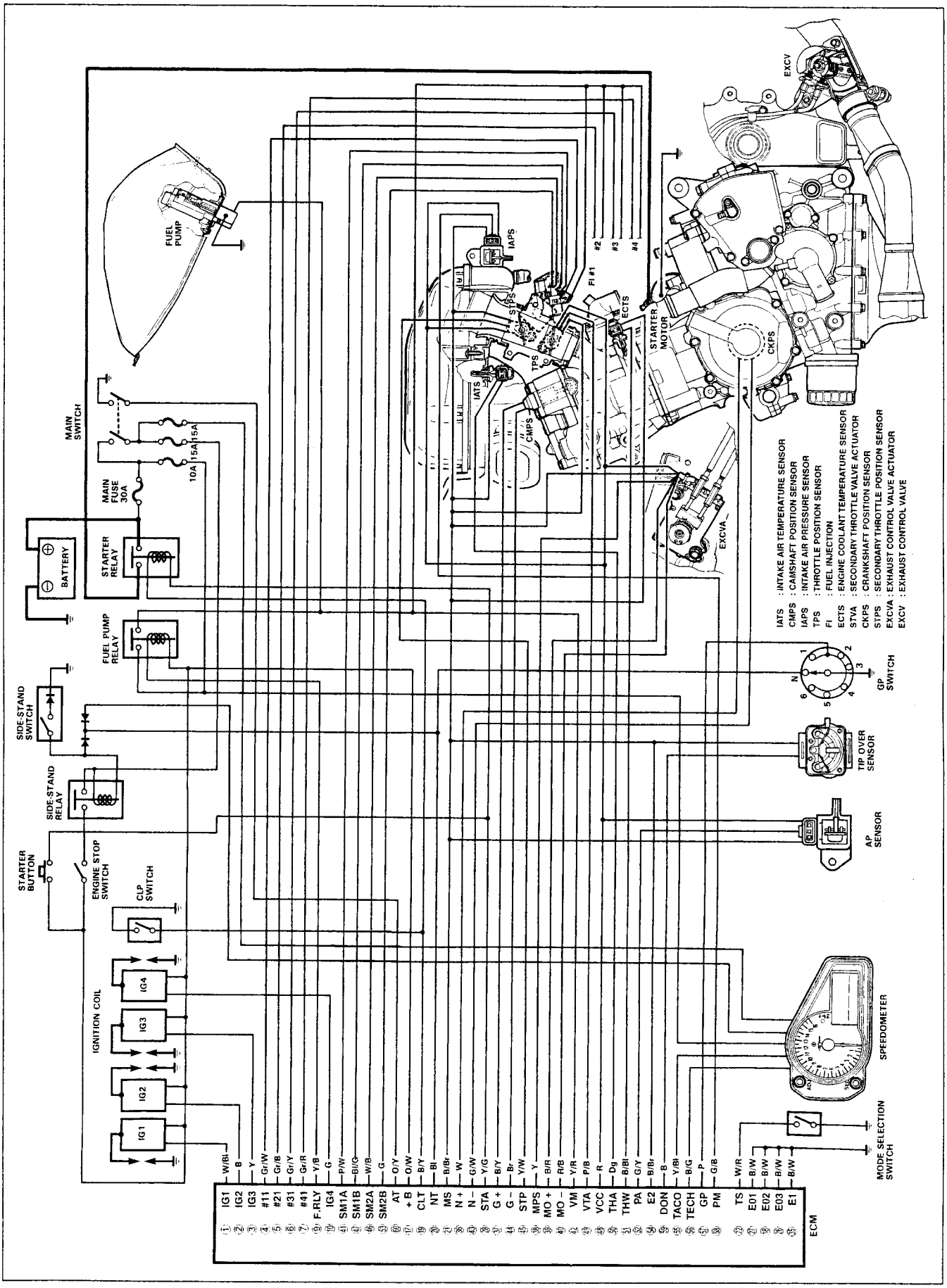

SELF-DIAGNOSIS FUNCTION

The self-diagnosis function is incorporated in the ECM. The function has two modes, "User mode" and "Dealer mode". The user can only be notified by the LCD (DISPLAY) panel and LED (FI light). To check the function of the individual FI system devices, the dealer mode is prepared. In this check, the special tool is necessary to read the code of the malfunction items.

USER MODE

MALFUNCTION	LCD (DISPLAY) INDICATION	FI LIGHT INDICATION	INDICATION MODE
"NO"	Coolant Temp.	—	—
"YES"	Coolant Temp. and "FI" letters *1	FI light turns ON.	Each 2 sec. Temp. or "FI" is indicated.
Engine can start			
Engine can not start	"FI" letter *2	FI light turns ON and blinks.	"FI" is indicated continuously.

*1

When one of the signals is not received by ECM, the fail-safe circuit works and injection is not stopped. In this case, "FI" and coolant temp. are indicated in the LCD panel and motorcycle can run.

*2

The injection signal is stopped, when the camshaft position sensor signal, crankshaft position sensor signal, tip over sensor signal , #1/#2, #3 and #4 ignition signals, #1, #2, #3 and #4 injector signals, fuel pump relay signal or ignition switch signal is not sent to ECM. In this case, "FI" is indicated in the LCD panel. Motorcycle does not run.

"CHEC": The LCD panel indicates "CHEC" when no communication signal from the ECM is received for 5 seconds.

For Example:

The ignition switch is turned ON, and the engine stop switch is turned OFF. In this case, the speedometer does not receive any signal from the ECM, and the panel indicates "CHEC".

If CHEC is indicated, the LCD does not indicate the trouble code. It is necessary to check the wiring harness between ECM and speedometer couplers.

The possible cause of this indication is as follows;

Engine stop switch is in OFF position. Side-stand/ignition inter-lock system is not working. Ignition fuse is burnt.

NOTE:

Until starting the engine, the FI light turns ON.

The FI light is also turned ON when engine temperature is high or oil pressure is low.

DEALER MODE

The defective function is memorized in the computer. Use the special tool's coupler to connect to the dealer mode coupler. The memorized malfunction code is displayed on LCD (DISPLAY) panel. Malfunction means that the ECM does not receive signal from the devices. These affected devices are indicated in the code form.

TOOL 09930-82710: Mode select switch

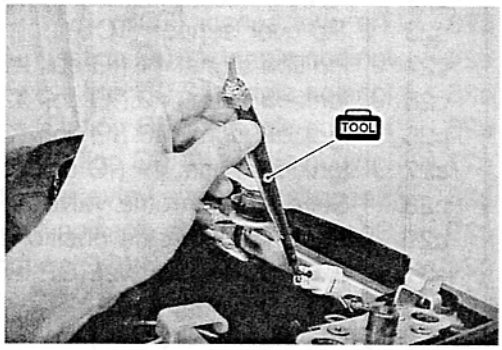

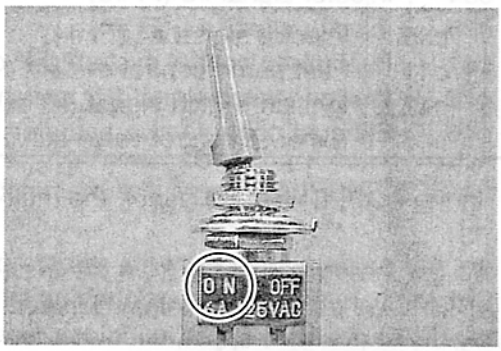

⚠ CAUTION

Before checking the malfunction code, do not disconnect the ECM lead wire couplers. If the couplers from the ECM are disconnected, the malfunction code memory is erased and the malfunction code can not checked.

MALFUNCTION	LCD (DISPLAY) INDICATION	FI LIGHT INDICATION	INDICATION MODE
"NO"	c00	FI light turns OFF.	—
"YES"	c** code is indicated from small numeral to large one.		For each 2 sec., code is indicated.

CODE	MALFUNCTION PART	REMARKS
c00	None	No defective part
c11	Camshaft position sensor (CMPS)	
c12	Crankshaft position sensor (CKPS)	Pick-up coil signal, signal generator
c13	Intake air pressure sensor (IAPS)	

CODE	MALFUNCTION PART	REMARKS
c14	Throttle position sensor (TPS)	*3
c15	Engine coolant temp. sensor (ECTS)	
c21	Intake air temp. sensor (IATS)	
c22	Atmospheric pressure sensor (APS)	
c23	Tip over sensor (TOS)	
c24	Ignition signal #1 (IG coil #1)	For #1 cylinder
c25	Ignition signal #2 (IG coil #2)	For #2 cylinder
c26	Ignition signal #3 (IG coil #3)	For #3 cylinder
c27	Ignition signal #4 (IG coil #4)	For #4 cylinder
c28	Secondary throttle valve actuator (STVA)	*4
c29	Secondary throttle position sensor (STPS)	
c31	Gear position signal (GP switch)	
c32	Injector signal #1 (FI #1)	For #1 cylinder
c33	Injector signal #2 (FI #2)	For #2 cylinder
c34	Injector signal #3 (FI #3)	For #3 cylinder
c35	Injector signal #4 (FI #4)	For #4 cylinder
c41	Fuel pump control system (FP control system)	Fuel pump, Fuel pump relay
c42	Ignition switch signal (IG switch signal)	Anti-theft
c46	Exhaust control valve actuator (EXCVA)	

In the LCD (DISPLAY) panel, the malfunction code is indicated from small code to large code.

*3

To get the proper signal from the throttle position sensor, the sensor basic position is indicated in the LCD (DISPLAY) panel. The malfunction code is indicated in three digits. In front of the three digits, a line appears in any of the position, upper, middle or lower line. If the indication is upper or lower line when engine rpm is 1 150 rpm, slightly turn the throttle position sensor and bring the line to middle.

In the normal condition, the throttle valve stop screw pushes throttle valves slightly, and indication point is middle line.

*4

When the secondary throttle valve actuator and secondary throttle position sensor signals are not sent to ECM. In this case, c29 is indicated.

Setting procedure:

1. Adjust the engine rpm to 1 150 rpm. (☞2-14)
2. Stop the engine and connect the special tool (Mode select switch) to the dealer mode coupler at the wiring harness.
3. If the throttle position sensor adjustment is necessary, loosen the screws and turn the throttle position sensor and bring the line to middle.
4. Then, tighten the screws to fix the throttle position sensor.

TOOL 09930-11950: Torx wrench

C00	← Incorrect
C00	← Correct position
C00	← Incorrect

The LCD indicates 0.4 sec./time, and two times show the correct position, where it is fixed.

FAIL-SAFE FUNCTION

FI system is provided with fail-safe function to allow the engine to start and the motorcycle to run in a minimum performance necessary even under malfunction condition.

ITEM		FAIL-SAFE MODE	STARTING ABILITY	RUNNING ABILITY
Camshaft position sensor		When camshaft position signal has failed during running, the ECM determines cylinder as # before occurrence of such a failure.	"NO"	"YES"
			Motorcycle can run, but once engine stops, engine can not start.	
Crankshaft position sensor		The motorcycle stops.	"NO"	"NO"
Intake air pressure sensor		Intake air pressure is fixed to 760 mmHg.	"YES"	"YES"
Throttle position sensor		The throttle opening is fixed to full open position. Ignition timing is also fixed.	"YES"	"YES"
Engine coolant temperature sensor		Engine coolant temperature value is fixed to 80°C.	"YES"	"YES"
Intake air temperature sensor		Intake air temperature value is fixed to 40°C.	"YES"	"YES"
Atmospheric pressure sensor		Atmospheric pressure is fixed to 760 mmHg.	"YES"	"YES"
Ignition signal	#1	#1 Ignition-off	"YES"	"YES"
			#2, #3 & #4 cylinders can run.	
	#2	#2 Ignition-off	"YES"	"YES"
			#1, #3 & #4 cylinders can run.	
	#3	#3 Ignition-off	"YES"	"YES"
			#1, #2 & #4 cylinders can run.	
	#4	#4 Ignition-off	"YES"	"YES"
			#1, #2 & #3 cylinders can run.	
Injection signal	#1	#1 Fuel-cut	"YES"	"YES"
			#2, #3 & #4 cylinders can run.	
	#2	#2 Fuel-cut	"YES"	"YES"
			#1, #3 & #4 cylinders can run.	
	#3	#3 Fuel-cut	"YES"	"YES"
			#1, #2 & #4 cylinders can run.	
	#4	#4 Fuel-cut	"YES"	"YES"
			#1, #2 & #3 cylinders can run.	
Secondary throttle valve actuator		Secondary throttle valve is fixed to full close position.	"YES"	"YES"
Secondary throttle position sensor		Secondary throttle valve is fixed to full close position.	"YES"	"YES"
Exhaust control valve actuator		Exhaust control valve is fixed to full open position.	"YES"	"YES"
Gear position signal		Gear position signal is fixed to 6th gear.	"YES"	"YES"

"Yes" means that the engine can start and can run even if the above signal is not received from each sensor. But, the engine running condition is not complete, providing only emergency help (by fail-safe circuit). In this case, it is necessary to bring the motorcycle to the workshop for complete repair.

When two ignition signals or two injector signals are not received by ECM, the fail-safe circuit can not work and ignition or injection is stopped.

FI SYSTEM TROUBLESHOOTING

CUSTOMER COMPLAINT ANALYSIS

Record details of the problem (failure, complaint) and how it occurred as described by the customer. For this purpose, use of such an inspection form will facilitate collecting information to the point required for proper analysis and diagnosis.

EXAMPLE: CUSTOMER PROBLEM INSPECTION FORM

User name:	Model:	VIN:	
Date of issue:	Date Reg.	Date of problem:	Mileage:

Malfunction indicator lamp condition (LED)	☐ Always ON ☐ Sometimes ON ☐ Always OFF ☐ Good condition
Malfunction display/code (LCD)	User mode:☐ No display ☐ Malfunction display ( )
	Dealer mode:☐ No code ☐ Malfunction code ( )

PROBLEM SYMPTOMS

☐ **Difficult Starting**	☐ **Poor Driveability**
☐ No cranking	☐ Hesitation on acceleration
☐ No initial combustion	☐ Back fire/☐ After fire
☐ No combustion	☐ Lack of power
☐ Poor starting at	☐ Surging
(☐ cold ☐ warm ☐ always)	☐ Abnormal knocking
☐ Other_____	☐ Other_____
☐ **Poor Idling**	☐ **Engine Stall when**
☐ Poor fast Idle	☐ Immediately after start
☐ Abnormal idling speed	☐ Throttle valve is opened
(☐ High ☐ Low) (r/min)	☐ Throttle valve is closed
☐ Unstable	☐ Load is applied
☐ Hunting (r/min. to r/min)	☐ Other
☐ Other_____	
☐ OTHERS:	

MOTORCYCLE/ENVIRONMENTAL CONDITION WHEN PROBLEM OCCURS

Environmental condition	
Weather	☐ Fair ☐ Cloudy ☐ Rain ☐ Snow ☐ Always ☐ Other
Temperature	☐ Hot ☐ Warm ☐ Cool ☐ Cold (°F/ °C) ☐ Always
Frequency	☐ Always ☐ Sometimes (times/ day, month) ☐ Only once
	☐ Under certain condition
Road	☐ Urban ☐ Suburb ☐ Highway ☐ Mountainous (☐ Uphill ☐ Downhill)
	☐ Tarmacadam ☐ Gravel ☐ Other
Motorcycle condition	
Engine condition	☐ Cold ☐ Warming up phase ☐ Warmed up ☐ Always ☐ Other at starting
	☐ Immediately after start ☐ Racing without load ☐ Engine speed (r/min)
Motorcycle condition	During driving: ☐ Constant speed ☐ Accelerating ☐ Decelerating
	☐ Right hand corner ☐ Left hand corner ☐ When shifting (Gear position)
	☐ At stop ☐ Motorcycle speed when problem occurs (km/h, Mile/h)
	☐ Other_____

NOTE:

The above form is a standard sample. It should be modified according to conditions characteristic of each market.

SELF-DIAGNOSTIC PROCEDURES

- Don't disconnect couplers from ECM, battery cable from battery, ECM ground wire harness from engine or main fuse before confirming malfunction code (self-diagnostic trouble code) stored in memory. Such disconnection will erase memorized information in ECM memory.
- Malfunction code stored in ECM memory can be checked by the special tool.
- Before checking malfunction code, read SELF-DIAGNOSIS FUNCTION "USER MODE and DEALER MODE" (☞ 4-28 and -29) carefully to have good understanding as to what functions are available and how to use it.
- Be sure to read "PRECAUTIONS for Electrical Circuit Service" (☞ 4-4) before inspection and observe what is written there.
- Remove the rear seat.
- Connect the special tool to the dealer mode coupler Ⓐ at the wiring harness, and start the engine or crank the engine for more than 4 seconds.
- Turn the special tool's switch ON and check the malfunction code to determine the malfunction part.

TOOL **09930-82710: Mode select switch**

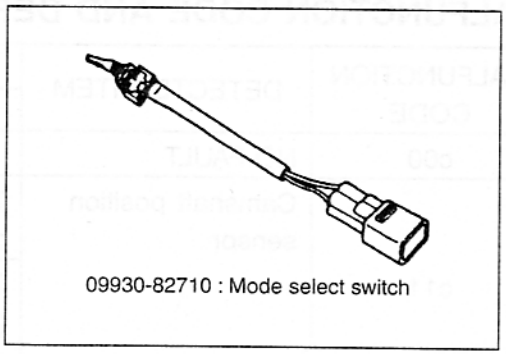

09930-82710 : Mode select switch

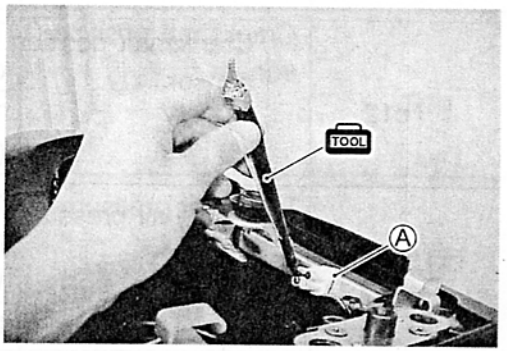

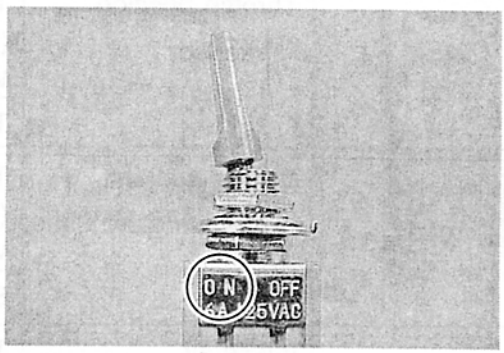

SELF-DIAGNOSIS RESET PROCEDURE

- After repairing the trouble, turn OFF the ignition switch and turn ON again.
  If the malfunction code indicates (c00), the malfunction is cleared.
- Disconnect the special tool from the dealer mode coupler.

MALFUNCTION CODE AND DEFECTIVE CONDITION

MALFUNCTION CODE	DETECTED ITEM	DETECTED FAILURE CONDITION CHECK FOR
c00	NO FAULT	———
c11	Camshaft position sensor	The signal does not reach ECM for more than 4 sec. after receiving the starter signal.
		The camshaft position sensor wiring and mechanical parts. (Camshaft position sensor, intake cam pin, wiring/coupler connection)
c12	Crankshaft position sensor	The signal does not reach ECM for more than 4 sec. after receiving the starter signal.
		The crankshaft position sensor wiring and mechanical parts. (Crankshaft position sensor, wiring/coupler connection)
c13	Intake air pressure sensor	The sensor should produce following voltage. (0.5 V ≦ sensor voltage < 4.85 V) Without the above range, c13 is indicated.
		Intake air pressure sensor, wiring/coupler connection.
c14	Throttle position sensor	The sensor should produce following voltage. (0.2 V ≦ sensor voltage < 4.8 V) Without the above range, c14 is indicated.
		Throttle position sensor, wiring/coupler connection.
c15	Engine coolant temperature sensor	The sensor voltage should be the following. (0.15 V ≦ sensor voltage < 4.85 V) Without the above range, c15 is indicated.
		Engine coolant temperature sensor, wiring/coupler connection.
c21	Intake air temperature sensor	The sensor voltage should be the following. (0.15 V ≦ sensor voltage < 4.85 V) Without the above range, c21 is indicated.
		Intake air temperature sensor, wiring/coupler connection.
c22	Atmospheric pressure sensor	The sensor voltage should be the following. (0.5 V ≦ sensor voltage < 4.85 V) Without the above range, c22 is indicated.
		Atm. pressure sensor, wiring/coupler connection.
c23	Tip over sensor	The sensor voltage should be less than the following for more than 2 sec. after ignition switch turns ON. (sensor voltage < 4.85 V) Without the above value, c23 is indicated.
		Tip over sensor, wiring/coupler connection.
c24, c25, c26 or c27	Ignition signal	Crankshaft position sensor (pick-up coil) signal is produced but signal from ignition coil is interrupted continuous by two times or more. In this case, the code c24, c25, c26 or c27 is indicated.
		Ignition coil, wiring/coupler connection, power supply from the battery.

c28	Secondary throttle valve actuator	When no actuator control signal is supplied from the ECM or communication signal does not reach ECM or operation voltage does not reach STVA motor, c28 is indicated. STVA can not operate.
		STVA lead wire/coupler.
c29	Secondary throttle position sensor	The sensor should produce following voltage. (0.2 V ≦ sensor voltage < 4.8 V) Without the above range, c29 is indicated.
		Secondary throttle position sensor, wiring/coupler connection.
c31	Gear position signal	Gear position signal voltage should be higher than the following for more than 3 seconds. (Gear position sensor voltage > 0.60 V) Without the above value, c31 is indicated.
		Gear position sensor, wiring/coupler connection. Gearshift cam etc.
c32, c33, c34 or c35	Fuel injector signal	When fuel injection signal stops, the c32, c33, c34 or c35 is indicated.
		Injector, wiring/coupler connection, power supply to the injector.
c41	Fuel pump relay signal	When no signal is supplied from fuel pump relay, c41 is indicated.
		Fuel pump relay, connecting lead, power source to fuel pump relay.
c42	Ignition switch signal	Ignition switch signal is not input in the ECM.
		Ignition switch, lead wire/coupler.
c46	Exhaust control valve actuator	EXCVA position sensor produces following voltage. (0.2 V ≦ sensor voltage < 4.8 V) Without the above value, c46 is indicated. EXCVA motor can not move.
		EXCVA, EXCVA adjustment, lead wire/coupler.

"C11" CMP SENSOR CIRCUIT MALFUNCTION

DETECTED CONDITION	POSSIBLE CAUSE
No CMP sensor signal for 4 seconds at engine cranking.	• Metal particles or foreign material being attached on the CMP sensor and rotor tip. • CMP sensor circuit open or short. • CMP sensor malfunction. • ECM malfunction.

INSPECTION

- Lift and support the fuel tank with its prop stay. (☞4-56)
- Remove the air cleaner box. (☞4-66)

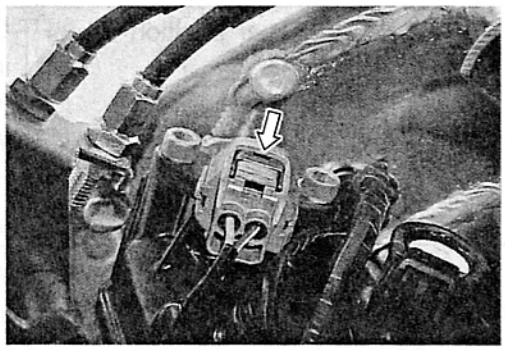

1 Turn the ignition switch OFF.
Check the CMP sensor coupler for loose or poor contacts.
If OK, then measure the CMP sensor resistance.
Disconnect the CMP sensor coupler and measure the resistance.

DATA **CMP sensor resistance: 0.9 – 1.7 kΩ (Terminal – Terminal)**

If OK, then check the continuity between each terminal and ground.

DATA **CMP sensor continuity: ∞Ω (Infinity) (Terminal – Ground)**

TOOL **09900-25008: Multi circuit tester**

Tester knob indication: Resistance (Ω)

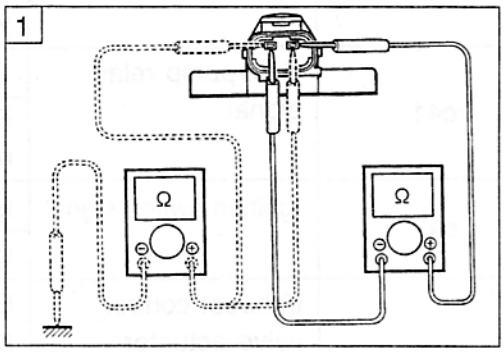

No → Replace the CMP sensor with a new one.

Yes ↓

2 Disconnect the CMP sensor coupler.
Crank the engine a few seconds with the starter motor, and measure the CMP sensor peak voltage at the sensor.

DATA **CMP sensor peak voltage: More than 0.7 V (B/Y – Br)**

Repeat the above test procedure a few times and measure the highest peak voltage.
If OK, then measure the CMP sensor peak voltage at the ECM terminals. (G+/G– or ㊲/㊹)

TOOL **09900-25008: Multi circuit tester**

Tester knob indication: Voltage (⎓)

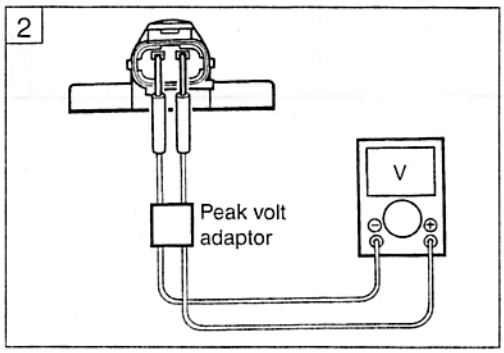

No → Loose or poor contacts on the CMP sensor coupler or ECM coupler. Replace the CMP sensor with a new one.

Yes ↓

B/Y or Br wire open or shorted to ground, or poor ㊲ or ㊹ connection. (☞4-27)
If wire and connection are OK, intermittent trouble or faulty ECM.
Recheck each terminal and wire harness for open circuit and poor connection. (☞4-4)

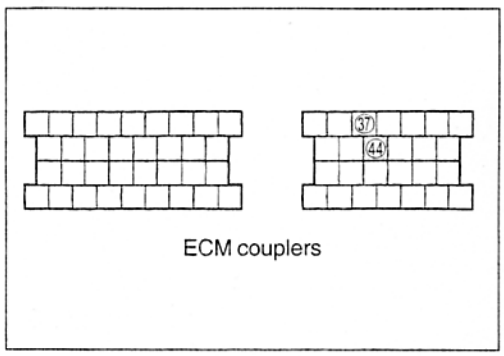

→ Replace the ECM with a new one, and inspect it again.

"C12" CKP SENSOR CIRCUIT MALFUNCTION

DETECTED CONDITION	POSSIBLE CAUSE
No CKP sensor signal for 4 seconds at engine cranking.	• Metal particles or foreign material being attached on the CKP sensor and rotor tips. • CKP sensor circuit open or short. • CKP sensor malfunction. • ECM malfunction.

INSPECTION

- Lift and support the fuel tank with its prop stay. (☞ 4-56)

1 Turn the ignition switch OFF.
Check the CKP sensor coupler for loose or poor contacts.
If OK, then measure the CKP sensor resistance.
Disconnect the CKP sensor coupler and measure the resistance.

DATA **CKP sensor resistance: 70 – 220 Ω (Black – Green)**

If OK, then check the continuity between each terminal and ground.

DATA **CKP sensor continuity: ∞Ω (Infinity) (Black – Ground, Green – Ground)**

TOOL **09900-25008: Multi circuit tester**

Tester knob indication: Resistance (Ω)

No → Replace the CKP sensor with a new one.

Yes ↓

2 Disconnect the CKP sensor coupler.
Crank the engine a few seconds with the starter motor, and measure the CKP sensor peak voltage at the coupler.

DATA **CKP sensor peak voltage: More than 0.5 V (Black – Green)**

Repeat the above test procedure a few times and measure the highest peak voltage.
If OK, then measure the CKP sensor peak voltage at the ECM terminals. (N+/N– or ㊱/㊸)

TOOL **09900-25008: Multi circuit tester**

Tester knob indication: Voltage (⎓)

No → Loose or poor contacts on the CKP sensor coupler or ECM coupler. Replace the CKP sensor with a new one.

Yes ↓

Black or Green wire open or shorted to ground, or poor ㊱ or ㊸ connection. (☞ 4-27)
If wire and connection are OK, intermittent trouble or faulty ECM.
Recheck each terminal and wire harness for open circuit and poor connection. (☞ 4-4)

→ Replace the ECM with a new one, and inspect it again.

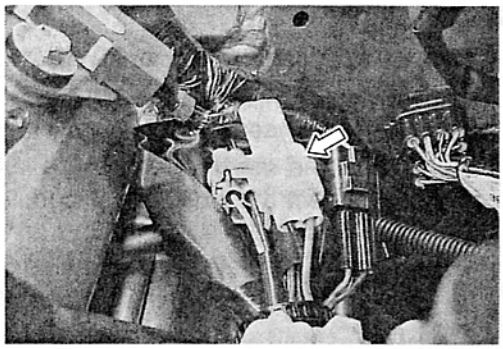

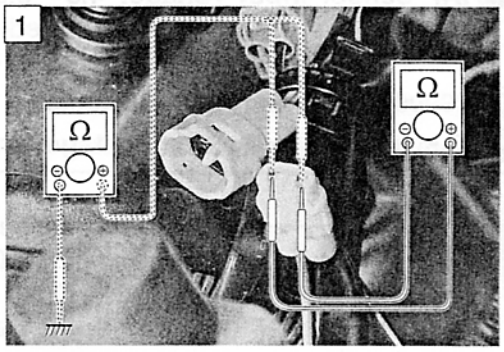

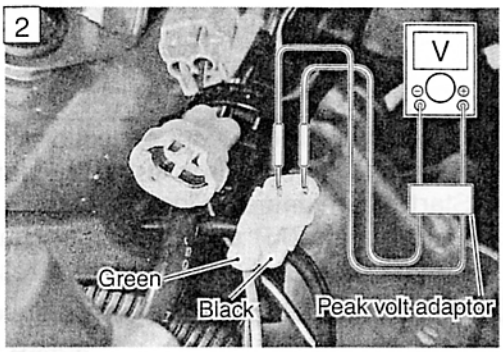

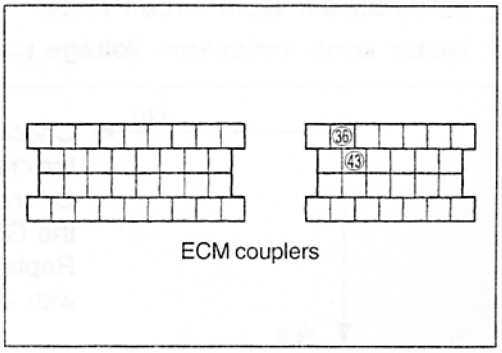

"C13" IAP SENSOR CIRCUIT MALFUNCTION

DETECTED CONDITION	POSSIBLE CAUSE
Low pressure and low voltage. High pressure and high voltage. (0.5 V ≦ Sensor voltage < 4.85 V) (without the above range.) *NOTE:* *Note that atmospheric pressure varies depending on weather conditions as well as altitude.* *Take that into consideration when inspecting voltage.*	• Clogged vacuum passage between throttle body and IAP sensor. • Air being drawn from vacuum passage between throttle body and IAP sensor. • Red wire circuit open or shorted to ground. • B/Br or G/B wire circuit shorted to ground. • IAP sensor malfunction. • ECM malfunction.

INSPECTION

- Lift and support the fuel tank with its prop stay. (☞4-56)

1 Turn the ignition switch OFF.
Check the IAP sensor coupler for loose or poor contacts.
If OK, then measure the IAP sensor input voltage.
Disconnect the IAP sensor coupler.
Turn the ignition switch ON.
Measure the voltage at the Red wire and ground.
If OK, then measure the voltage at the Red wire and B/Br wire.

DATA **IAP sensor input voltage: 4.5 – 5.5 V**
(⊕Red – ⊖Ground)
(⊕Red – ⊖B/Br)

TOOL **09900-25008: Multi circuit tester**
Tester knob indication: Voltage (⎓)

No → Loose or poor contacts on the ECM coupler.
Open or short circuit in the Red wire or B/Br wire.

Yes ▼

2 Connect the IAP sensor coupler.
Insert the copper wires to the lead wire coupler.
Start the engine at idling speed.
Measure the IAP sensor output voltage at the wire side coupler (between G/B and B/Br wires).

DATA **IAP sensor output voltage: Approx. 2.64 V at idle speed (⊕G/B – ⊖B/Br)**

TOOL **09900-25008: Multi circuit tester**
Tester knob indication: Voltage (⎓)

No → Check the vacuum hose for crack or damage.
Open or short circuit in the G/B wire.
Replace the IAP sensor with a new one.

Yes ▼

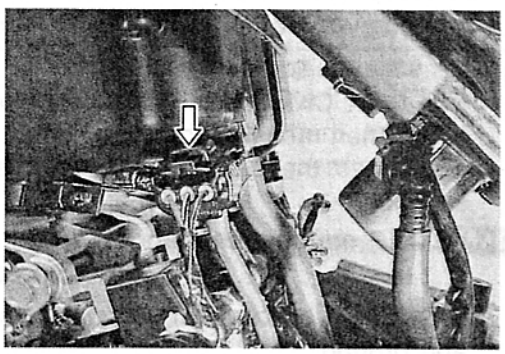

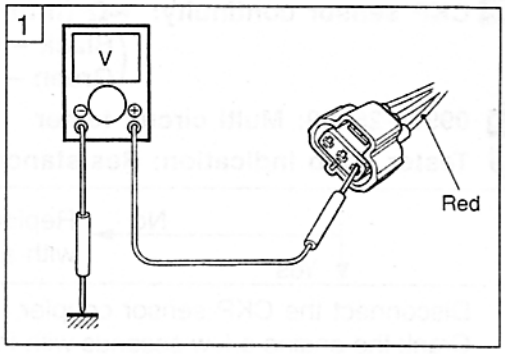

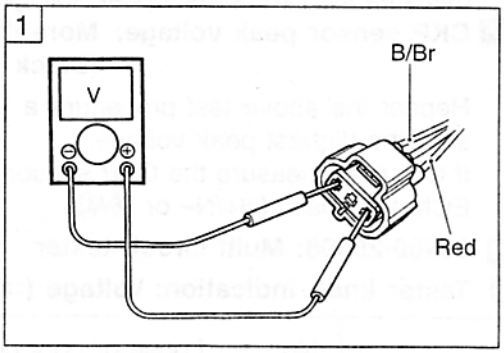

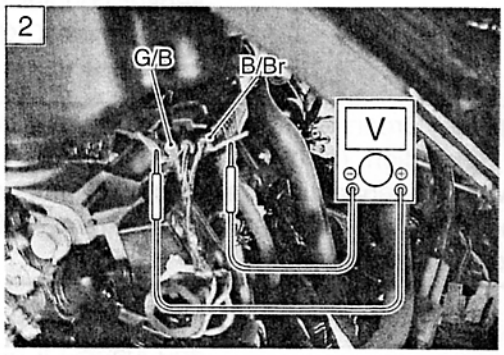

3 Remove the IAP sensor.
Connect the vacuum pump gauge to the vacuum port of the IAP sensor.
Arrange 3 new 1.5 V batteries in series (check that total voltage is 4.5 – 5.0 V) and connect ⊖ terminal to the ground terminal and ⊕ terminal to the Vcc terminal.
Check the voltage between Vout and ground. Also, check if voltage reduces when vacuum is applied up to 40 cmHg by using vacuum pump gauge. (See table below.)

TOOL **09917-47010: Vacuum pump gauge**
09900-25008: Multi circuit tester

Tester knob indication: Voltage (⎓)

No → If check result is not satisfactory, replace IAP sensor with a new one.

Yes ↓

Red, G/B or B/Br wire open or shorted to ground, or poor ㊽, ㊿ or ㊽ connection. (☞4-27)
If wire and connection are OK, intermittent trouble or faulty ECM. Recheck each terminal and wire harness for open circuit and poor connection. (☞4-4)

→ Replace the ECM with a new one, and inspect it again.

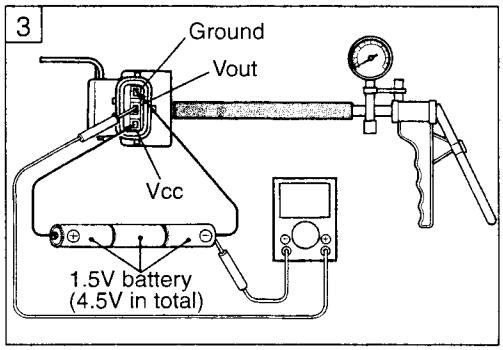

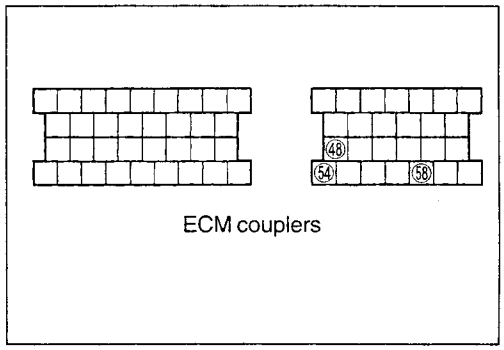

ECM couplers

Output voltage (Vcc voltage 4.5 – 5.0 V, ambient temp. 20 – 30°C, 68 – 86°F)

ALTITUDE (Reference)		ATMOSPHERIC PRESSURE		OUTPUT VOLTAGE
(ft)	(m)	(mmHg)	kPa	(V)
0 | 2 000	0 | 610	760 | 707	100 | 94	3.1 – 3.6
2 001 | 5 000	611 | 1 524	707 | 634	94 | 85	2.8 – 3.4
5 001 | 8 000	1 525 | 2 438	634 | 567	85 | 76	2.6 – 3.1
8 001 | 10 000	2 439 | 3 048	567 | 526	76 | 70	2.4 – 2.9

"C14" TP SENSOR CIRCUIT MALFUNCTION

DETECTED CONDITION	POSSIBLE CAUSE
Signal voltage low or high. Difference between actual throttle opening and opening calculated by ECM in larger than specified value. (0.2 V ≦ Sensor Voltage < 4.8 V without the above range.)	• TP sensor maladjusted. • TP sensor circuit open or short. • TP sensor malfunction. • ECM malfunction.

INSPECTION

- Lift and support the fuel tank with its prop stay. (☞4-56)

1 Turn the ignition switch OFF.
Check the TP sensor coupler for loose or poor contacts.
If OK, then measure the TP sensor input voltage.
Disconnect the TP sensor coupler (Black color).
Turn the ignition switch ON.
Measure the voltage at the Red wire and ground.
If OK, then measure the voltage at the Red wire and B/Br wire.

DATA **TPS sensor input voltage: 4.5 – 5.5 V**
(⊕Red – ⊖Ground
⊕Red – ⊖B/Br)

TOOL **09900-25008: Multi circuit tester**

Tester knob indication: Voltage (⎓)

No → Loose or poor contacts on the ECM coupler.
Open or short circuit in the Red wire or B/Br wire.

Yes ↓

2 Turn the ignition switch OFF.
Disconnect the TP sensor coupler (Black color).
Check the continuity between Yellow wire and ground.

DATA **TP sensor continuity: ∞Ω (Infinity)**
(Yellow wire – Ground)

If OK, then measure the TP sensor resistance at the coupler (between Yellow and Black wires).
Turn the throttle grip and measure the resistance.

DATA **TP sensor resistance**
Throttle valve is closed: Approx. 1.1 kΩ
Throttle valve is opened: Approx. 4.3 kΩ

TOOL **09900-25008: Multi circuit tester**

Tester knob indication: Resistance (Ω)

No → Reset the TP sensor position correctly.
Replace the TP sensor with a new one.

Yes ↓

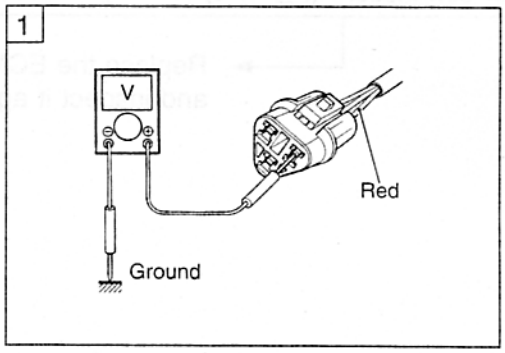

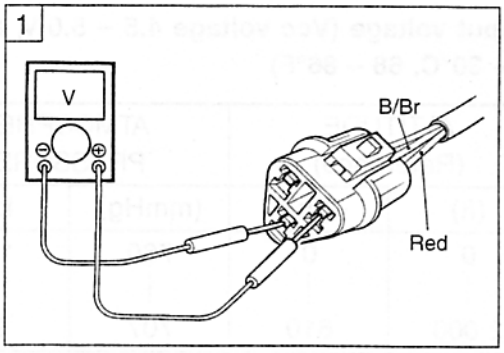

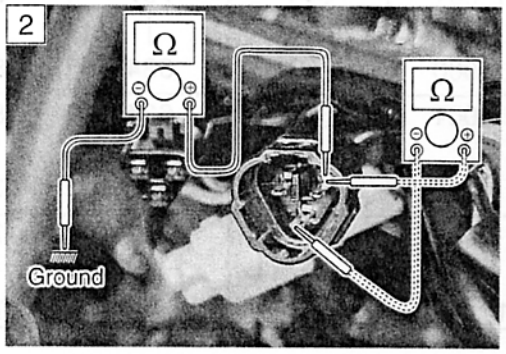

3 Connect the TP sensor coupler.
Insert the copper wires to the lead wire coupler.
Turn the ignition switch ON.
Measure the TP sensor output voltage at the coupler (between Yellow and Black wires) by turning the throttle grip.

DATA **TP sensor output voltage**
Throttle valve is closed: Approx. 1.1 V
Throttle valve is opened: Approx. 4.3 V

TOOL **09900-25008: Multi circuit tester**

Tester knob indication: Voltage (⎓)

No → If check result is not satisfactory, replace TP sensor with a new one.

Yes

Red, P/B or B/Br wire open or shorted to ground, or poor ㊽, ㊾ or ㊿ connection. (☞4-27)
If wire and connection are OK, intermittent trouble or faulty ECM.
Recheck each terminal and wire harness for open circuit and poor connection. (☞4-4)

→ Replace the ECM with a new one, and inspect it again.

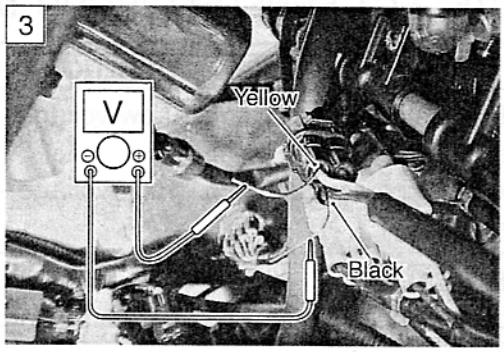

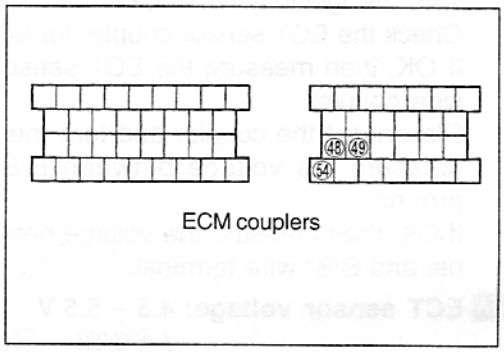

ECM couplers

"C15" ECT SENSOR CIRCUIT MALFUNCTION

DETECTED CONDITION	POSSIBLE CAUSE
High engine coolant temp. (Low voltage – Low resistance) Low engine coolant temp. (High voltage – High resistance)	• B/Bl circuit shorted to ground. • B/Br circuit open. • ECT sensor malfunction. • ECM malfunction.

INSPECTION

- Lift and support the fuel tank with its prop stay. (☞4-56)

1

Turn the ignition switch OFF.
Check the ECT sensor coupler for loose or poor contacts.
If OK, then measure the ECT sensor voltage at the wire side coupler.
Disconnect the coupler and turn the ignition switch ON.
Measure the voltage between B/Bl wire terminal and ground.
If OK, then measure the voltage between B/Bl wire terminal and B/Br wire terminal.

DATA **ECT sensor voltage: 4.5 – 5.5 V**
(⊕B/Bl – ⊖Ground
⊕B/Bl – ⊖B/Br)

TOOL **09900-25008: Multi circuit tester**
Tester knob indication: Voltage (⎓)

No → Loose or poor contacts on the ECM coupler.
Open or short circuit in the B/Bl wire or B/Br wire.

Yes ↓

2

Turn the ignition switch OFF.
Measure the ECT sensor resistance.

DATA **ECT sensor resistance: 2.3 – 2.6 kΩ at 20°C (68°F) (Terminal – Terminal)**

TOOL **09900-25008: Multi circuit tester**
Tester knob indication: Resistance (Ω)
Refer to page 5-8 for details.

No → Replace the ECT sensor with a new one.

Yes ↓

B/Bl or B/Br wire open or shorted to ground, or poor ⑤① or ⑤④ connection. (☞4-27)
If wire and connection are OK, intermittent trouble or faulty ECM.
Recheck each terminal and wire harness for open circuit and poor connection. (☞4-4)

→ Replace the ECM with a new one, and inspect it again.

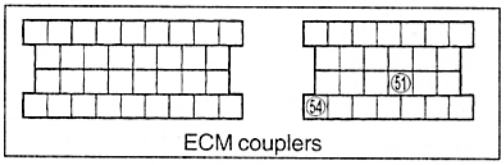

ECM couplers

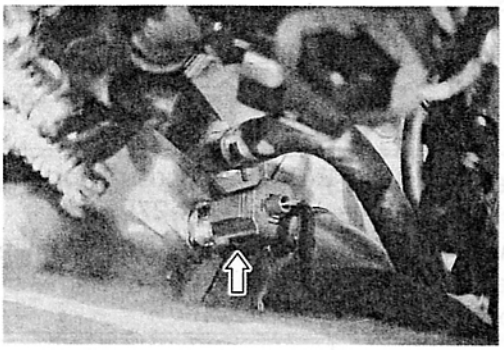

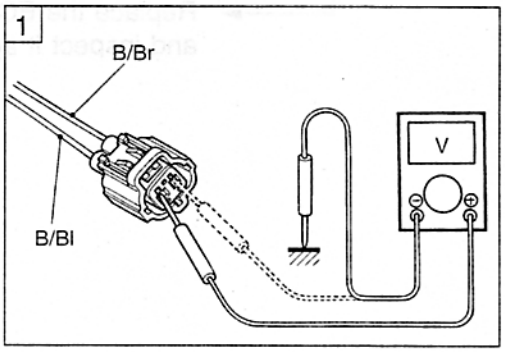

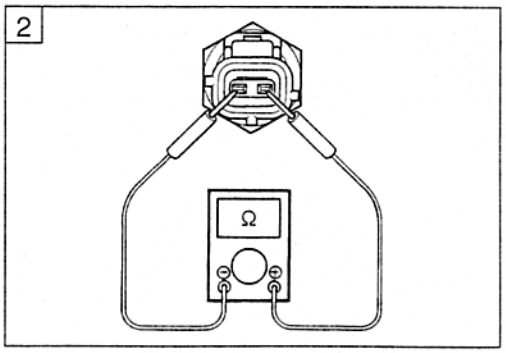

Engine Coolant Temp.	Resistance
20°C (68 °F)	Approx. 2.45 kΩ
50°C (122 °F)	Approx. 0.811 kΩ
80°C (176 °F)	Approx. 0.318 kΩ
110°C (230 °F)	Approx. 0.142 kΩ

"C21" IAT SENSOR CIRCUIT MALFUNCTION

DETECTED CONDITION	POSSIBLE CAUSE
High intake air temp. (Low voltage – Low resistance) Low intake air temp. (High voltage – High resistance)	• Dg circuit shorted to ground. • B/Br circuit open. • IAT sensor malfunction. • ECM malfunction.

INSPECTION

- Lift and support the fuel tank with its prop stay. (☞4-56)

1 Turn the ignition switch OFF.
Check the IAT sensor coupler for loose or poor contacts.
If OK, then measure the IAT sensor voltage at the wire side coupler.
Disconnect the coupler and turn the ignition switch ON.
Measure the voltage between Dg wire terminal and ground.
If OK, then measure the voltage between Dg wire terminal and B/Br wire terminal.

DATA **IAT sensor voltage: 4.5 – 5.5 V**
(⊕Dg – ⊖Ground
⊕Dg – ⊖B/Br)

TOOL **09900-25008: Multi circuit tester**
Tester knob indication: Voltage (⎓)

No → Loose or poor contacts on the ECM coupler.
Open or short circuit in the Dg wire or B/Br wire.

Yes ↓

2 Turn the ignition switch OFF.
Measure the IAT sensor resistance.

DATA **IAT sensor resistance: 2.2 – 2.7 kΩ at 20°C (68°F)**
(Terminal – Terminal)

TOOL **09900-25008: Multi circuit tester**
Tester knob indication: Resistance (Ω)

No → Replace the IAT sensor with a new one.

Yes ↓

Dg or B/Br wire open or shorted to ground, or poor ⑤⓪ or ⑤④ connection. (☞4-27)
If wire and connection are OK, intermittent trouble or faulty ECM.
Recheck each terminal and wire harness for open circuit and poor connection. (☞4-4)

→ Replace the ECM with a new one, and inspect it again.

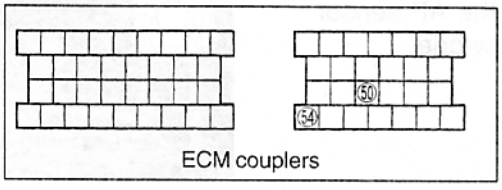

ECM couplers

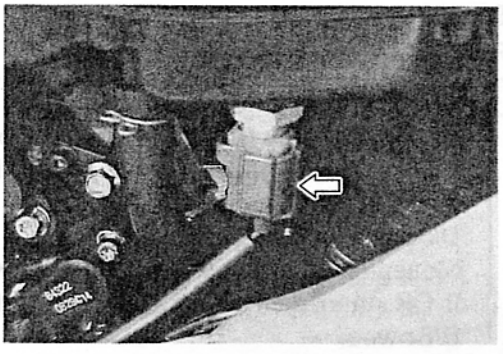

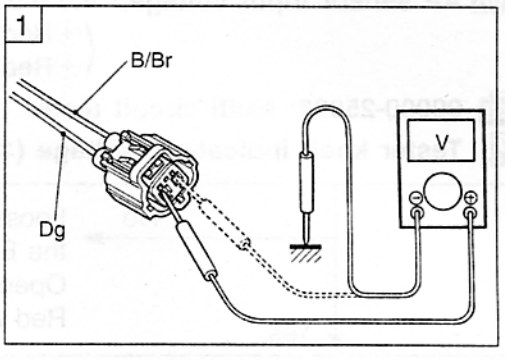

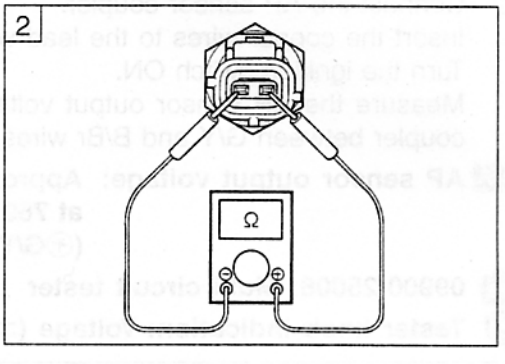

Intake Air Temp.	Resistance
20°C (68 °F)	Approx. 2.45 kΩ
50°C (122 °F)	Approx. 0.808 kΩ
80°C (176 °F)	Approx. 0.322 kΩ
110°C (230 °F)	Approx. 0.148 kΩ

NOTE:
IAT sensor resistance measurement method is the same way as that of the ECT sensor. Refer to page 5-8 for details.

"C22" AP SENSOR CIRCUIT MALFUNCTION

DETECTED CONDITION	POSSIBLE CAUSE
Low pressure and low voltage. High pressure and high voltage. (0.5 V ≦ Sensor Voltage < 4.85 V without the above range.) *NOTE:* *Note that atmospheric pressure varies depending on weather conditions as well as altitude.* *Take that into consideration when inspecting voltage.*	• Clogged air passage with dust. • Red wire circuit open or shorted to ground. • B/Br or G/Y wire circuit shorted to ground. • AP sensor malfunction. • ECM malfunction.

INSPECTION

- Remove the front seat. (☞6-6)

1 Turn the ignition switch OFF.
Check the AP sensor coupler for loose or poor contacts.
If OK, then measure the AP sensor input voltage.
Turn the ignition switch ON.
Disconnect the AP sensor coupler.
Measure the voltage between Red wire and ground.
If OK, then measure the voltage between Red wire and B/Br wire.

DATA **AP sensor input voltage: 4.5 – 5.5 V**
(⊕Red – ⊖Ground)
(⊕Red – ⊖B/Br)

TOOL **09900-25008: Multi circuit tester**
Tester knob indication: Voltage (⎓)

No → Loose or poor contacts on the ECM coupler.
Open or short circuit in the Red wire or B/Br wire.

Yes ↓

2 Connect the AP sensor coupler.
Insert the copper wires to the lead wire coupler.
Turn the ignition switch ON.
Measure the AP sensor output voltage at the wire side coupler between G/Y and B/Br wires.

DATA **AP sensor output voltage: Approx. 3.6 V**
at 760 mmHg (100 kPa)
(⊕G/Y – ⊖B/Br)

TOOL **09900-25008: Multi circuit tester**
Tester knob indication: Voltage (⎓)

No → Check the air passage for clogging.
Open or short circuit in the G/Y wire.
Replace the AP sensor with a new one.

Yes ↓

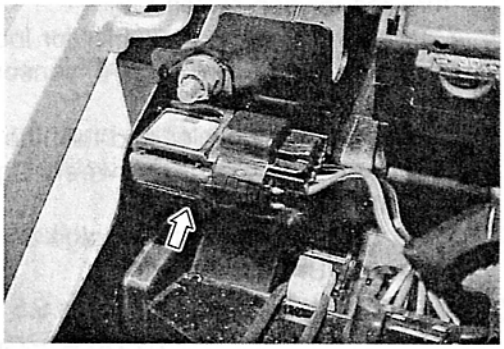

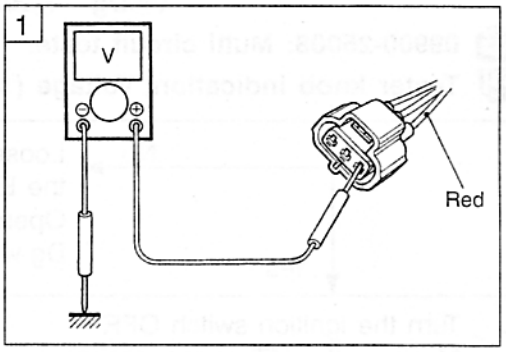

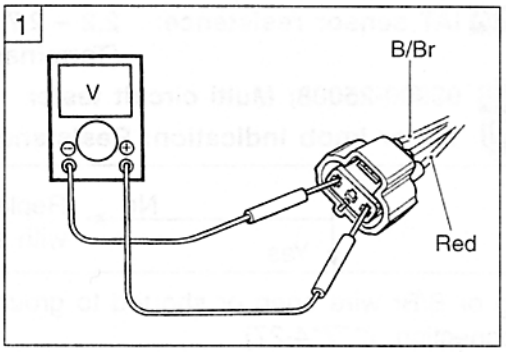

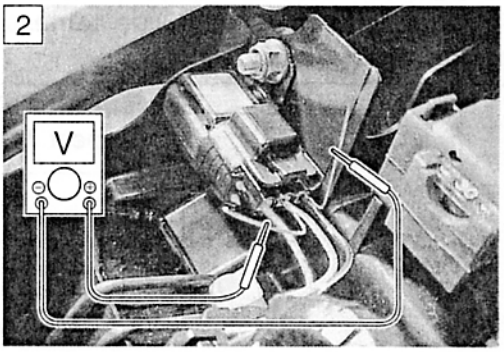

3 Remove the AP sensor.
Connect the vacuum pump gauge to the air passage port of the AP sensor.
Arrange 3 new 1.5 V batteries in series (check that total voltage is 4.5 – 5.0 V) and connect ⊖ terminal to the ground terminal and ⊕ terminal to the Vcc terminal.
Check the voltage between Vout and ground. Also, check if voltage reduces when vacuum is applied up to 40 cmHg by using vacuum pump gauge. (See table below)

09917-47010: Vacuum pump gauge
09900-25008: Multi circuit tester

Tester knob indication: Voltage (⎓)

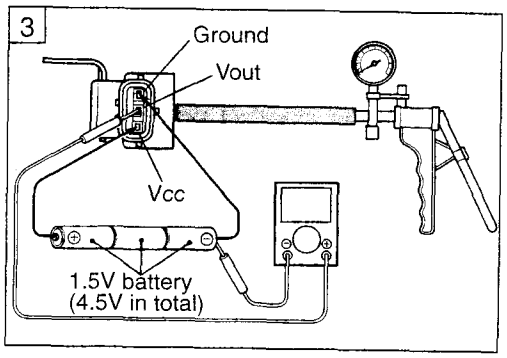

No → If check result is not satisfactory, replace AP sensor with a new one.

Yes

Red, G/Y or B/Br wire open or shorted to ground, or poor ㊽, ㊿ or ㊿ connection. (☞ 4-27)
If wire and connection are OK, intermittent trouble or faulty ECM.
Recheck each terminal and wire harness for open circuit and poor connection. (☞ 4-4)

→ Replace the ECM with a new one, and inspect it again.

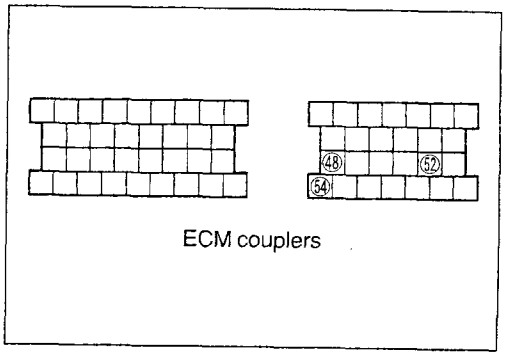

ECM couplers

Output voltage (Vcc voltage 4.5 – 5.0 V, ambient temp. 20 – 30°C, 68 – 86°F)

ALTITUDE (Reference)		ATMOSPHERIC PRESSURE		OUTPUT VOLTAGE
(ft)	(m)	(mmHg)	kPa	(V)
0 | 2 000	0 | 610	760 | 707	100 | 94	3.1 – 3.6
2 001 | 5 000	611 | 1 524	707 | 634	94 | 85	2.8 – 3.4
5 001 | 8 000	1 525 | 2 438	634 | 567	85 | 76	2.6 – 3.1
8 001 | 10 000	2 439 | 3 048	567 | 526	76 | 70	2.4 – 2.9

"C23" TO SENSOR CIRCUIT MALFUNCTION

DETECTED CONDITION	POSSIBLE CAUSE
No TO sensor signal for more than 2 seconds, after ignition switch turns ON. Sensor voltage high. (Sensor Voltage < 4.85 V without the above range.)	• TO sensor circuit open or short. • TO sensor malfunction. • ECM malfunction.

INSPECTION

• Lift and support the fuel tank with its prop stay. (☞ 4-56)

1 Turn the ignition switch OFF.
Check the TO sensor coupler for loose or poor contacts.
If OK, then measure the TO sensor resistance.
Disconnect the TO sensor coupler.
Measure the resistance between Black and B/W wire terminals.

DATA **TO sensor resistance: 60 – 64 kΩ (Black – B/W)**

TOOL **09900-25008: Multi circuit tester**

Tester knob indication: Resistance (Ω)

No → Replace the TO sensor with a new one.

Yes ↓

2 Connect the TO sensor coupler.
Insert the copper wires to the wire lead coupler.
Turn the ignition switch ON.
Measure the voltage at the wire side coupler between Black and B/Br wires.

DATA **TO sensor voltage: Approx. 2.5 V (Black – B/Br)**

Also, measure the voltage when leaning of the motorcycle.
Dismount the TO sensor from its bracket and measure the voltage when it is leaned more than 43°, left and right, from the horizontal level.

DATA **TO sensor voltage: 0 V (Black – B/Br)**

TOOL **09900-25008: Multi circuit tester**

Tester knob indication: Voltage (⎓)

No → Loose or poor contacts on the ECM coupler.
Open or short circuit in the Black wire or B/Br wire.
Replace the TO sensor with a new one.

Yes ↓

Black or B/Br wire open or shorted to ground, or poor ⑭ or ⑲ connection. (☞ 4-27)
If wire and connection are OK, intermittent trouble or faulty ECM.
Recheck each terminal and wire harness for open circuit and poor connection. (☞ 4-4)

→ Replace the ECM with a new one, and inspect it again.

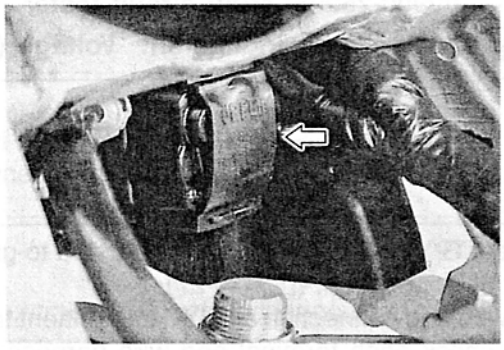

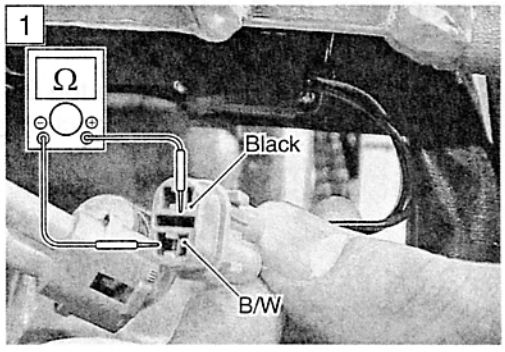

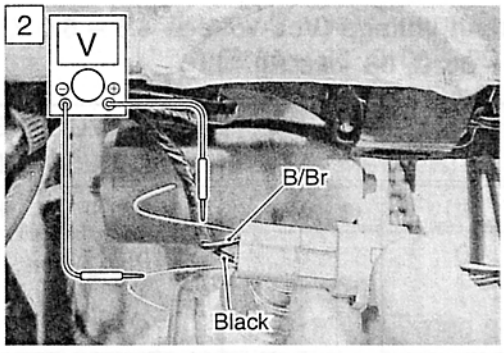

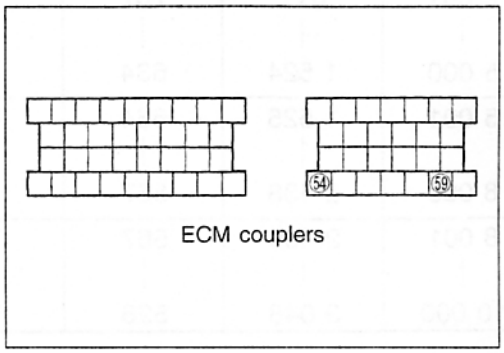

ECM couplers

"C24", "C25", "C26" or "C27" IGNITION SYSTEM MALFUNCTION

***Refer to the IGNITION SYSTEM for details. (☞7-17)**

"C28" STV ACTUATOR CIRCUIT MALFUNCTION

DETECTED CONDITION	POSSIBLE CAUSE
The operation voltage does not reach the STVA. ECM does not receive communication signal from the STVA.	• STVA malfunction. • STVA circuit open or short. • STVA motor malfunction.

INSPECTION

- Lift and support the fuel tank with its prop stay. (☞4-56)
- Remove the air cleaner element.

1 Turn the ignition switch OFF.
Check the STVA lead wire coupler for loose or poor contacts.
Turn the ignition switch ON to check the STVA operation.
(STV operating order: Full open → 20% open)

No → Loose or poor contacts on the STVA coupler.
Open or short circuit in the (Pink or Black) and (W/Bl or Green) wires.

Yes ↓

2 Turn the ignition switch OFF.
Disconnect the STVA lead wire coupler.
Check the continuity between each wire and ground.

DATA **STVA continuity: ∞Ω (Infinity)**
If OK, then measure the STVA resistance. (between Pink and Black wires) and (between W/B and Green wires)

DATA **STVA resistance: Approx. 6.5 Ω**
(⊕ Pink – ⊖ Black)
(⊕ W/B – ⊖ Green)

TOOL **09900-25008: Multi circuit tester**
Tester knob indication: Resistance (Ω)

No → Replace the STVA with a new one.

Yes ↓

Loose or poor contacts on the STVA coupler.
If wire and connection are OK, intermittent trouble or faulty ECM. Recheck each terminal and wire harness for open circuit and poor connection. (☞4-4)

→ Replace the ECM with new one, and inspect it again.

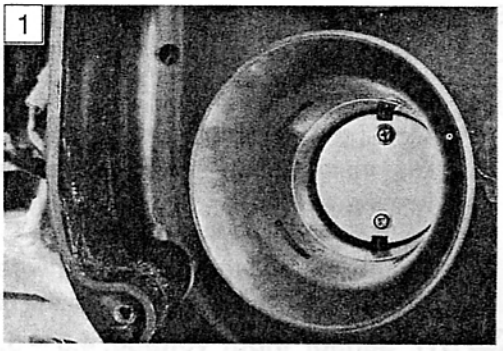

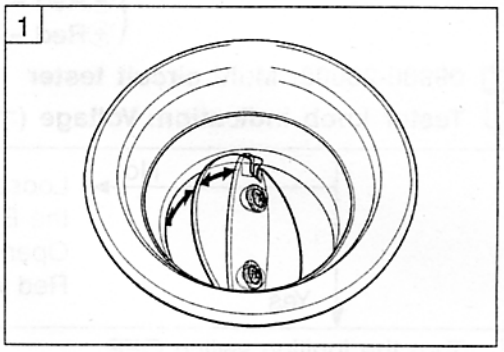

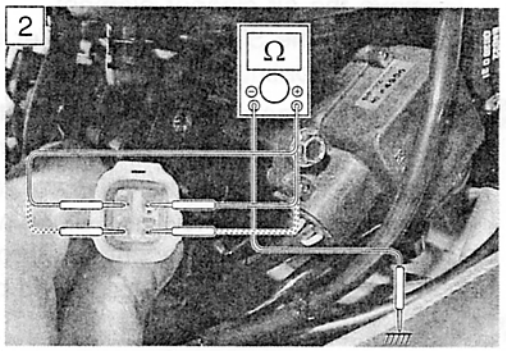

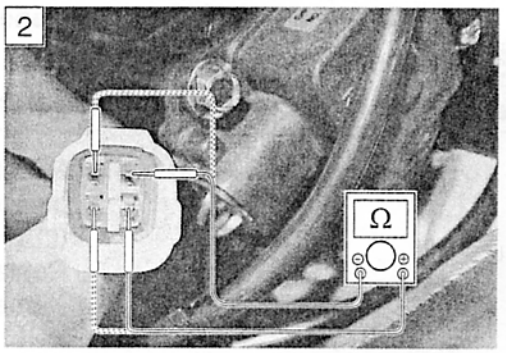

"C29" STP SENSOR CIRCUIT MALFUNCTION

DETECTED CONDITION	POSSIBLE CAUSE
Signal voltage low or high. Difference between actual throttle opening and opening calculated by ECM in larger than specified value. (0.2 V ≦ Sensor Voltage < 4.8 V without the above range.)	• STP sensor maladjusted. • STP sensor circuit open or short. • STP sensor malfunction. • ECM malfunction.

INSPECTION

• Lift and support the fuel tank with its prop stay. (☞ 4-56)

1 Turn the ignition switch OFF.
Check the STP sensor coupler for loose or poor contacts.
If OK, then measure the STP sensor input voltage.
Disconnect the STP sensor coupler (White color).
Turn the ignition switch ON.
Measure the voltage at the Red wire and ground.
If OK, then measure the voltage at the Red wire and B/Br wire.

DATA **STP sensor input voltage: 4.5 – 5.5 V**
(⊕Red – ⊖Ground / ⊕Red – ⊖B/Br)

TOOL **09900-25008: Multi circuit tester**

Tester knob indication: Voltage (⎓)

No → Loose or poor contacts on the ECM coupler.
Open or short circuit in the Red wire or B/Br wire.

Yes

2 Turn the ignition switch OFF.
Remove the air cleaner element.
Disconnect the STP sensor coupler (White color).
Check the continuity between Yellow wire and ground.

DATA **STP sensor continuity: ∞Ω (Infinity)**
(Yellow wire – Ground)

If OK, then measure the STP sensor resistance at the coupler (between Yellow and Black wires).
Close and open the secondary throttle valve by finger, and measure the valve closing and opening resistance.

DATA **STP sensor resistance**
Secondary throttle valve is closed: Approx. 0.5 kΩ
Secondary throttle valve is opened: Approx. 3.9 kΩ

TOOL **09900-25008: Multi circuit tester**

Tester knob indication: Resistance (Ω)

No → Reset the STP sensor position correctly. (☞ 4-73)
Replace the STP sensor with a new one.

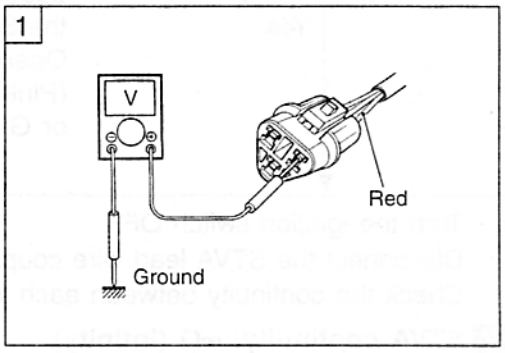

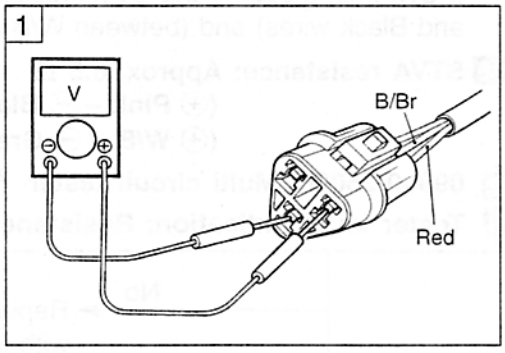

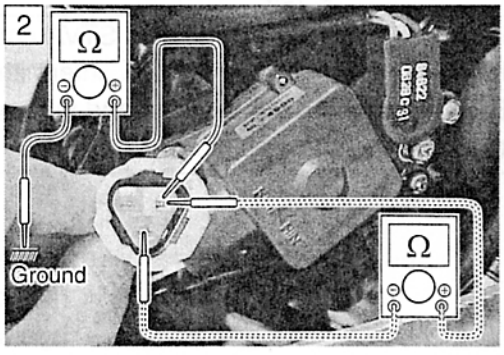

2

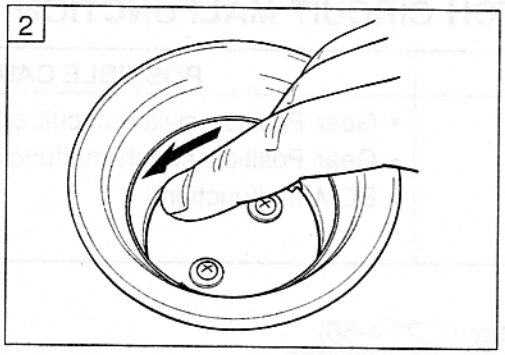

2

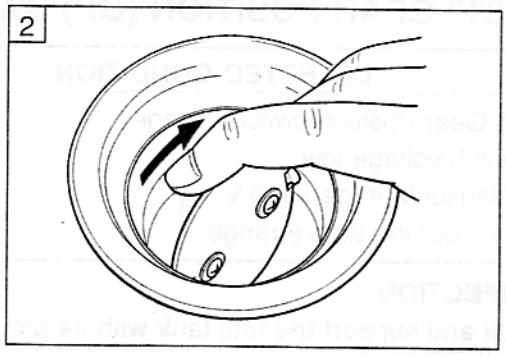

Yes

3

Turn the ignision switch OFF.
Connect the STP sensor coupler.
Insert the copper wires to the lead wire coupler.
Disconnect the STVA lead wire coupler.
Turn the ignition switch ON.
Measure the STP sensor output voltage at the coupler (between Yellow and Black wires) by turning the secondary throttle valve (close and open) with a finger.

DATA **STP sensor output voltage**
Throttle valve is closed: Approx. 0.5 V
Throttle valve is opened: Approx. 3.7 V

TOOL **09900-25008: Multi circuit tester**

Tester knob indication: Voltage (⎓)

3

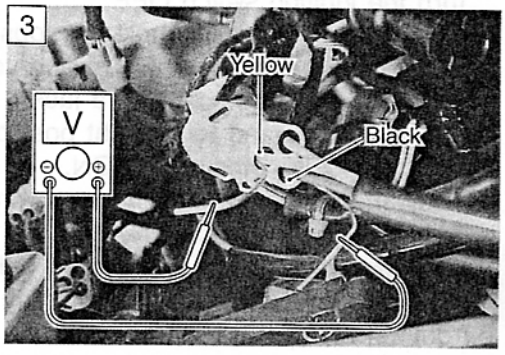

No → If check result is not satisfactory, replace STP sensor with a new one.

Yes

Blue, Yellow or Black wire open or shorted to ground, or poor ㊺ connection. (☞ 4-27)
If wire and connection are OK, intermittent trouble or faulty ECM.
Recheck each terminal and wire harness for open circuit and poor connection. (☞ 4-4)

3

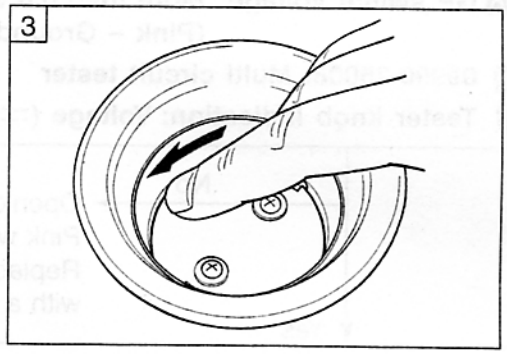

→ Replace the ECM with a new one, and inspect it again.

3

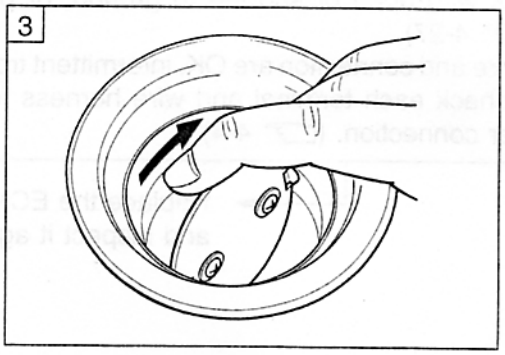

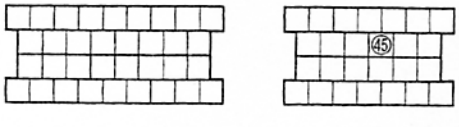

ECM couplers

"C31" GEAR POSITION (GP) SWITCH CIRCUIT MALFUNCTION

DETECTED CONDITION	POSSIBLE CAUSE
No Gear Position switch voltage Switch voltage low. (Sensor Voltage > 0.6 V without the above range.)	• Gear Position switch circuit open or short. • Gear Position switch malfunction. • ECM malfunction.

INSPECTION

• Lift and support the fuel tank with its prop stay. (☞ 4-56)

1 Turn the ignition switch OFF.
Check the GP switch coupler for loose or poor contacts.
If OK, then measure the GP switch voltage.
Support the motorcycle with a jack.
Turn the side-stand to up-right position.
Turn the engine stop switch ON.
Insert the copper wire to the lead wire coupler.
Turn the ignition switch ON.
Measure the voltage at the wire side coupler between Pink wire and ground, when shifting the gearshift lever from 1st to Top.

DATA **GP switch voltage: More than 0.6 V (Pink – Ground)**

TOOL **09900-25008: Multi circuit tester**

Tester knob indication: Voltage (⎓)

No → Open or short circuit in the Pink wire.
Replace the GP switch with a new one.

Yes

Pink wire open or shorted to ground, or poor ⑤⑦ connection. (☞ 4-27)
If wire and connection are OK, intermittent trouble or faulty ECM.
Recheck each terminal and wire harness for open circuit and poor connection. (☞ 4-4)

→ Replace the ECM with a new one, and inspect it again.

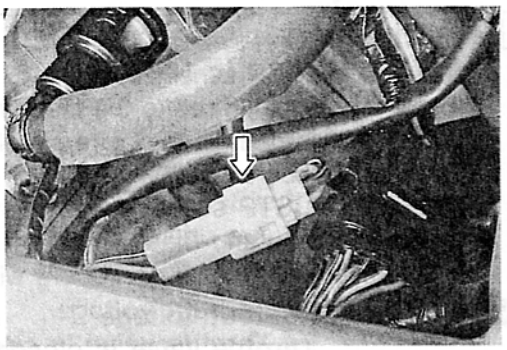

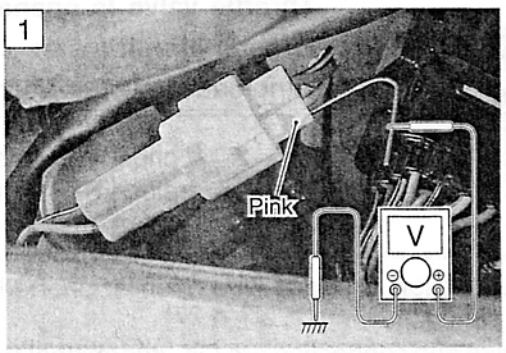

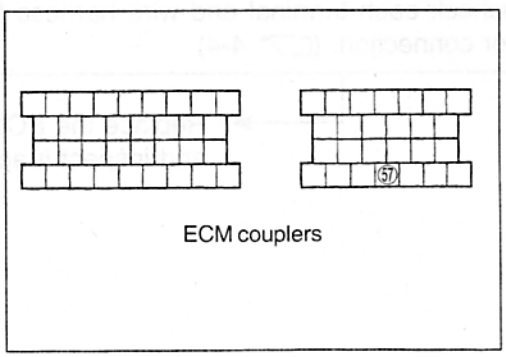

ECM couplers

"C32", "C33", "C34" or "C35" FUEL INJECTION MALFUNCTION

DETECTED CONDITION	POSSIBLE CAUSE
No injector current.	• Injector circuit open or short. • Injector malfunction. • ECM malfunction.

INSPECTION

• Lift and support the fuel tank with its prop stay. (☞ 4-56)

1 Turn the ignition switch OFF.
Check the injector coupler for loose or poor contacts.
If OK, then measure the injector resistance.
Disconnect the coupler and measure the resistance between terminals.

DATA **Injector resistance: 11 – 16 Ω at 20°C (68°F)**
(Terminal – Terminal)

If OK, then check the continuity between each terminal and ground.

DATA **Injector continuity: ∞Ω (Infinity)**
(Terminal – Ground)

TOOL **09900-25008: Multi circuit tester**

Tester knob indication: Resistance (Ω)

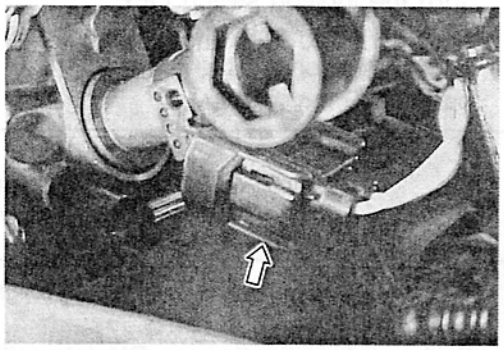

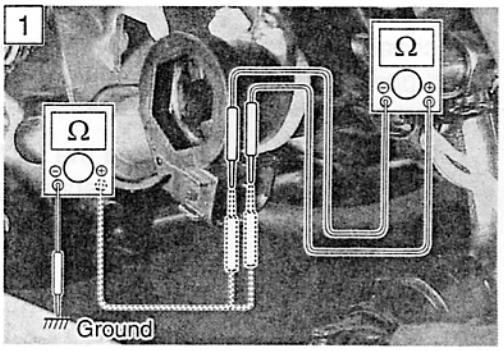

No → Replace the injector with a new one. (☞ 4-68 and -71)

Yes ↓

2 Turn the ignition switch ON.
Measure the injector voltage between Y/R wire and ground.

DATA **Injector voltage: Battery voltage**
(Y/R – Ground)

NOTE:
Injector voltage can be detected only 3 seconds after ignition switch is turned ON.

TOOL **09900-25008: Multi circuit tester**

Tester knob indication: Voltage (⎓)

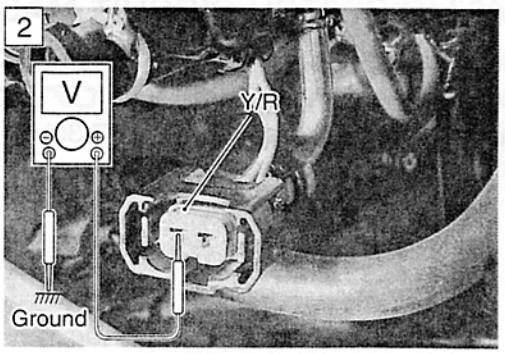

No → Open circuit in the Yellow/Red wire.

Yes ↓

Gr/W, Gr/B, Gr/Y, Gr/R or Y/R wire open or shorted to ground, or poor ④, ⑤, ⑥, ⑦ or ㊷ connection. (☞ 4-27)
If wire and connection are OK, intermittent trouble or faulty ECM.
Recheck each terminal and wire harness for open circuit and poor connection. (☞ 4-4)

→ Replace the ECM with a new one, and inspect it again.

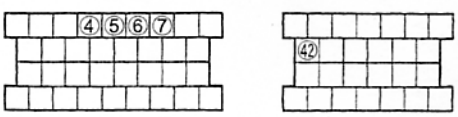

ECM couplers

"C41" FP RELAY CIRCUIT MALFUNCTION

DETECTED CONDITION	POSSIBLE CAUSE
No signal from fuel pump relay.	• Fuel pump relay circuit open or short. • Fuel pump relay malfunction. • ECM malfunction.

INSPECTION

- Remove the front seat.
- Lift and support the fuel tank with its prop stay. (☞4-56)

1 Turn the ignition switch OFF.
Check the FP relay coupler for loose or poor contacts.
If OK, then check the insulation and continuity. Refer to page 4-60 for details.

No → Replace the FP relay with a new one.

Yes ↓

Y/B or O/W wire open or shorted to ground, or poor ⑨ or ⑰ connection. (☞ 4-27)
If wire and connection are OK, intermittent trouble or faulty ECM.
Recheck each terminal and wire harness for open circuit and poor connection. (☞ 4-4)

→ Replace the ECM with a new one, and inspect it again.

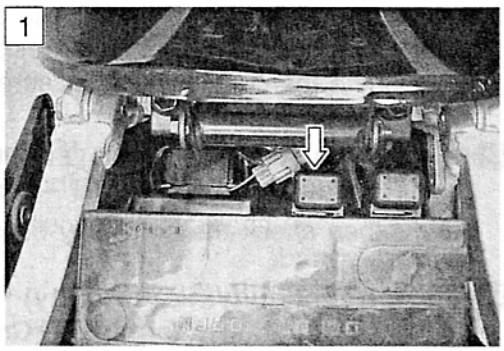

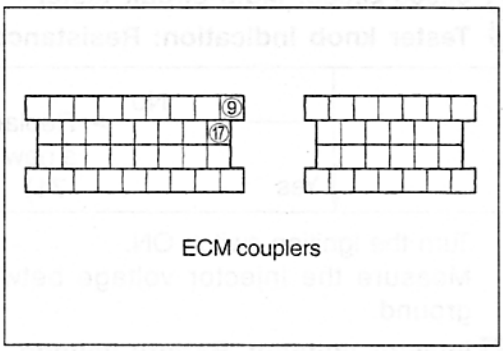

ECM couplers

"C42" IG SWITCH CIRCUIT MALFUNCTION

*** Refer to the IGNITION SWITCH INSPECTION for details.**

- Remove the right under cowling. (☞ 6-3)
- Inspect the ignition switch. (☞ 7-30)

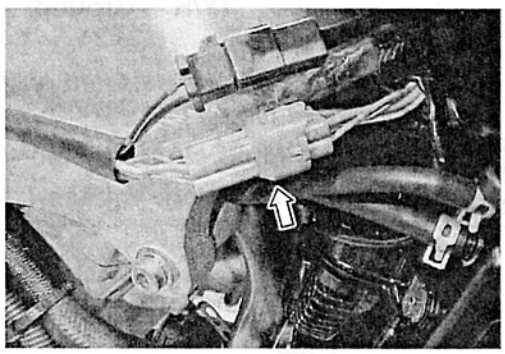

"C46" EXCV ACTUATOR CIRCUIT MALFUNCTION

DETECTED CONDITION	POSSIBLE CAUSE
The operation signal does not reach the EXCV actuator. EXCVA position sensor voltage low or high. (0.2 ≦ Sensor Voltage ≦ 4.8 V without the above range.)	• EXCVA maladjusted. • EXCVA circuit open or short. • EXCVA motor malfunction. • EXCVA position sensor malfunction.

INSPECTION

• Lift and support the fuel tank with its prop stay. (☞4-56)

1 Turn the ignition switch OFF.
Check the EXCVA lead wire coupler for loose or poor contacts.
Turn the ignition switch ON.
Check the operation of the EXCVA.

No → To 2-B (☞4-55)

Yes

2-A Check the installation of EXCV cables. (☞4-81)
If it is necessary, adjust the EXCV cables. (☞4-81 and-82)
If C46 code is indicated after adjusting the cable, perform the section 3-A.

3-A Turn the ignition switch OFF.
Disconnect the EXCVA position sensor lead wire coupler ①.
Turn the ignition switch ON.
Measure the voltage between the Red wire terminal and ground.
If OK, then measure the voltage between the Red wire terminal and B/Br wire terminal.

DATA **Position sensor input voltage: 4.5 – 5.5 V**
(⊕ Red – ⊖ Ground
⊕ Red – ⊖ B/Br)

TOOL **09900-25008: Multi circuit tester**
Tester knob indication: Voltage (⎓)

No → Loose or poor contacts on the ECM coupler.
Open or short circuit in the Red wire or B/Br wire.

Yes

To 4-A (☞Next page)

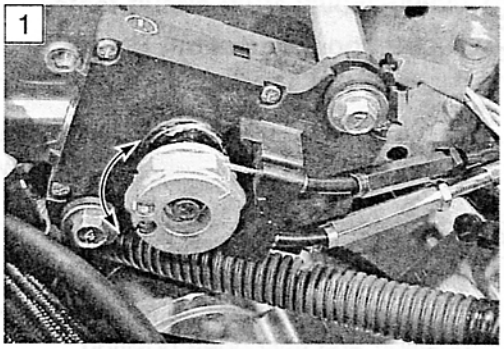

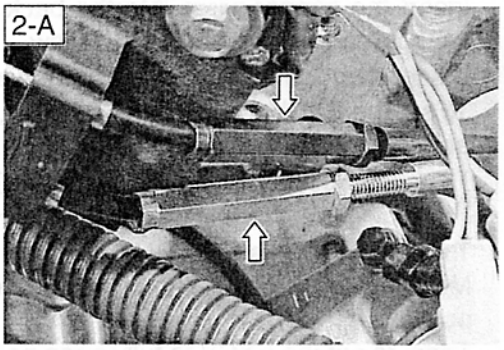

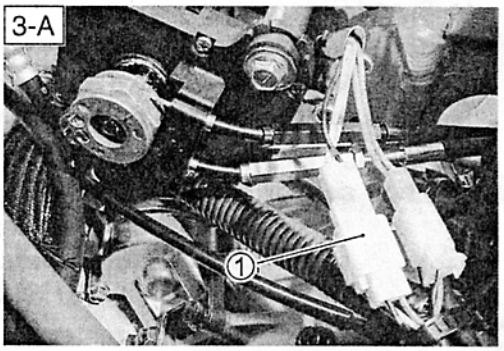

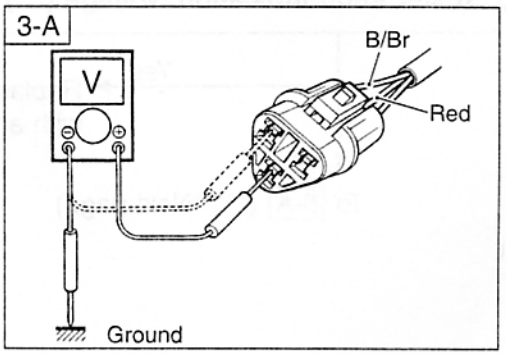

4-A Turn the ignition switch OFF.
Check the continuity between Yellow wire and ground.

DATA **Position sensor continuity: ∞Ω (Infinity)**

If OK, then measure the position sensor resistance.
Connect the position sensor coupler ①.
Set the EXCVA to adjustment position. (☞4-79)
Disconnect the position sensor coupler ① and measure the resistence. (between Yellow and White wires)

DATA **Position sensor resistance at adjustment position: Approx. 3.1 kΩ (⊕ Yellow – ⊖ White)**

TOOL **09900-25008: Multi circuit tester**

Tester knob indication: Resistance (Ω)

No → Replace the EXCVA with a new one.

Yes ↓

5-A Turn the ignition switch OFF.
Connect the position sensor coupler.
Measure the position sensor output voltage at fully close position and fully open position.
Insert the copper wires into the back side of the position sensor lead wire coupler. (⊕ Yellow – ⊖ White)
Disconnect the EXCVA motor lead wire coupler ②.
To set the EXCV to fully close position, apply 12 volts to Ⓐ and Ⓑ terminals.
Positive wire – Ⓐ (Pink wire) terminal
Negative wire – Ⓑ (Gray wire) terminal
Turn the ignition switch ON.
Measure the position sensor output voltage at fully close position.
Then, to set the EXCV to fully open position, apply 12 volts to Ⓑ and Ⓐ terminals.
Positive wire – Ⓑ (Gray wire) terminal
Negative wire – Ⓐ (Pink wire) terminal
Measure the position sensor output voltage at fully open position.

DATA **Position sensor output voltage**
EXCV is fully close: more than 0.2 V
EXCV is fully open: less than 4.8 V
(⊕ Yellow – ⊖ White)

TOOL **09900-25008: Multi circuit tester**

Tester knob indication: Voltage (⎓)

Yes → Replace the ECM with a new one.

No ↓

To 6-A (☞Next page)

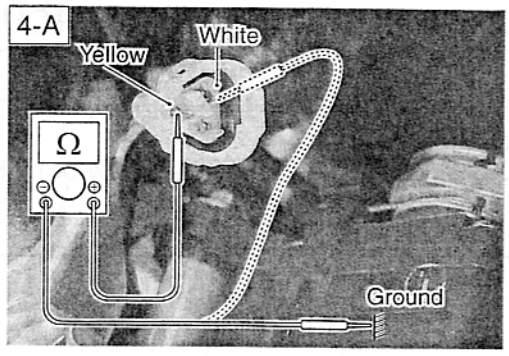

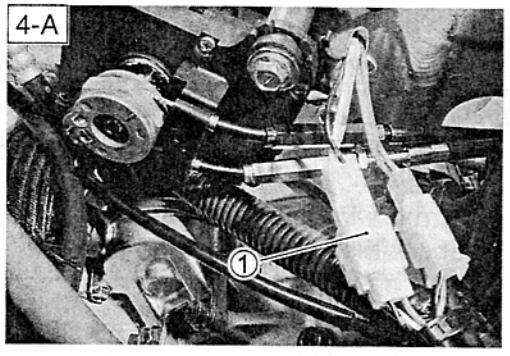

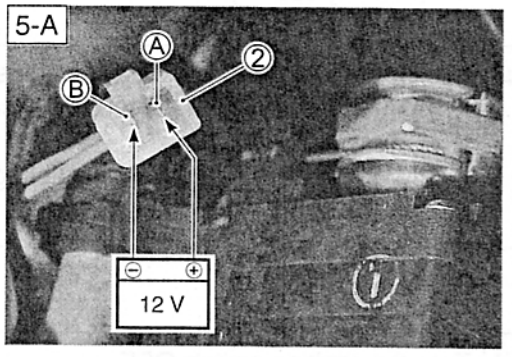

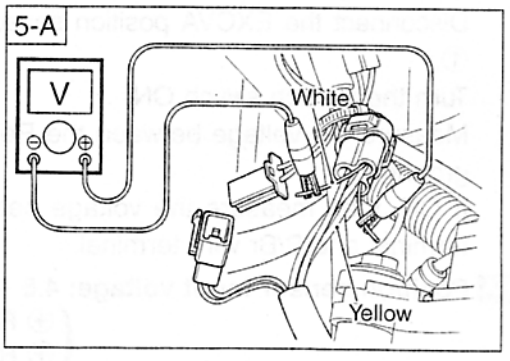

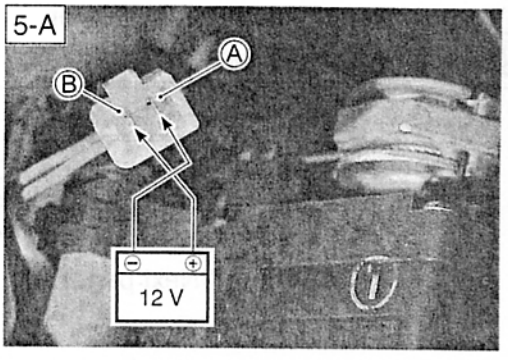

6-A If the position sensor output voltage is less than 0.2 V at fully close position, adjust the output voltage to specified by turning out the No.1 cable adjuster ①.
Repeat the above procedure (5-A) until the out put voltage becomes specified value. (If C46 code is indicated after adjusting the voltage, increase the voltage to 0.4 V.)

⚠ CAUTION

Adjusting the cable with the EXCV fully opened or fully closed can damage the EXCVA. Be sure to adjust the cable with the EXCV set in adjustment position.

If the position sensor output voltage is more than 4.8 V at fully open position, adjust the output voltage to specified by turning out the No.2 cable adjuster ②.
Repeat the above procedure (5-A) until the output voltage is within the specified value.

DATA Position sensor output voltage
EXCV is fully close: 0.2 ≦ Output Voltage ≦ 0.8
EXCV is fully open: 4.2 ≦ Output Voltage ≦ 4.8

No → Replace the EXCVA with a new one.
Yes → Replace the ECM with a new one

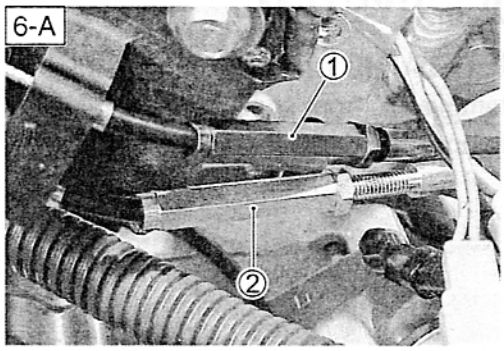

2-B Turn the ignition switch OFF.
Disconnect the motor lead wire coupler ① of the EXCVA.
Apply 12 volts to the terminal and check the operation of EXCVA.
Then, swap the wires supplied 12 volts and check the operation of EXCVA.
(Check the operation of EXCVA both way)

No → Replace the EXCVA with a new one.
Yes → Loose or poor contacts on the EXCVA or ECM coupler.

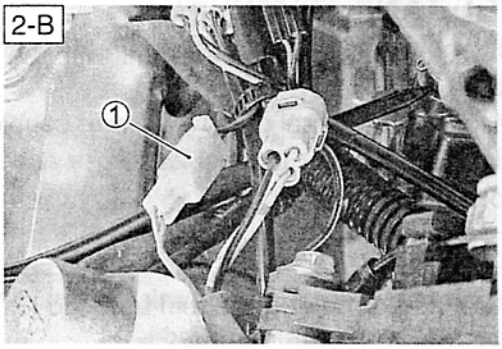

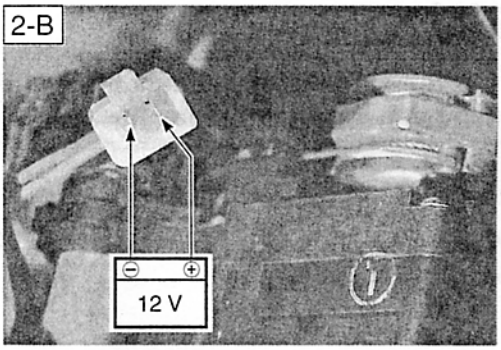

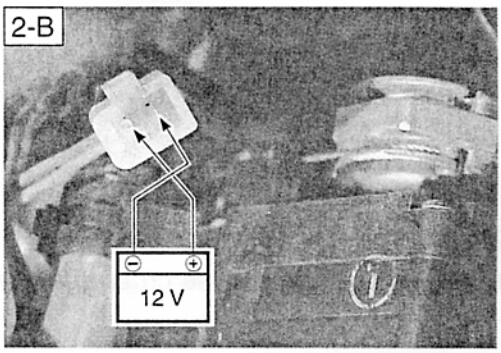

FUEL SYSTEM

FUEL TANK LIFT-UP

- Remove the front seat.
- Remove the fuel tank mounting bolts.

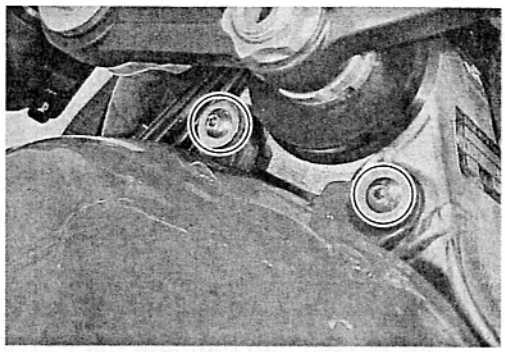

- Lift and support the fuel tank with the fuel tank prop stay ①.

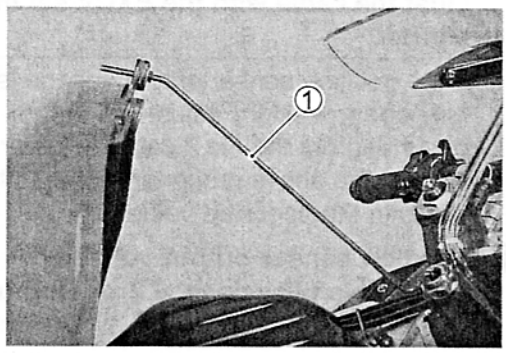

FUEL TANK REMOVAL

- Lift and support the fuel tank with the fuel tank prop stay. (See above)
- Disconnect the fuel pump lead wire coupler ①.
- Place a rag under the fuel feed hose and remove the fuel feed hose ②.

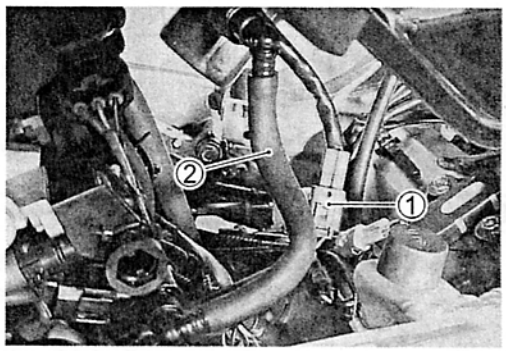

⚠ CAUTION

When removing the fuel tank, do not remain the fuel feed hose ② at the fuel tank side.

⚠ WARNING

Gasoline is highly flammable and explosive.
Keep heat, spark and flame away.

- Remove the fuel tank bracket mounting bolts.
- Remove the fuel tank.

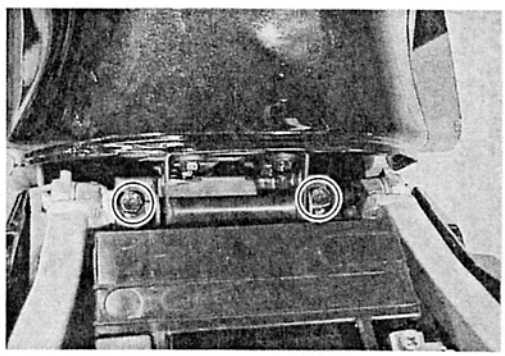

FUEL TANK INSTALLATION

- Installation is in the reverse order of removal.

FUEL PRESSURE INSPECTION

- Lift and support the fuel tank with its prop stay. (☞4-56)
- Place a rag under the fuel feed hose. (☞4-56)
- Remove the fuel feed hose and install the special tools between the fuel tank and fuel delivery pipe.

TOOL **09940-40211: Fuel pressure gauge adaptor**
09940-40220: Fuel pressure gauge hose attachment
09915-77330: Oil pressure gauge
09915-74520: Oil pressure gauge hose

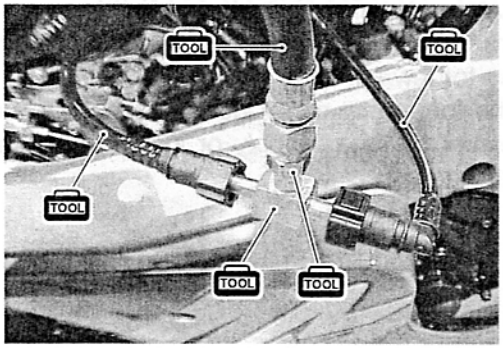

Turn the ignition switch ON and check the fuel pressure.

DATA **Fuel pressure: Approx. 300 kPa (3.0 kgf/cm², 43 psi)**

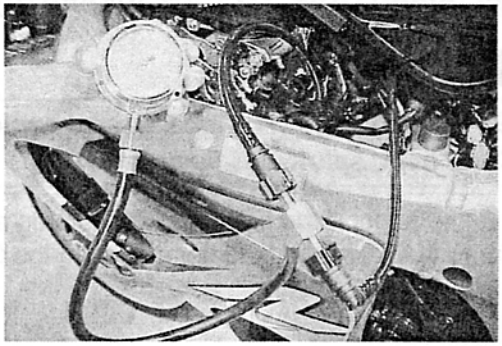

If the fuel pressure is lower than the specified, inspect the following items:

* Fuel hose leakage
* Clogged fuel filter
* Pressure regulator
* Fuel pump

If the fuel pressure is higher than the specified, inspect the following items:

* Fuel pump check valve
* Pressure regulator

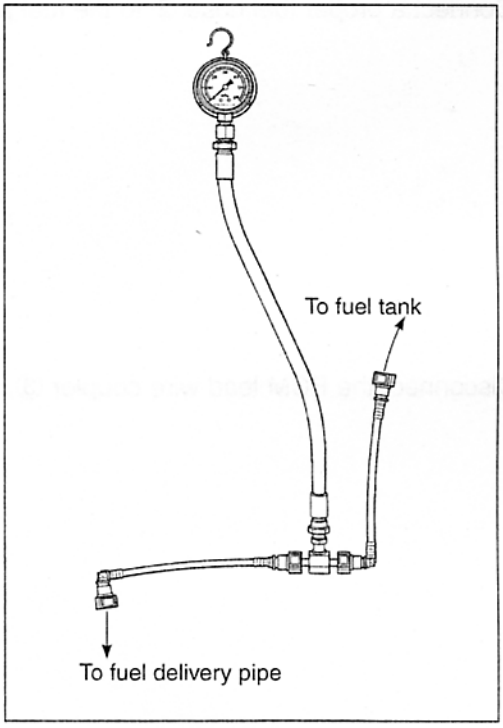

⚠ WARNING

* **Before removing the special tools, turn the ignition switch OFF position and release the fuel pressure slowly.**
* **Gasoline is highly flammable and explosive. Keep heat, sparks and flame away.**

FUEL PUMP INSPECTION

Turn the ignition switch ON and check that the fuel pump operates for few seconds.
If the fuel pump motor does not make operating sound, replace the fuel pump assembly or inspect the fuel pump relay and tip over sensor.

FUEL DISCHARGE AMOUNT INSPECTION

⚠ WARNING

Gasoline is highly flammable and explosive.
Keep heat, spark and flame away.

- Lift and support the fuel tank with its prop stay. (☞4-56)
- Disconnect the fuel feed hose ① from the fuel pump.

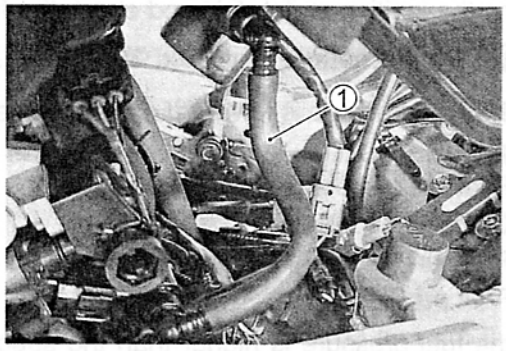

- Connect a proper fuel hose ② to the fuel pump.

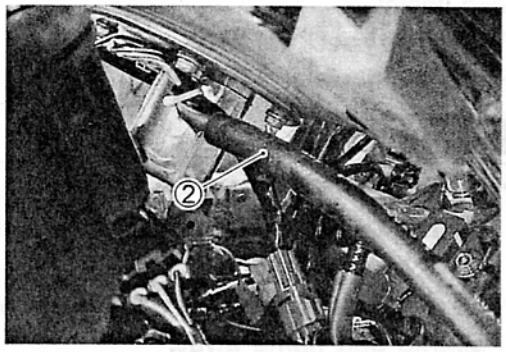

- Disconnect the ECM lead wire coupler ③.

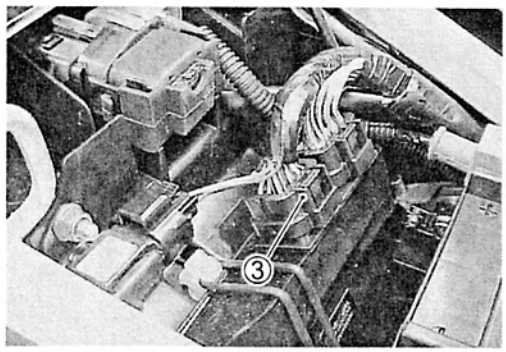

- Push the lock Ⓐ to pull out the power source lead wire (Yellow with red tracer ㊷).

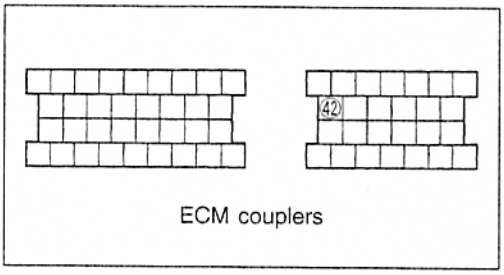

ECM couplers

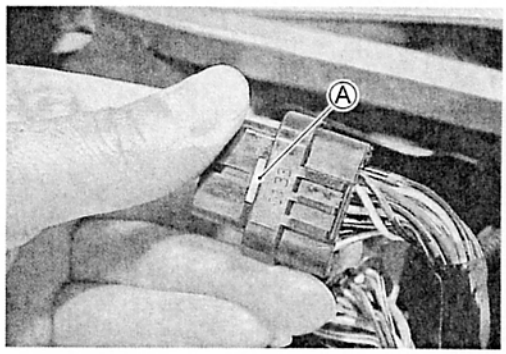

- Place the measuring cylinder and insert the fuel hose end into the measuring cylinder.

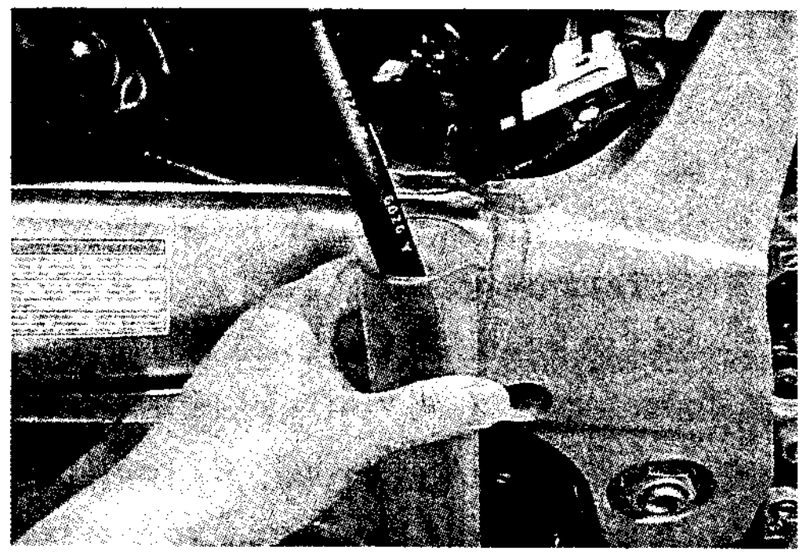

- Apply 12 volts to the fuel pump for 30 seconds and measure the amount of fuel discharged.
  Battery ⊕ terminal —— Power source lead wire ①
  (Yellow with red tracer)

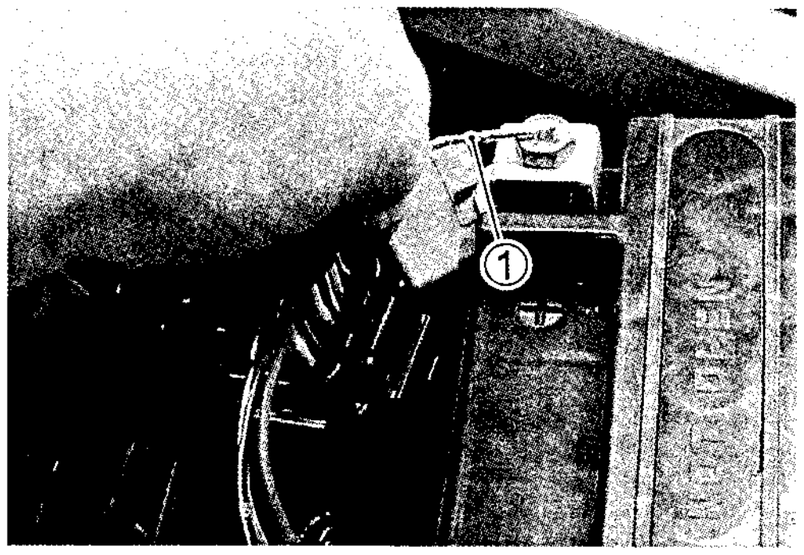

If the discharge amount is not specified it means that the fuel pump is defective or that the fuel filter is clogged.

DATA **Fuel discharge amount: Approx. 1 200 ml/30 sec.**
(1.3/1.1 US/Imp oz)/30 sec.

NOTE:
The battery must be in fully charged condition.

FUEL PUMP RELAY INSPECTION

Fuel pump relay is located in ahead of the battery.

- Remove the front and rear seats.
- Lift and support the fuel tank with its prop stay. (☞4-56)
- Remove the fuel pump relay.

First, check the insulation between ① and ② terminals with pocket tester. Then apply 12 volts to ③ and ④ terminals, ⊕ to ③ and ⊖ to ④, and check the continuity between ① and ②.
If there is no continuity, replace it with a new one.

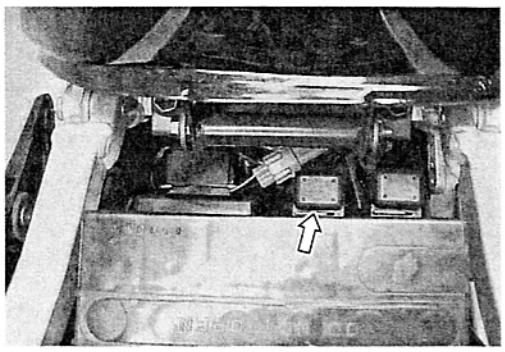

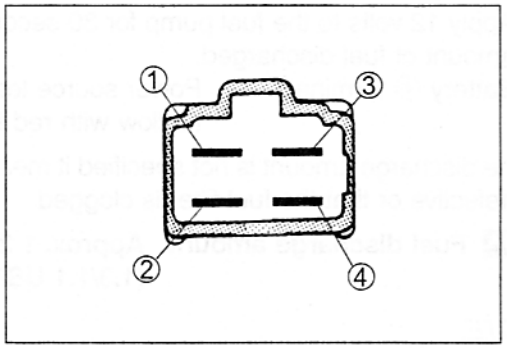

FUEL PUMP AND FUEL FILTER REMOVAL

CONSTRUCTION

ITEM	N·m	kgf·m	lb-ft
Ⓐ	10	1.0	7.0

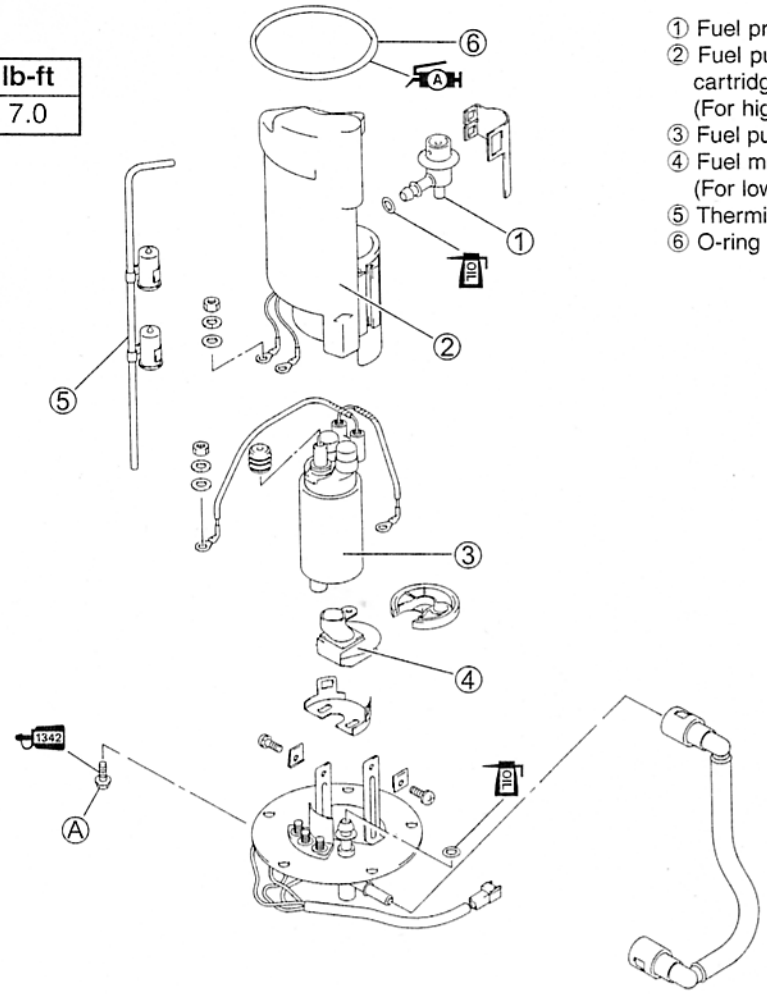

① Fuel pressure regulator
② Fuel pump case/Fuel filter cartridge (For high pressure)
③ Fuel pump
④ Fuel mesh filter (For low pressure)
⑤ Thermistor
⑥ O-ring

REMOVAL

- Remove the fuel tank. (☞4-56)
- Remove the fuel pump assembly by removing its mounting bolts diagonally.

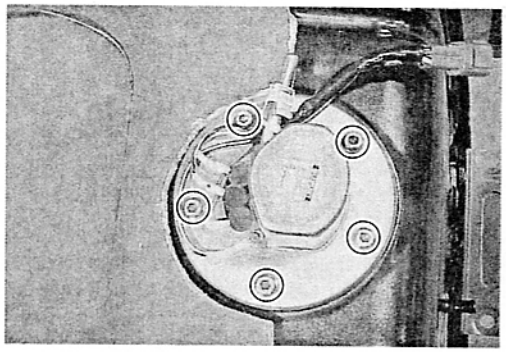

⚠ WARNING

Gasoline is highly flammable and explosive.
Keep heat, spark and flame away.

- Remove the nuts.

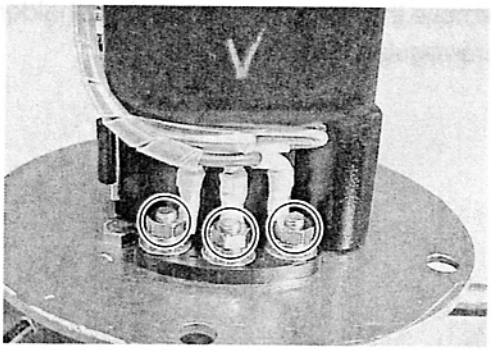

- Remove the screws.

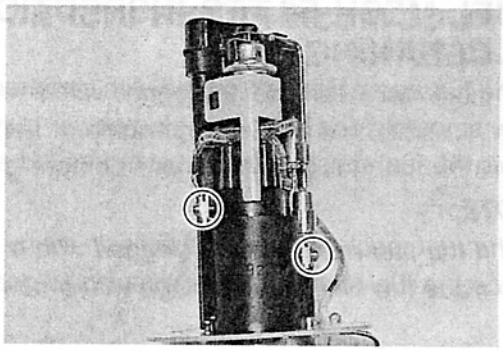

- Remove the fuel pump assy from the fuel pump plate.

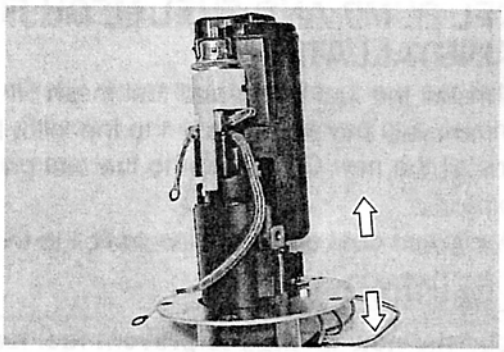

- Remove the fuel pump holder ①.

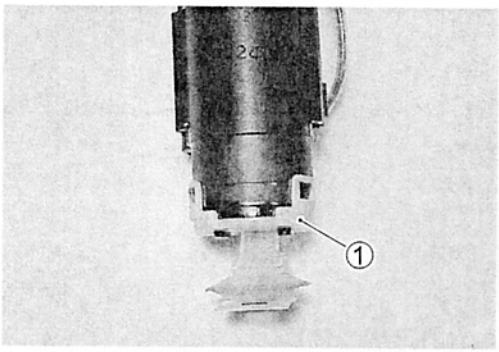

- Remove the fuel mesh filter.

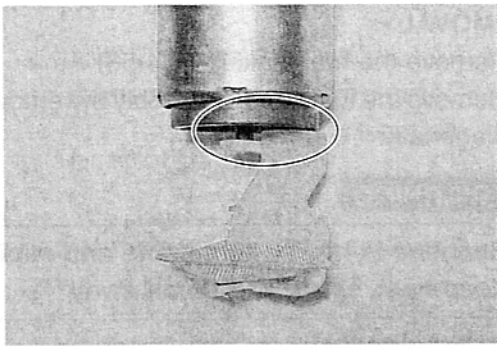

- Remove the fuel pressure regulator holder ① and the fuel pressure regulator ②.

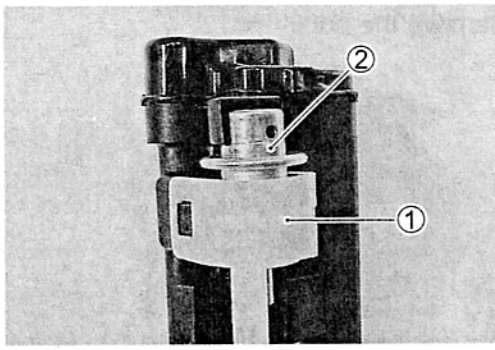

FUEL MESH FILTER INSPECTION AND CLEANING

If the fuel mesh filter is clogged with sediment or rust, fuel will not flow smoothly and loss in engine power may result.
Blow the fuel mesh filter with compressed air.

NOTE:
If the fuel mesh filter is clogged with many sediment or rust, replace the fuel filter cartridge with a new one.

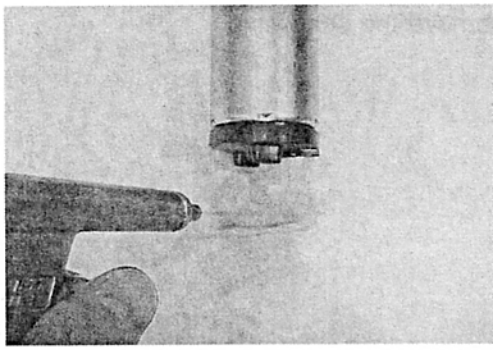

FUEL PUMP AND FUEL MESH FILTER INSTALLATION

Install the fuel pump and fuel mesh filter in the reverse order of removal, and pay attention to the following points:

- Install the new O-rings to the fuel pressure regulator and fuel pipe.
- Apply thin coat of the engine oil to the O-rings.

⚠ CAUTION

Use the new O-rings to prevent fuel leakage.

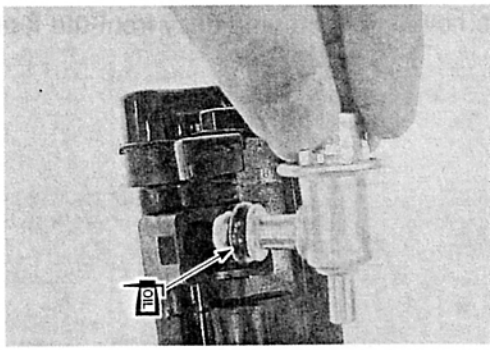

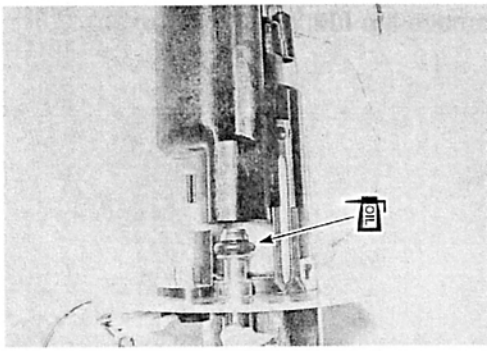

- Pass through the wires behind the thermistors.

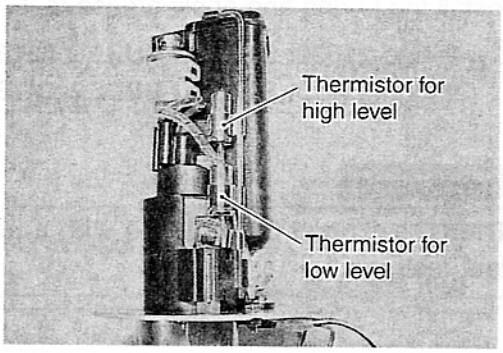

- Be sure to connect the wires to the proper terminals.
  Ⓐ ..... ⊕ terminal for fuel pump
  Ⓑ ..... Thermistor for low level
  Ⓒ ..... Thermistor for high level

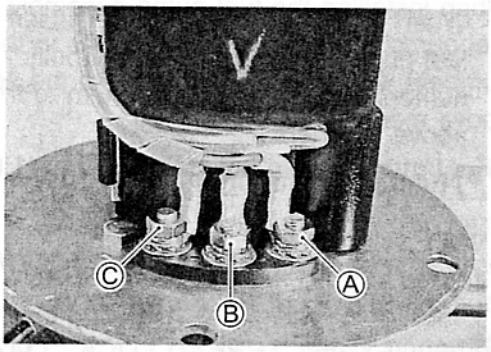

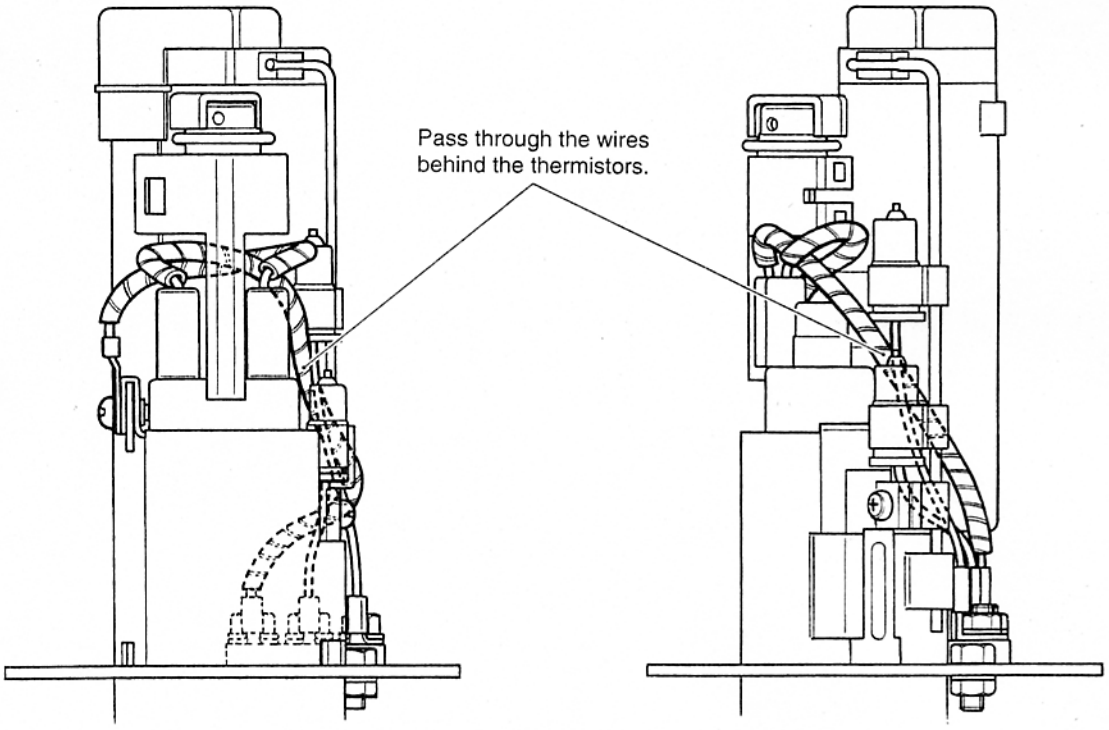

- Install the O-ring and apply grease to it.

99000-25030: SUZUKI SUPER GREASE "A" (For USA)
99000-25010: SUZUKI SUPER GREASE "A" (For the other countries)

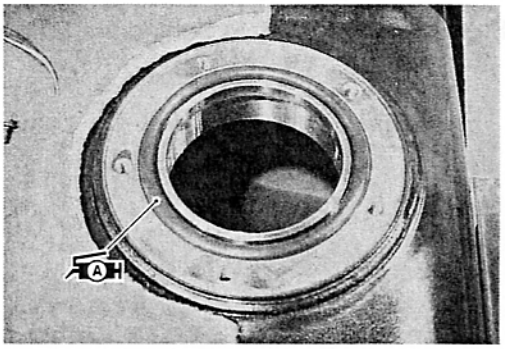

⚠ WARNING

The O-ring must be replaced with a new one to prevent fuel leakage.

- When installing the fuel pump assembly, lightly tighten all the fuel pump assembly mounting bolts in the ascending order of numbers, and then tighten them to the specified torque in the above manner.

Fuel pump mounting bolt: 10 N·m (1.0 kgf·m, 7.0 lb-ft)

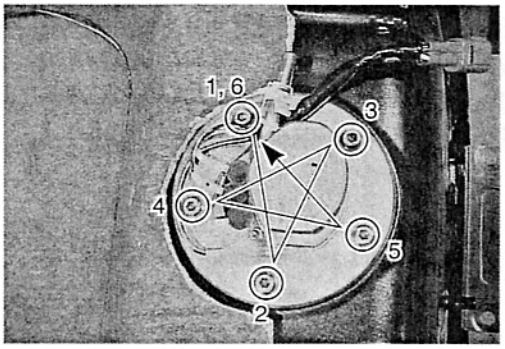

NOTE:
Apply a small quantity of the THREAD LOCK "1342" to the thread portion of the fuel pump mounting bolt.

99000-32050: THREAD LOCK "1342"

THROTTLE BODY

CONSTRUCTION

① TP sensor
② STP sensor
③ STVA
④ Fuel delivery pipe
⑤ O-ring
⑥ Dust seal
⑦ Fuel injector
⑧ Cushion seal
⑨ Vacuum hose
⑩ Fast idle adjusting screw
⑪ Throttle stop screw

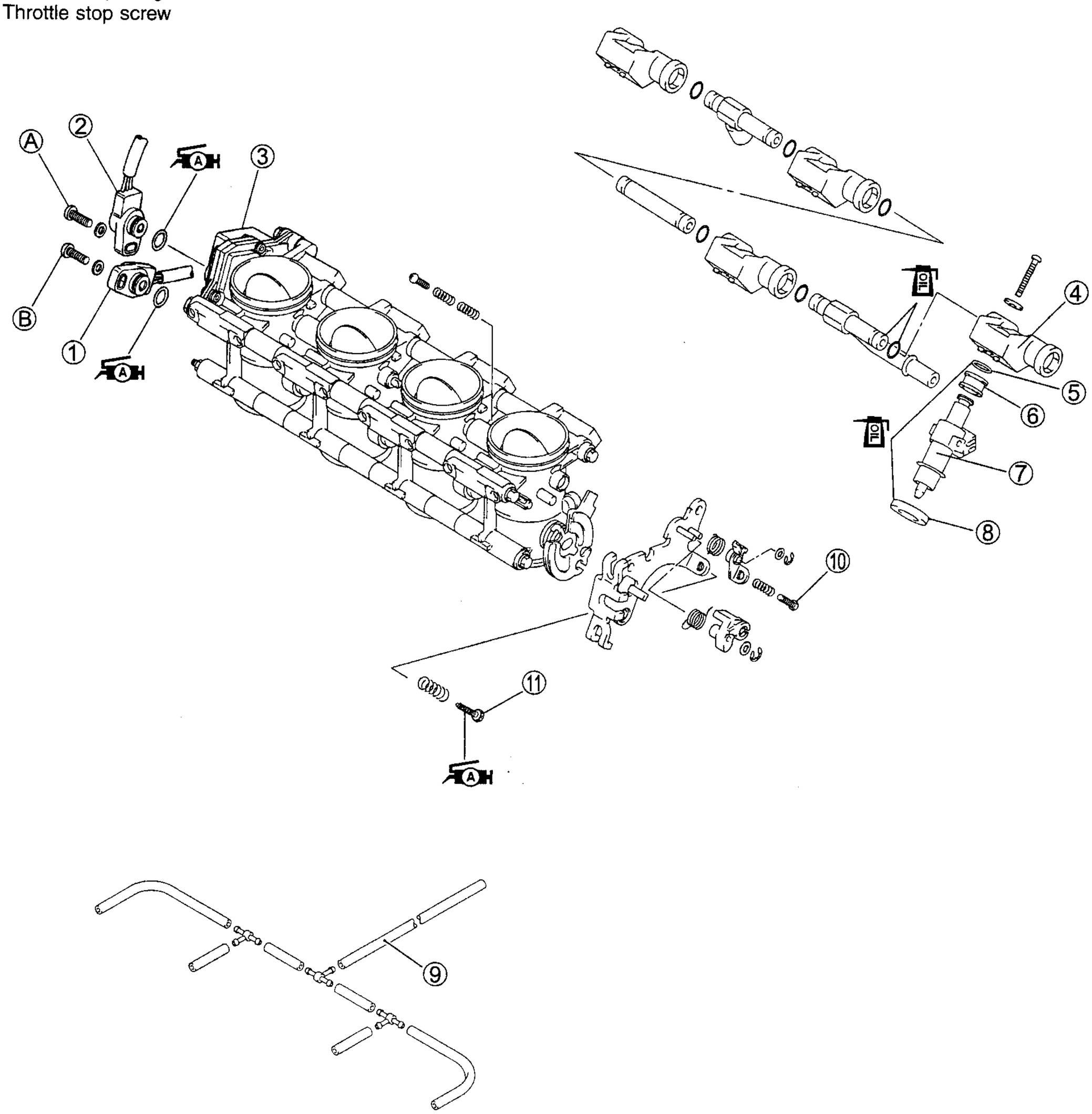

ITEM	N·m	kgf·m	lb-ft
Ⓐ	3.5	0.35	2.5
Ⓑ	3.5	0.35	2.5

AIR CLEANER BOX AND THROTTLE BODY REMOVAL

AIR CLEANER BOX

- Lift and support the fuel tank with its prop stay. (☞4-56)
- Disconnect the IAT sensor coupler ① and PAIR hose ②.

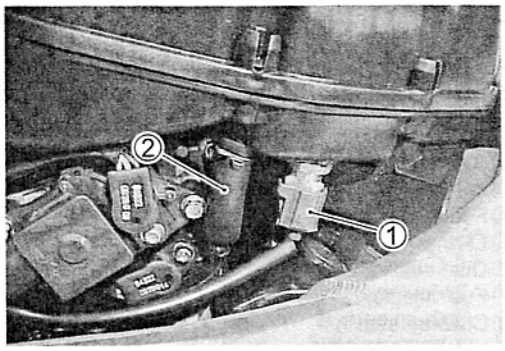

- Disconnect the IAP sensor coupler ③ and vacuum hose ④.
- Disconnect the crankcase breather hose ⑤.

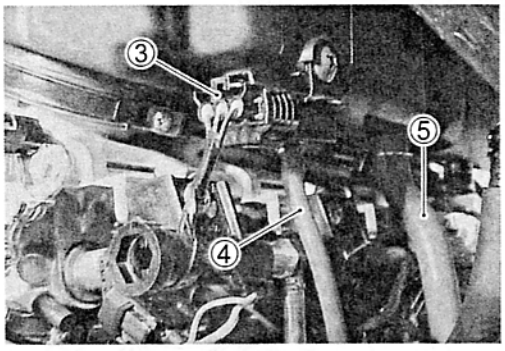

- Loosen the throttle body clamp screws.

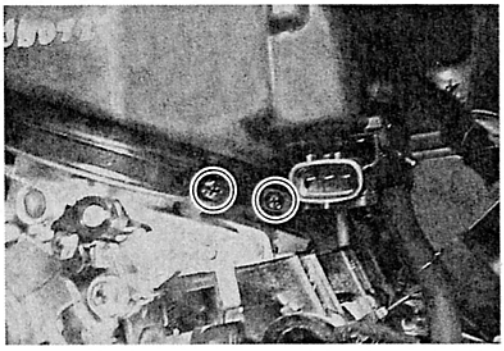

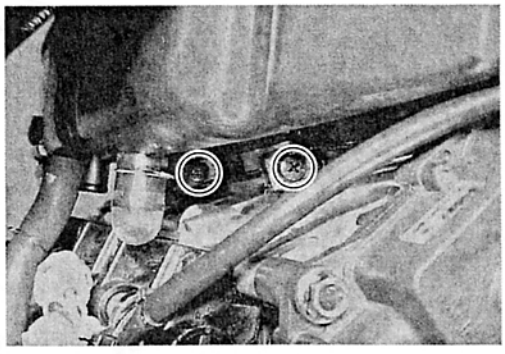

- Remove the air cleaner box mounting bolt.
- Remove the air cleaner box.

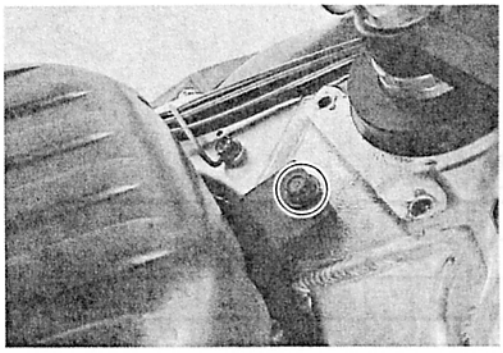

THROTTLE BODY

- Disconnect the throttle cables from their drum.
- Disconnect the fast idle cable from its cam.

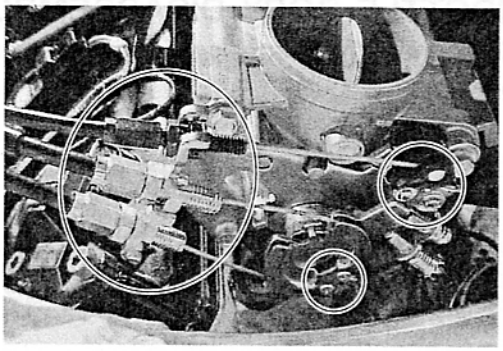

⚠ CAUTION

After disconnecting the throttle cables, do not snap the throttle valve from full open to full close. It may cause damage to the throttle valve and throttle body.

- Place a rag under the fuel feed hose and disconnect the fuel feed hose from the fuel tank.

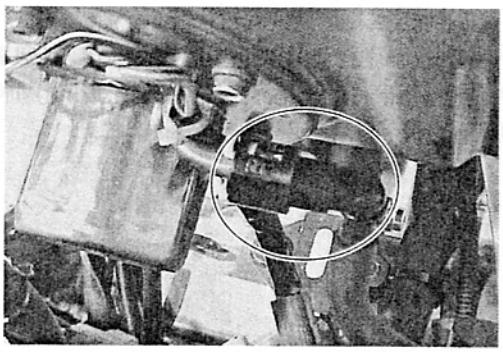

- Disconnect the vacuum hose ① from the PAIR valve.

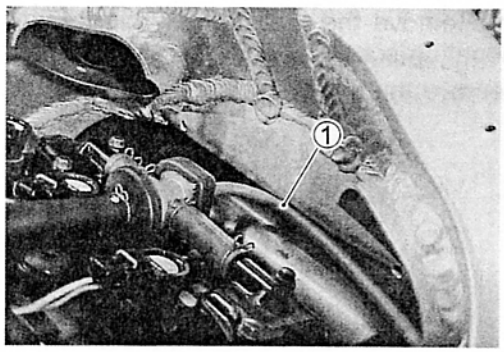

- Disconnect the fuel injector lead wire coupler ②.

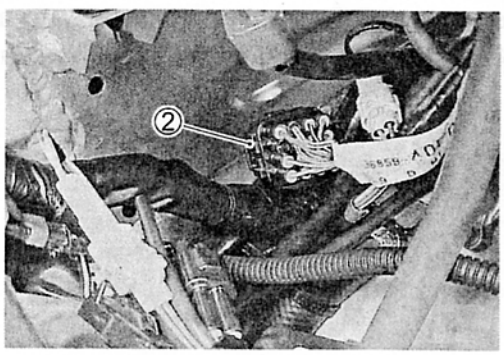

- Loosen the throttle body clamp screws at the intake pipe side.
- Remove the throttle body assembly.

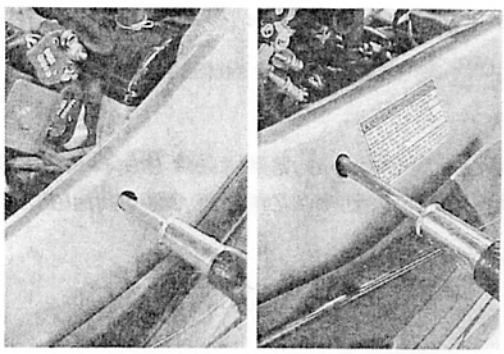

THROTTLE BODY DISASSEMBLY

- Disconnect the respective vaccum hoses from each throttle body.

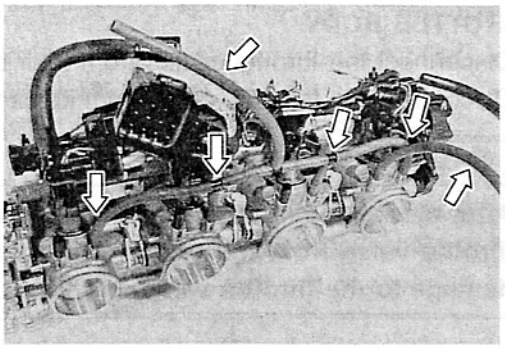

- Remove the lead wire clamps.
- Disconnect the TP sensor lead wire coupler ①, STP sensor lead wire coupler ②, STVA motor lead wire coupler ③ and fuel injector lead wire couplers ④.

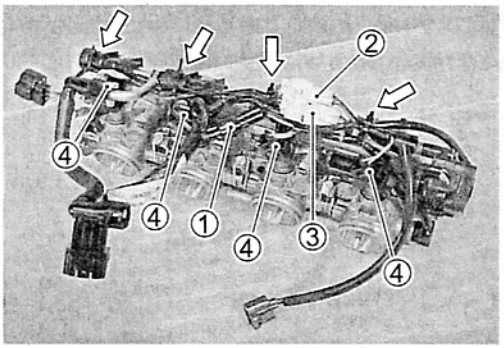

- Remove the fuel delivery pipe assembly ⑤ by removing its mounting screws.
- Remove the fuel injectors.

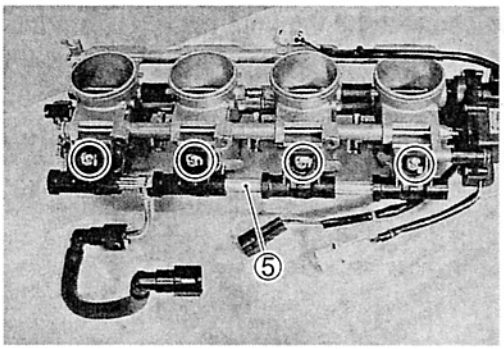

- Separate the throttle body assembly to a pair of two bodies (NOS. 1 • 2 and NOS. 3 • 4) by removing their connecting bolts.

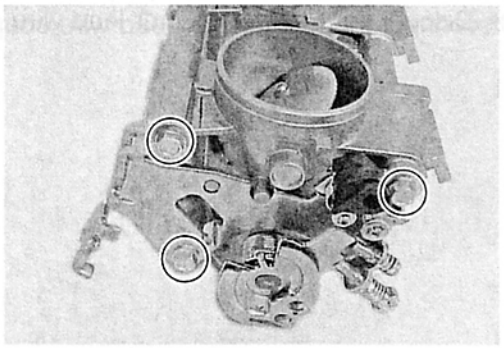

- Remove the TP sensor ⑥ with the special tool.

TOOL 09930-11950: Torx wrench

NOTE:
Prior to disassembly, mark the TP sensor's original position with a paint or scribe for accurate reinstallation.

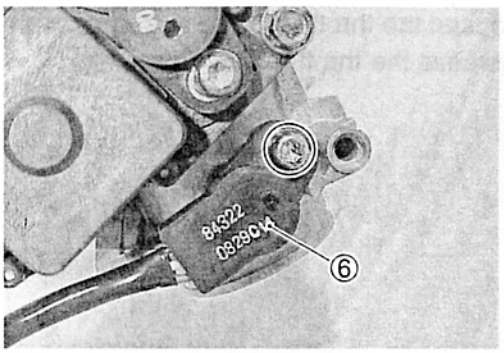

- Remove the STP sensor ① with the special tool.

TOOL **09930-11950: Torx wrench**

NOTE:
Prior to disassembly, mark the STP sensor's original position with a paint or scribe for accurate reinstallation.

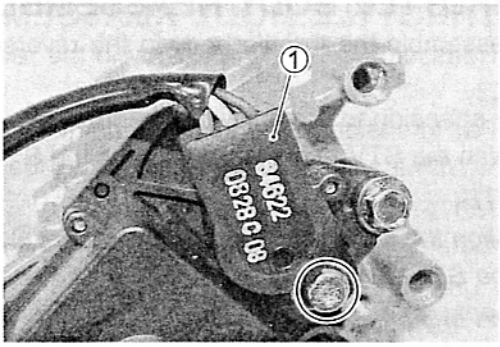

⚠ CAUTION

Never remove the secondary throttle valve and throttle valve.

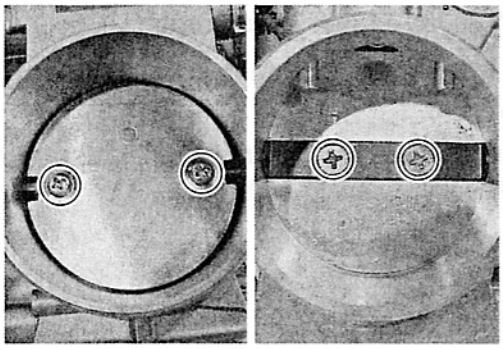

THROTTLE BODY CLEANING

⚠ WARNING

Some carburetor cleaning chemicals, especially dip-type soaking solutions, are very corrosive and must be handled carefully. Always follow the chemical manufacturer's instructions on proper use, handling and storage.

- Clean all passageways with a spray-type carburetor cleaner and blow dry with compressed air.

⚠ CAUTION

Do not use wire to clean passageways. Wire can damage passageways. If the components cannot be cleaned with a spray cleaner it may be necessary to use a dip-type cleaning solution and allow them to soak. Always follow the chemical manufacturer's instructions for proper use and cleaning of the throttle body components. Do not apply carburetor cleaning chemicals to the rubber and plastic materials.

INSPECTION

Check following items for any damage or clogging.

* O-ring
* Throttle shaft bushing and seal
* Throttle valve
* Secondary throttle valve
* Fuel injector filter
* Injector cushion seal
* Injector dust seal
* Vacuum hose

THROTTLE BODY REASSEMBLY

Reassemble the throttle body in the reverse order of disassembly.

Pay attension to the following points:

- With the STV fully opened, install the STP sensor ①.

NOTE:

* *Align the secondary throttle shaft end Ⓐ with the groove Ⓑ of the STP sensor.*
* *Apply grease "A" to the secondary throttle shaft end Ⓐ if necessary.*

TOOL 09930-11950: Torx wrench

STP sensor mounting screw: 3.5 N·m (0.35 kgf·m, 2.5 lb-ft)

NOTE:

If the STP sensor adjustment is necessary, refer to page 4-73 for STP sensor setting procedure.

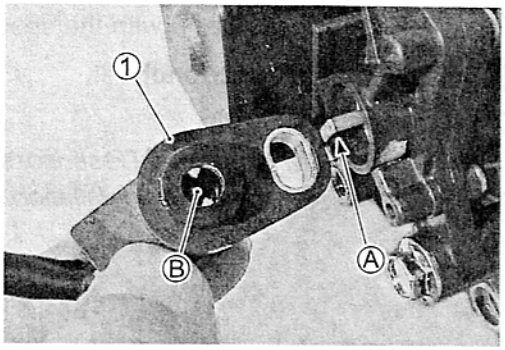

- Install the TP sensor ②.

TOOL 09930-11950: Torx wrench

TP sensor mounting screw: 3.5 N·m (0.35 kgf·m, 2.5 lb-ft)

NOTE:

* *Align the throttle shaft end Ⓒ with the groove Ⓓ of the TP sensor.*
* *Apply grease "A" to the throttle shaft end Ⓒ if necessary.*
  TP sensor setting procedure ☞ 4-30.

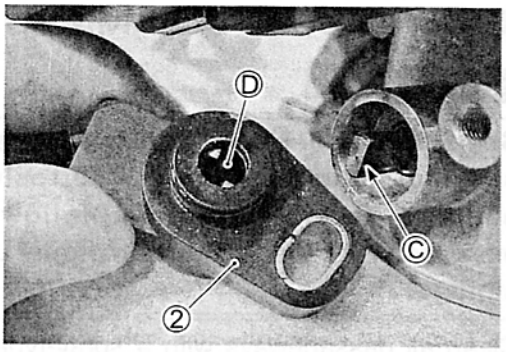

- Position the TV control lever ① between the TV synchronizing screw ② and spring ③ as shown.
- Set each TV to the same opening by turning the balance screws ②.

NOTE:

Apply grease "A" to the lever ①, screw ② and spring ③ if necessary.

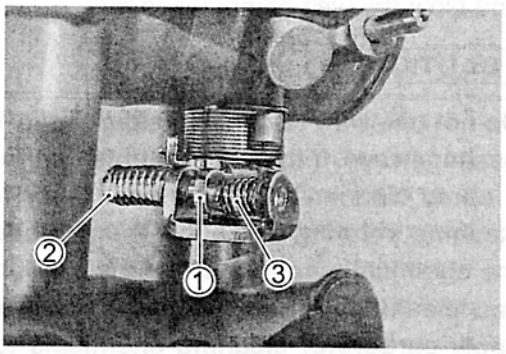

- Place the throttle body assembly on the surface plate and tighten the connecting bolts.

Throttle body connecting bolt: 6 N·m (0.6 kgf·m, 4.5 lb-ft)

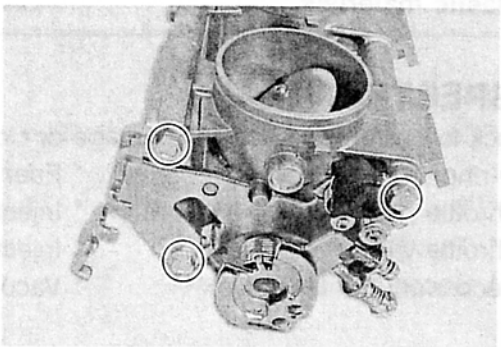

- Apply thin coat of the engine oil to the new fuel injector cushion seals ①, and install them to each fuel injector.

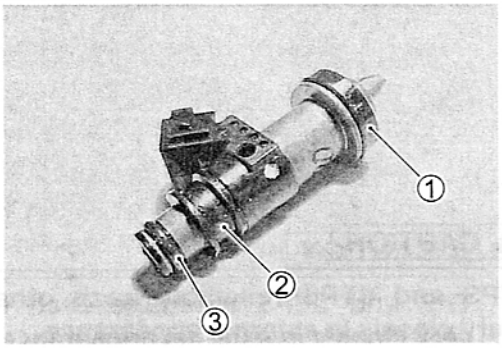

⚠ CAUTION

Replace the cushion seal with a new one.

- Install the seals ② and O-rings ③ to each fuel injector.
- Apply thin coat of the engine oil to the new O-rings ③.
- Install the fuel injectors by pushing them straight to each throttle body.

⚠ CAUTION

Replace the dust seal and O-ring with the new ones. Never turn the injector while pushing it.

- Apply thin coat of the engine oil to the new O-rings ④.

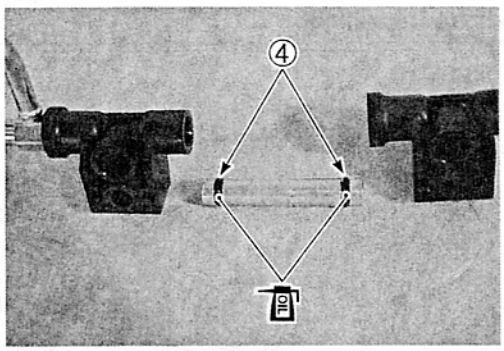

⚠ CAUTION

Replace the O-ring with a new one.

- Assemble the fuel delivery pipes.

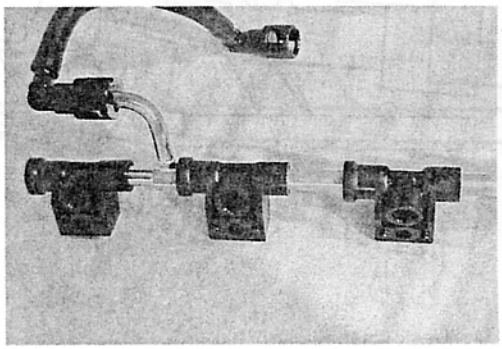

- Install the fuel delivery pipe assembly to the throttle body assembly.

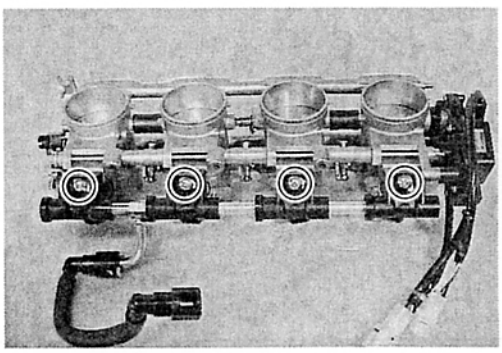

⚠ CAUTION

Never turn the fuel injectors while installing them.

- Tighten the fuel delivery pipe mounting screws.

Fuel delivery pipe mounting screw: 3.5 N·m (0.35 kgf·m, 2.5 lb-ft)

- Connect the fuel injector couplers to each fuel injector.

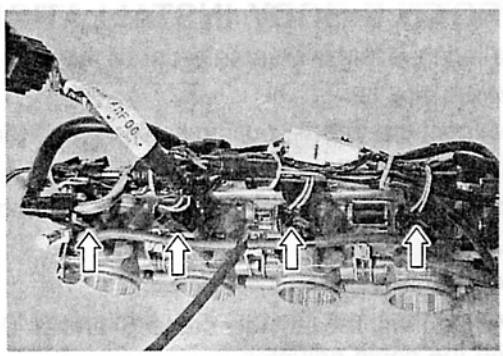

WIRE COLOR

No.1 coupler: Gray/ White
No.2 coupler: Gray/ Black
No.3 coupler: Gray/ Yellow
No.4 coupler: Gray/ Red

⚠ CAUTION

TPS and STPS resemble each other very closely in external appearance. Make sure to check the color of coupler before installing.

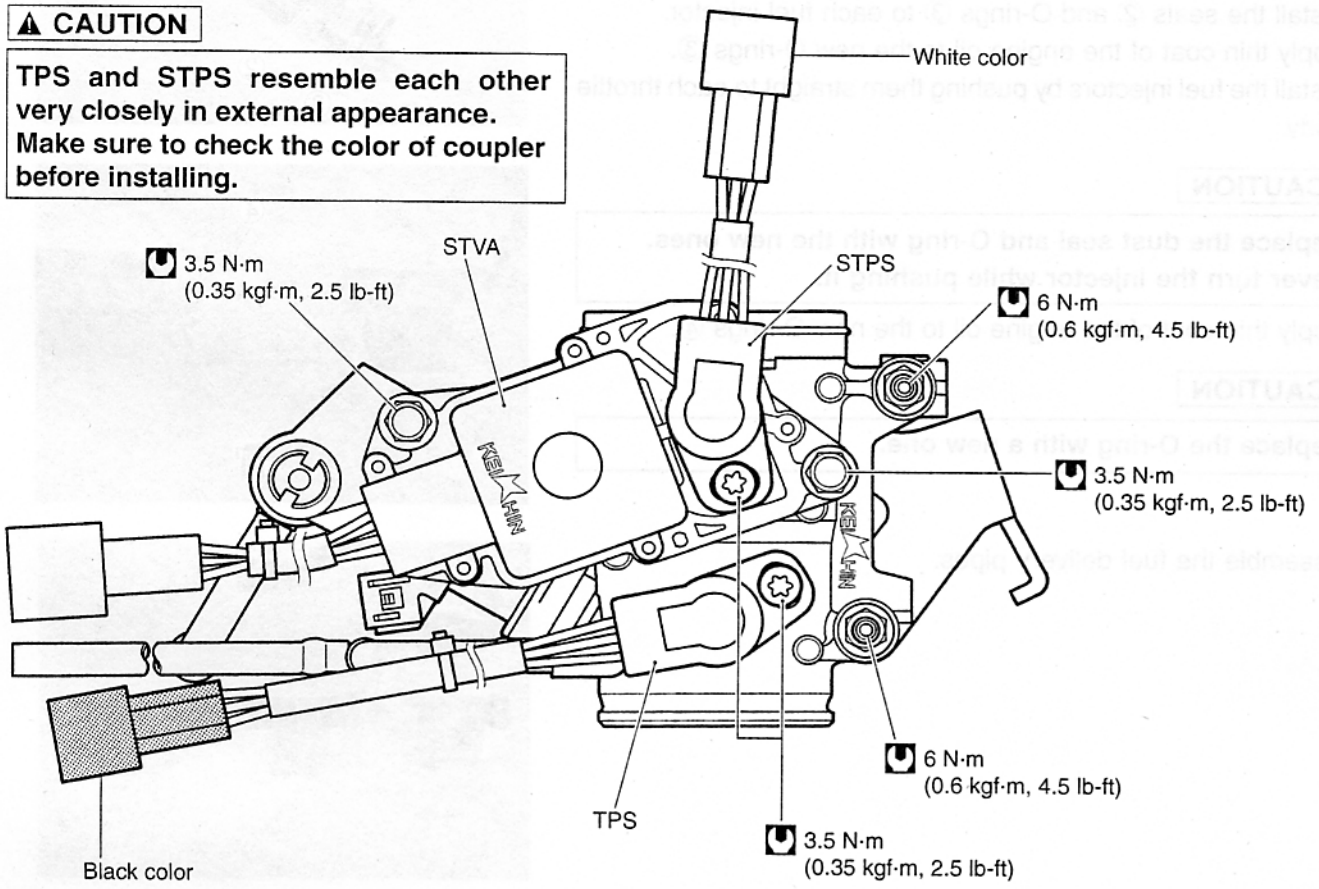

THROTTLE BODY INSTALLATION

Installation is in the reverse order of removal. Pay attention to the following points:

- Connect the throttle pulling cable ① and throttle returning cable ② to the throttle cable drum.
- Adjust the throttle cable play with the cable adjusters ③ and ④.
  Refer to page 4-78 for details.
- Connect the fast idle cable ⑤ and adjust the fast idle cable play with the cable adjuster ⑥.

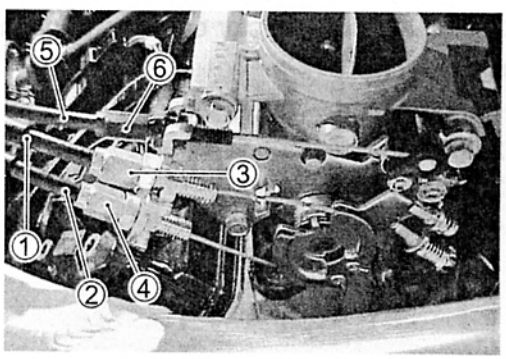

STP SENSOR ADJUSTMENT

If the STP sensor adjustment is necessary, measure the sensor resistance and adjust the STP sensor positioning as follows:

- Disconnect the STP sensor coupler.
- Set the ST valve to fully close position by finger and measure the resistance between yellow and black wires.

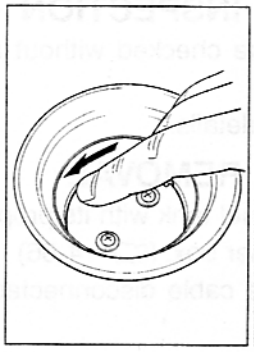

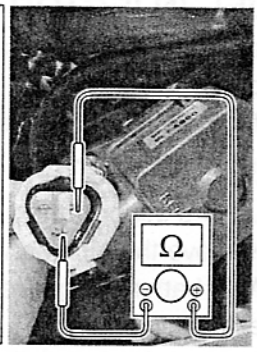

DATA STP sensor setting resistance
ST valve is fully closed: Approx. 0.5 kΩ
(⊕ Yellow – ⊖ Black)

TOOL 09900-25008: Multi circuit tester

Tester knob indication: Resistance (Ω)

- Loosen the STP sensor mounting screws.
- Adjust the STP sensor until resistance is within specification and tighten the STP sensor mounting screws.

TOOL 09930-11950: Torx wrench

STP sensor mounting screw: 3.5 N·m
(0.35 kgf·m, 2.5 lb-ft)

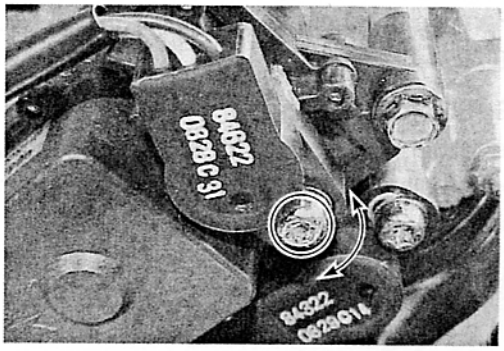

THROTTLE BODY CLAMP POSITION

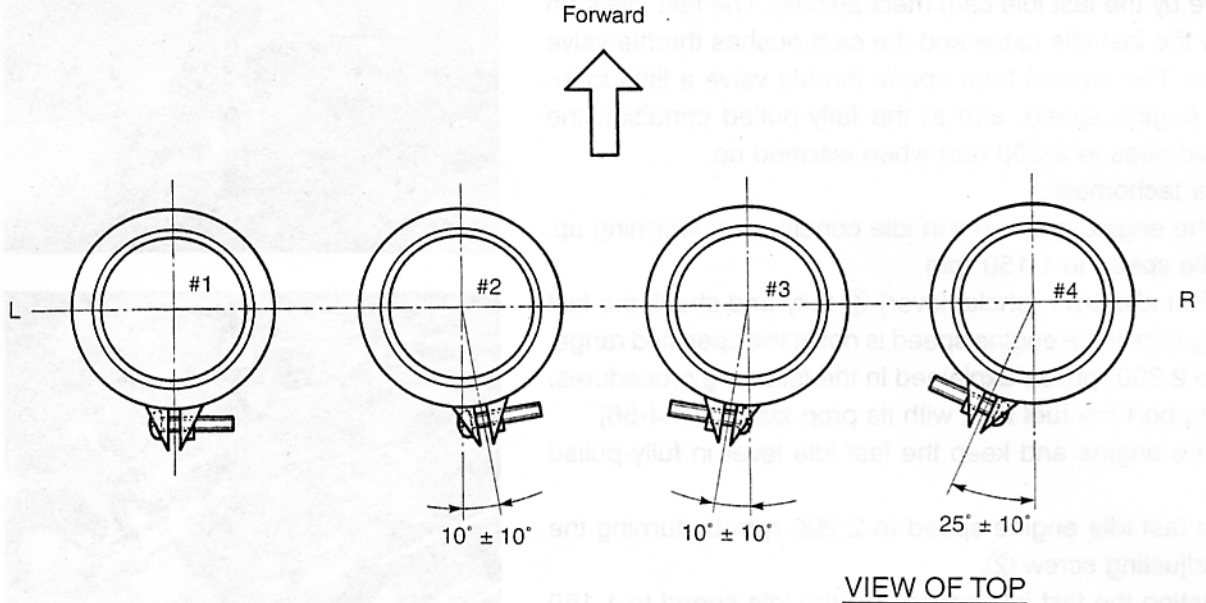

VIEW OF TOP

FUEL INJECTOR INSPECTION

The fuel injector can be checked without removing it from the throttle body.
Refer to page 4-51 for details.

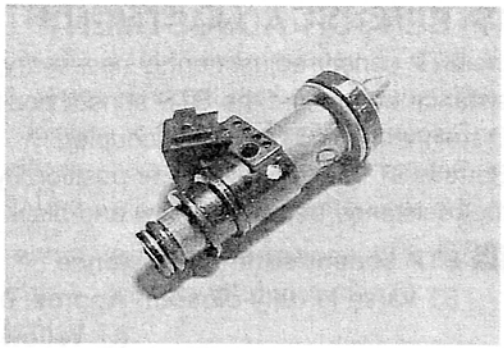

FUEL INJECTOR REMOVAL

- Lift and support the fuel tank with its prop stay. (☞ 4-56)
- Remove the air cleaner box. (☞ 4-66)
- With battery negative cable disconnected, disconnect the injector couplers.
- Remove the fuel delivery pipe assembly. (☞ 4-68)
- Remove the fuel injectors No.1, No.2, No.3 and No.4. (☞ 4-68)

INSPECTION

Check fuel injector filter for evidence of dirt and contamination. If present, clean and check for presence of dirt in the fuel lines and fuel tank.

FUEL INJECTOR INSTALLATION

- Apply thin coat of the engine oil to new injector cushion seals and O-rings.
- Install the injector by pushing it straight to the throttle body. Never turn the injector while pushing it. (☞ 4-71)

FAST IDLE ADJUSTMENT

The fast idle system is a kind of starter system, which opens throttle valve by the fast idle cam mechanically. The fast idle cam is turned by the fast idle cable and the cam pushes throttle valve shaft bracket. The bracket then opens throttle valve a little to increase the engine speed, and at the fully-pulled condition the engine speed rises to 2 200 rpm when warmed up.

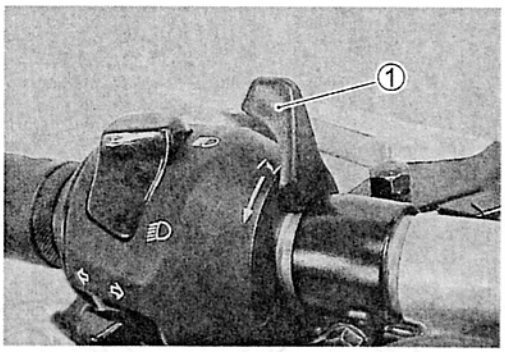

- Connect a tachometer.
- Start up the engine and run it in idle condition for warming up.
- Set the idle speed to 1 150 rpm.
- Turn the fast idle lever (choke lever) ① fully and check the fast idle setting rpm. If the engine speed is not in the specified range, adjust it to 2 200 rpm as explained in the following procedures:

1) Lift and support the fuel tank with its prop stay. (☞ 4-56)
2) Start up the engine and keep the fast idle lever in fully-pulled condition.
3) Adjust the fast idle engine speed to 2 200 rpm by turning the fast idle adjusting screw ②.
4) After adjusting the fast idle speed, set the idle speed to 1 150 rpm.

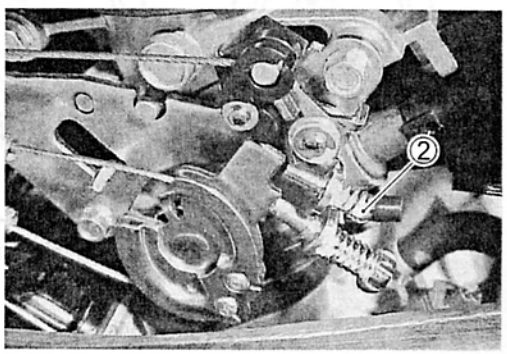

DATA **Fast idle setting rpm : 2 200 rpm (When the engine is warmed.)**
Engine idle rpm : 1 150 rpm (When the engine is warmed.)

THROTTLE VALVE SYNCHRONIZATION

Check and adjust the throttle valve synchronization among four cylinders.

CALIBRATING EACH GAUGE

- Lift and support the fuel tank. (☞ 4-56)
- Start up the engine and run it in idling condition for warming up.
- Stop the warmed-up engine.
- Disconnect the IAT sensor coupler ① and remove the IAT sensor from the air cleaner box.
- Connect the removed IAT sensor to its coupler and place it on the frame.

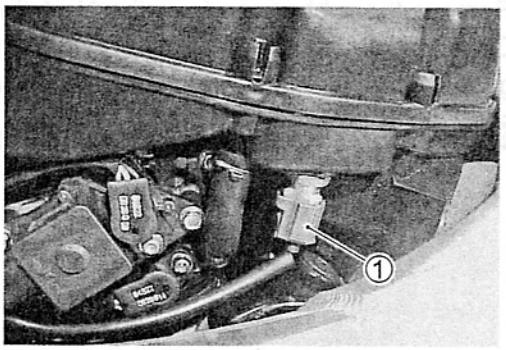

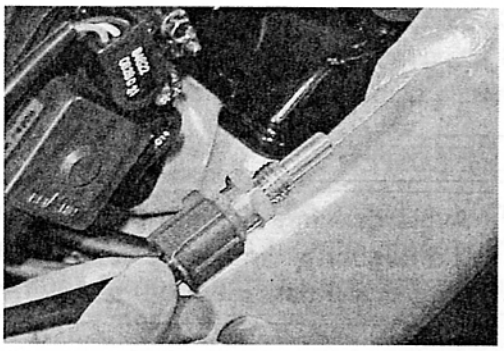

- Remove the IAP sensor mounting screw ②.
- Remove the air cleaner box. (☞ 4-66)

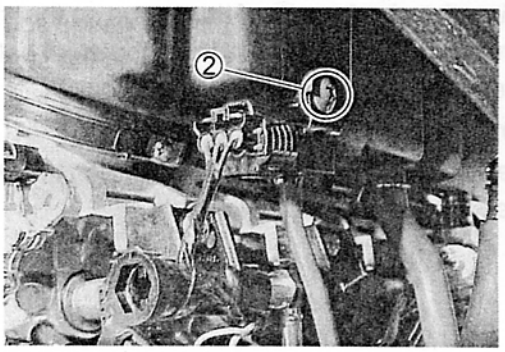

- Disconnect the PAIR vacuum hose ③ from the No.4 throttle body.

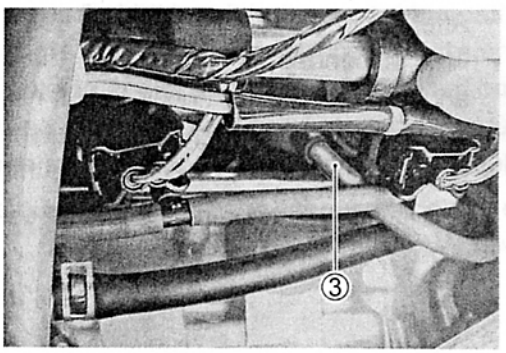

- Connect a proper rubber cap ④ to the nipple on the No.4 throttle body.

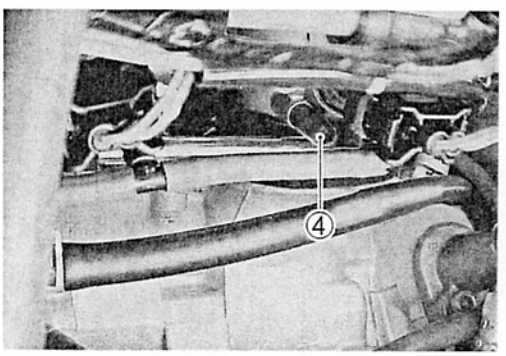

- Remove the rubber cap from the No.1 throttle body.
- Connect one of the four rubber hoses of the vacuum balancer gauge to the nipple ① on the No.1 throttle body.

TOOL **09913-13121: Vacuum balancer gauge**

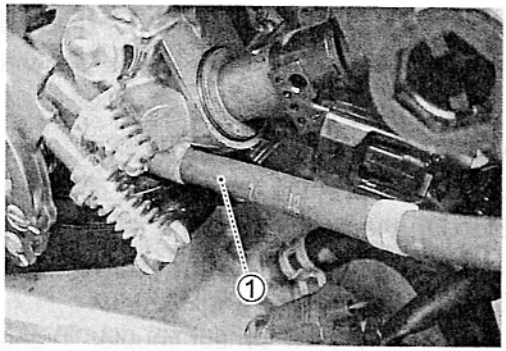

- Connect a tachometer.
- Start up the engine and keep it running at 1 150 rpm by turning throttle stop screw ②.

⚠ CAUTION

Avoid drawing dirt into the throttle body while running the engine without air cleaner box. Dirt drawn into the engine will damage the internal engine parts.

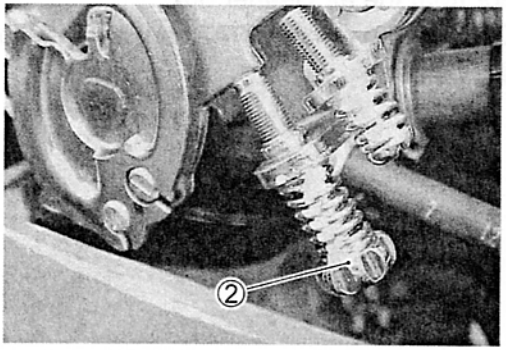

- Turn the air screw ③ of the gauge so that the vacuum acting on the tube of that hose will bring the steel ball ④ in the tube to the center line ⑤.

NOTE:
The vacuum gauge is positioned approx. 30° from the horizontal level.

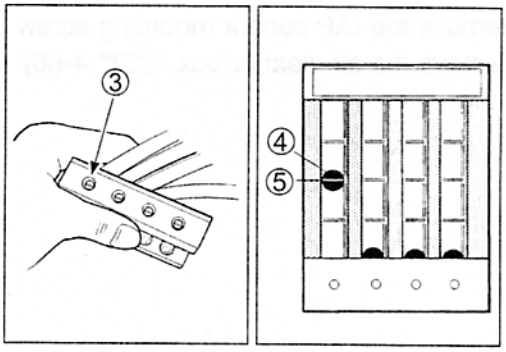

- After making sure that the steel ball stays steady at the center line, disconnect the hose from the No.1 throttle body nipple and connect the next hose to this nipple.
- Turn air screw to bring the other steel ball ⑥ to the center line.
- Repeat the above process on the third and fourth hoses.

The balancer gauge is now ready for use in balancing the throttle valves.

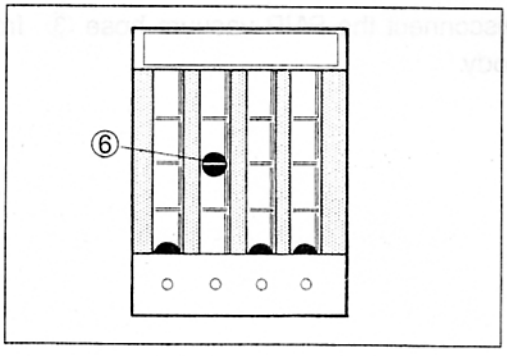

THROTTLE VALVE SYNCHRONIZATION

- To synchronize throttle valves, remove the rubber caps ① from each vacuum nipple and disconnect the PAIR vacuum hose ② from the No.4 throttle body and connect the vacuum balancer gauge hoses to the vacuum nipples respectively.

TOOL 09913-13121: Vacuum balancer gauge

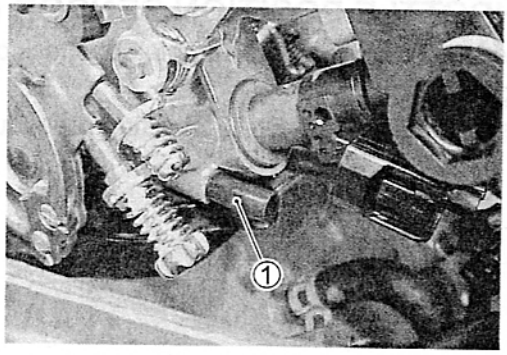

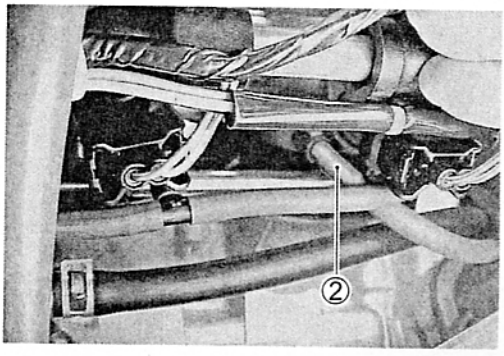

- Connect a tachometer and start up the engine.
- Bring the engine rpm to 1 150 rpm by the throttle stop screw.
- Check the vacuum of the four cylinders and balance the four throttle valves.

The vacuum gauge is positioned approx. 30° from the horizontal level, and in this position the four balls should be within one ball dia. If the difference is larger than one ball, turn the balance adjusting screw on the throttle body and bring the ball to the same level.

A correctly adjusted throttle valve synchronization has the balls in the No. 1 through 4 at the same level.

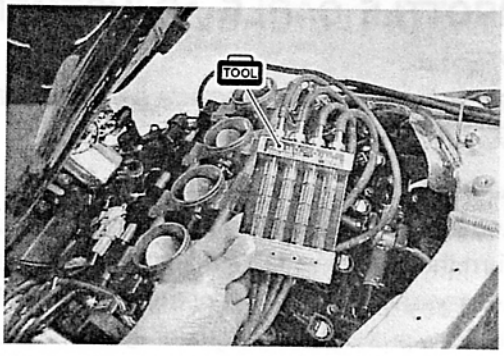

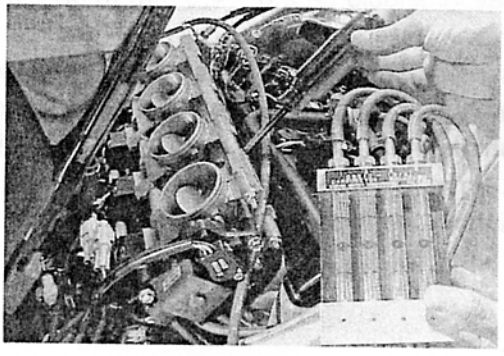

⚠ CAUTION

Avoid drawing dirt into the throttle body while running the engine without air cleaner box. Dirt drawn into the engine will damage the internal engine parts.

NOTE:

* *During balancing the throttle valves, always set the engine rpm at 1 150 rpm, using throttle stop screw.*
* *After balancing the four valves, set the idle rpm to 1 150 rpm by the throttle stop screw after installing the air cleaner box.*

THROTTLE POSITION SENSOR (TPS) SETTING

After all adjustments are completed, check or adjust the TPS setting condition.
(Refer to page 4-30 for TPS setting procedure.)

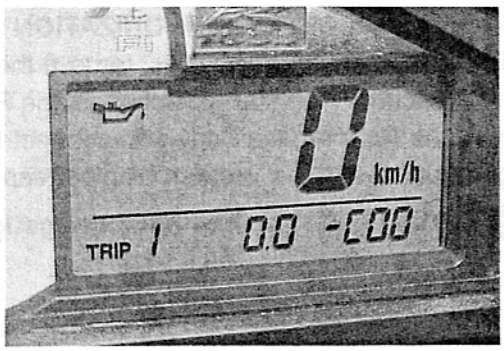

THROTTLE CABLE ADJUSTMENT

NOTE:
Minor adjustment can be made by the throttle grip side adjuster.
(☞ 2-15)

MAJOR ADJUSTMENT

- Loosen the lock nuts ① of the throttle returning cable ②.
- Turn the returning cable adjuster ③ to obtain proper cable play.
- Loosen the lock nuts ④ of the throttle pulling cable ⑤.
- Turn the pulling cable adjuster ⑥ in or out until the throttle cable play Ⓐ should be 2.0 – 4.0 mm (0.08 – 0.16 in) at the throttle grip.
- Tighten the lock nuts ④ securely while holding the adjuster ⑥.
- While holding the throttle grip at the fully closed position, slowly turn the returning cable adjuster ③ to obtain a cable slack Ⓑ of 1.0 mm (0.04 in).
- Tighten the lock nuts ① securely.

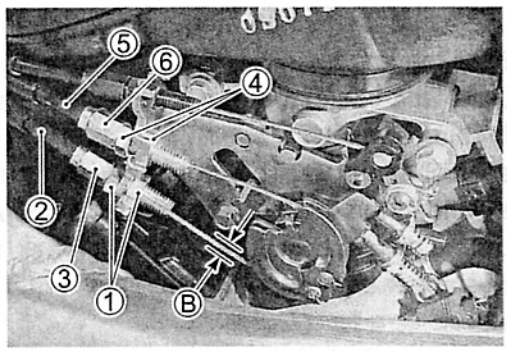

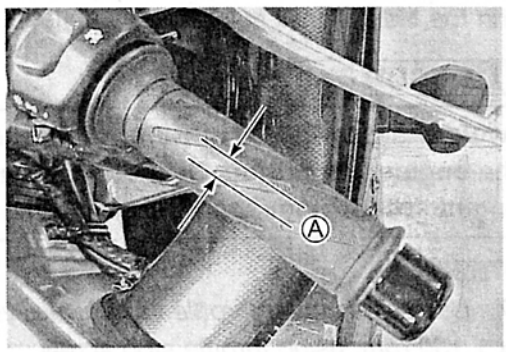

EXCVA (EXHAUST CONTROL VALVE ACTUATOR) AND EXCV (EXHAUST CONTROL VALVE)

EXCVA REMOVAL

- Turn the ignition switch OFF.
- Remove the front and rear seats.
- Lift and support the fuel tank with its prop stay. (☞4-56)
- Connect the special tool (Mode select switch) to the dealer mode coupler. (☞4-29)
- After turning the special tool's switch ON, turn the ignition switch ON.

TOOL 09930-82710: Mode select switch

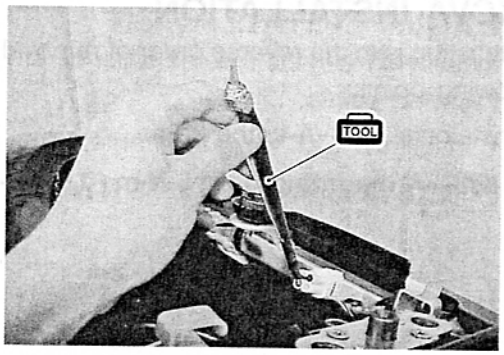

- Check the cable slots Ⓐ of the EXCVA pulley facing forward (adjustment position) as shown.
- Turn the ignition switch OFF.

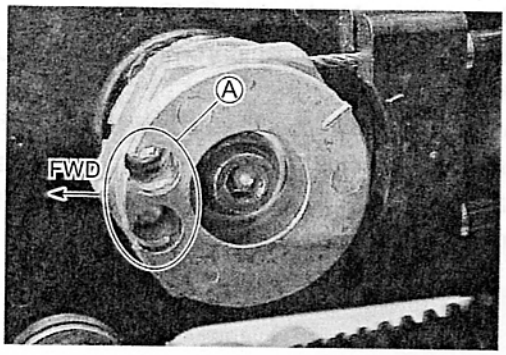

⚠ CAUTION

Before removing the EXCVA, be sure to set the EXCVA pulley to the adjustment position.

- Hold the EXCVA pulley with an adjustable wrench, and loosen the pulley mounting bolt .

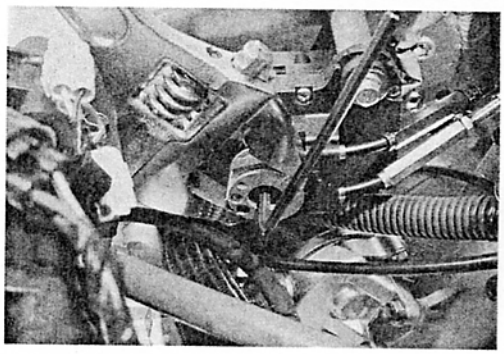

⚠ CAUTION

When loosening or tightening the pulley bolt, be sure to fix the pulley with an adjustable wrench, or EXCVA may get damaged.

- Turn in the No.2 cable adjuster ① fully and remove the pulley together with the cables.
- Disconnect the No.2 cable ② and then No.1 cable ③ from the pulley.
- Disconnect the EXCVA lead wire couplers ④.

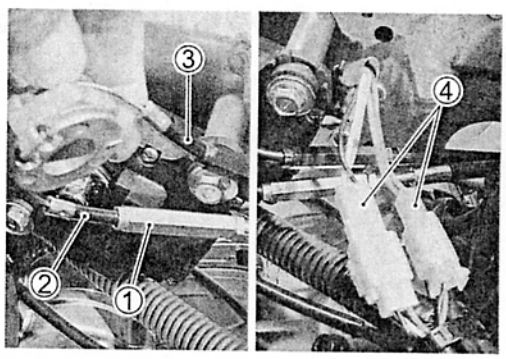

- Remove the EXCVA from the frame.

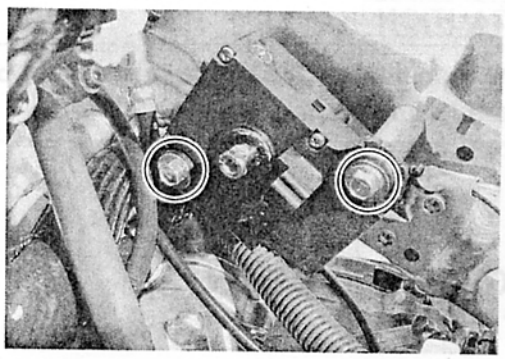

EXCVA INSTALLATION

Installation is in the reverse order of removal. Pay attension to the following points:

- Install the EXCVA to the frame.

EXCVA mounting bolt: 5 N·m (0.5 kgf·m, 3.5 lb-ft)

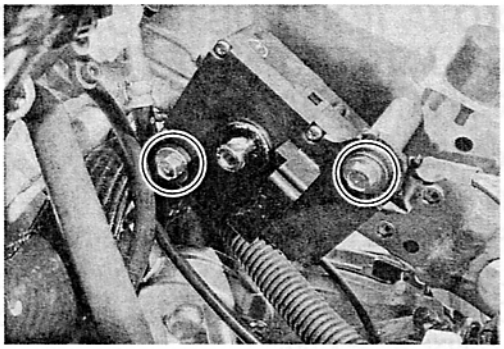

- Connect the No.1 cable ① (Black chrome plated adjuster) and No.2 cable ② (Silver chrome plated adjuster) to the EXCVA pulley.
- After connecting the No.2 cable ②, loosen the lock nut ③ and turn the adjuster ④ in or out until the thread length Ⓐ on the cable adjuster to provide more than 13.5 mm (0.53 in) and tighten the lock nut ③.

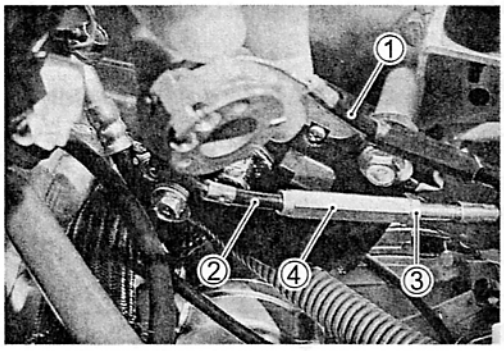

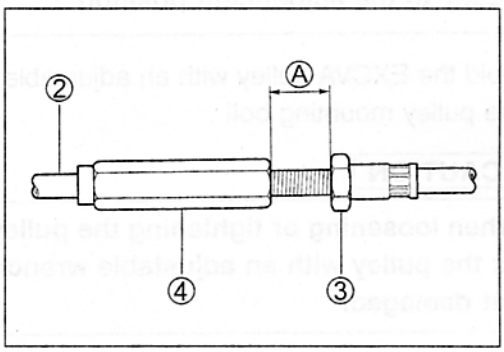

- Install the pulley ⑤ to the shaft ⑥ by aligning the groove Ⓑ with the line Ⓒ.

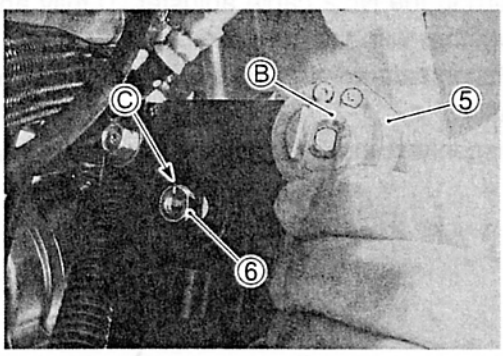

⚠ CAUTION

The cable slots of EXCVA pulley must be located to forward (adjustment position). ☞4-79

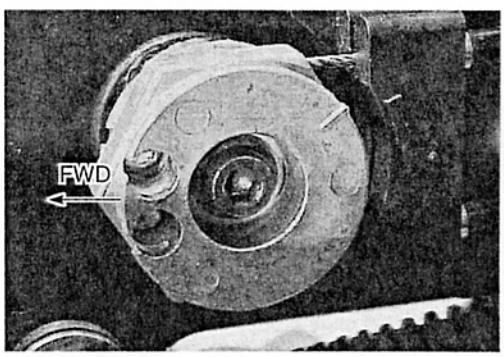

EXCVA INSPECTION

☞4-53

- Hold the pulley with an adjustable wrench, and then tighten the pulley mounting bolt to the specified torque.

EXCVA pulley mounting bolt: 5 N·m (0.5 kgf·m, 3.5 lb-ft)

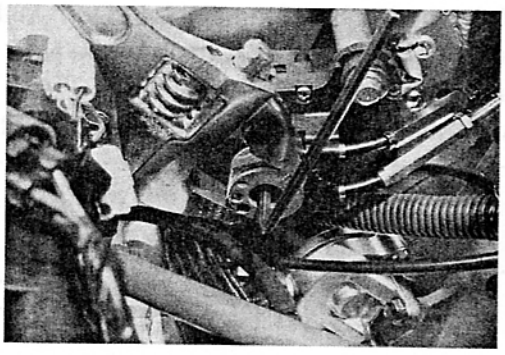

⚠ CAUTION

When loosening or tightening the pulley bolt, be sure to fix the pulley with an adjustable wrench, or EXCVA may get damaged.

EXCV CABLE REPLACEMENT

- Disconnect the EXCV cables from the EXCVA pulley. (Refer to the EXCVA REMOVAL procedures.) ☞4-79
- Disconnect the EXCV cables from the EXCV pulley. (Refer to the EXCV REMOVAL procedures.) ☞4-86

NOTE:
The EXCV cables are identified by the plated chrome color and shape.
Black chrome plated adjuster : No.1 cable
Silver chrome plated adjuster : No.2 cable

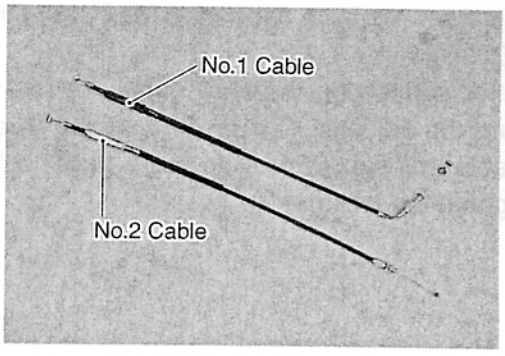

- Connect the EXCV cables (No.1 and No.2) temporarily to the EXCV pulley.
- Check or adjust the clearance between the adjuster end and EXCV pulley to provide more than 3 mm (0.12 in).
- Install the muffler joint pipe together with the muffler body. ☞4-87

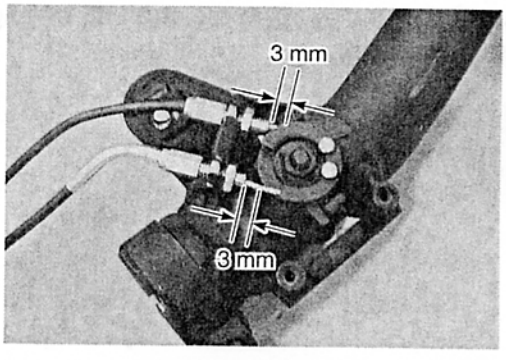

- Make the No.1 cable straight and turn the No.1 cable adjuster ① in or out until the inner cable length Ⓐ should be 28 – 29 mm (1.10 – 1.14 in).
- After adjusting the inner cable lengh Ⓐ, tighten the lock nut ②.

① No.1 cable adjuster: Black chrome plated

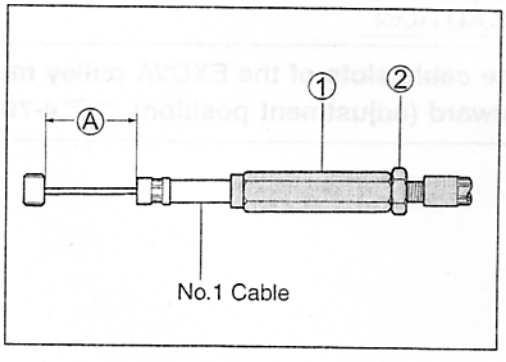

- Make the No.2 cable straight and turn in the cable adjuster ① fully.
- Loosen the lock nuts ② and turn the No.2 cable adjuster ③ in or out until the inner cable length Ⓐ should be 52 – 53 mm (2.05 – 2.09 in).
- After adjusting the inner cable length Ⓐ, tighten the lock nuts ②.

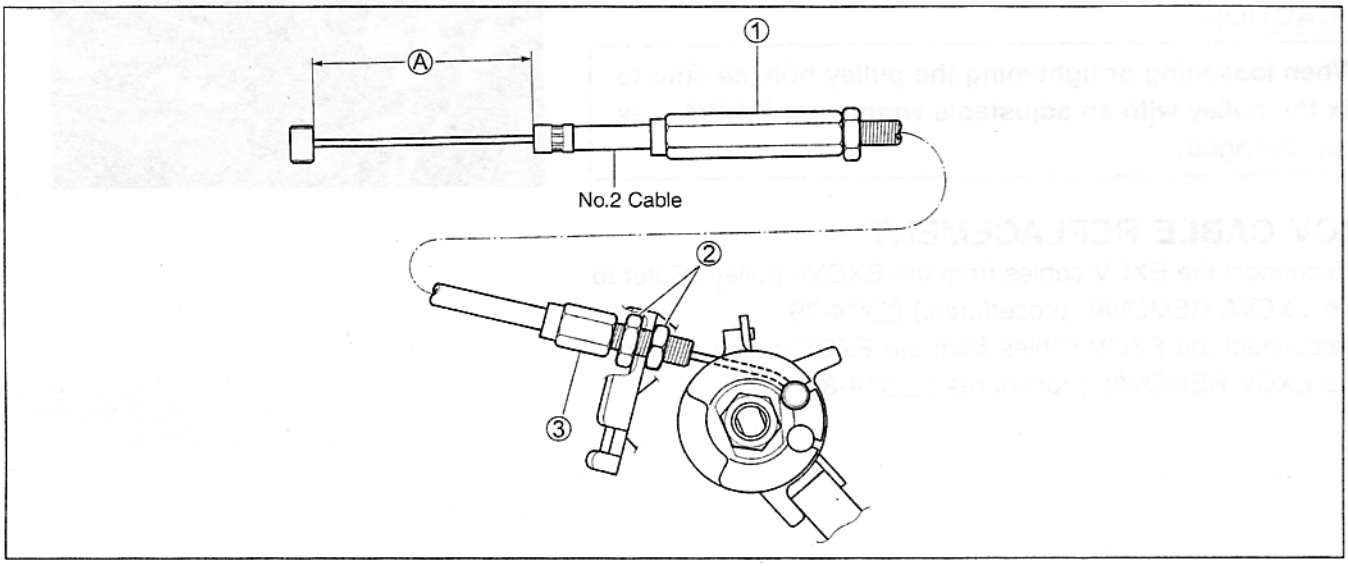

- Connect the No.1 cable and No.2 cable to the EXCVA pulley. ☞4-80
- After connecting the No.2 cable, loosen the lock nut ④ and turn the adjuster ⑤ in or out until the thread length Ⓑ on the cable adjuster to provide more than 13.5 mm (0.53 in) and tighten the lock nut ④.

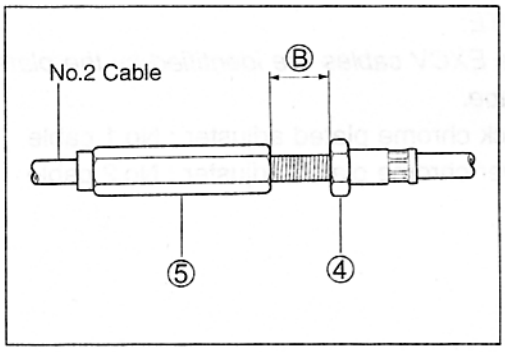

- Install the pulley ① to the shaft ② by aligning the groove Ⓐ with the line Ⓑ.

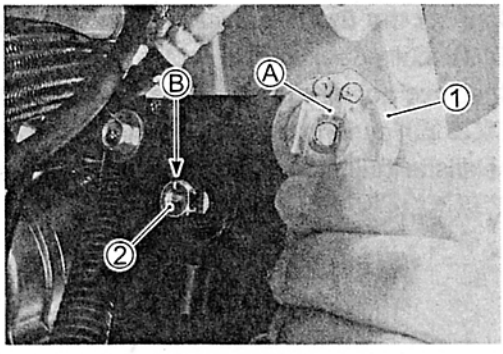

⚠ CAUTION

The cable slots of the EXCVA pulley must be located to forward (adjustment position). ☞4-79

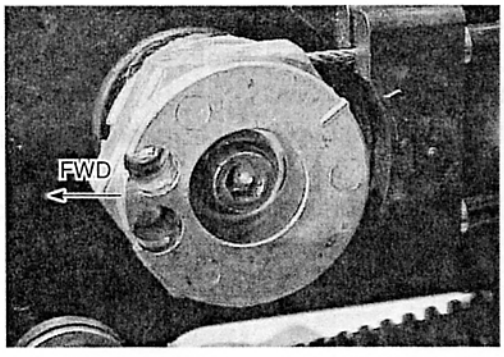

- Hold the EXCVA pulley with an adjustable wrench, and then tighten the pulley mounting bolt to the specified torque.

EXCVA pulley mounting bolt: 5 N·m (0.5 kgf·m, 3.5 lb-ft)

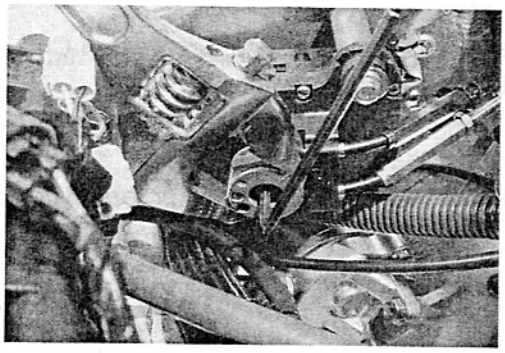

⚠ CAUTION

When loosening or tightening the pulley bolt, be sure to fix the pulley with an adjustable wrench, or EXCVA may get damaged.

EXCVA ADJUSTMENT

1st step:

- Set the EXCVA to adjustment position. ☞4-79

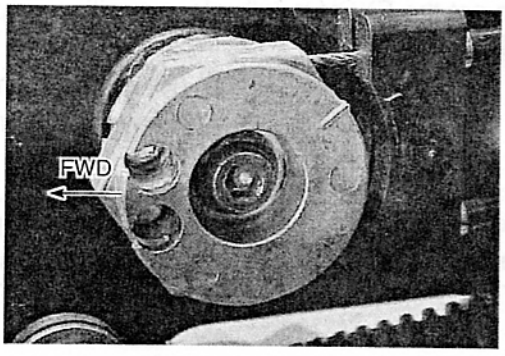

- Make sure that outer cable ends are fixed into the stopper Ⓐ.

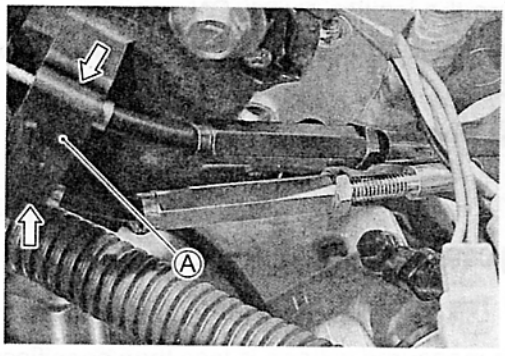

2nd step:

- Turn the mode select switch OFF.
- Turn the ignition switch ON to check the EXCVA operation.
- Turn the mode select switch ON.
- If C46 is not indicated on the LCD (DISPLAY), the adjustment is correctly completed. In this case, it is unnecessary to proceed to 3rd step.
- If C46 is indicated, repeat the adjustment procedure from 1st step to 2nd step and also perform 3rd step.

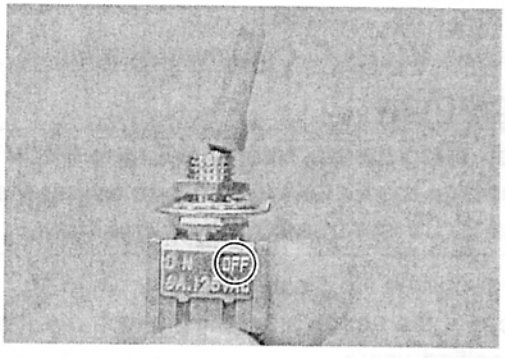

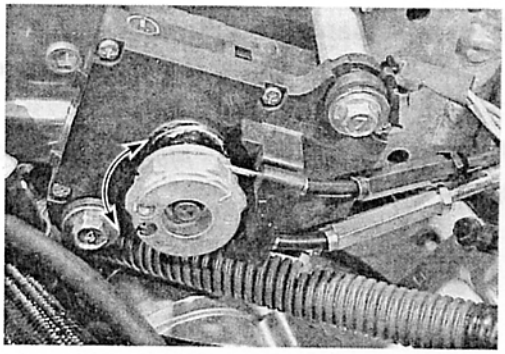

3rd step:

This procedure is only required when C46 is indicated.

- Turn the ignition switch OFF.
- Insert the two copper wires into the back side of the position sensor lead wire coupler ①.
- Disconnect the EXCVA motor lead wire coupler ②.

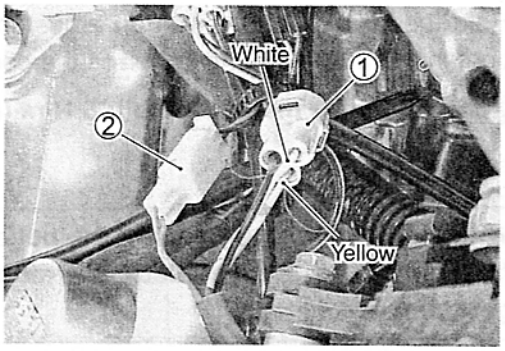

- To set the EXCV to fully close position, apply 12 volts to Ⓐ and Ⓑ terminals.

  Positive wire —— Ⓐ (Pink wire) terminal
  Negative wire —— Ⓑ (Gray wire) terminal

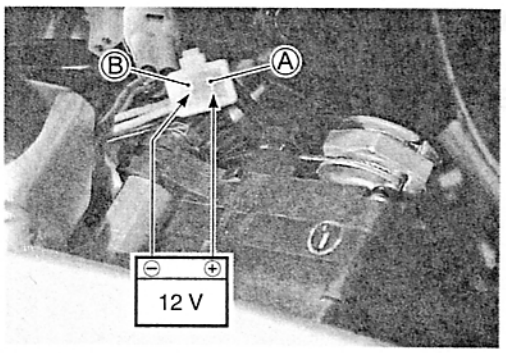

⚠ CAUTION

To prevent the motor damage, stop to apply 12V as soon as the EXCV reaches to fully close position.

- Turn the ignition switch ON.
- Measure the position sensor output voltage at fully close position.

DATA Position sensor output voltage
EXCV is fully close: more than 0.2 V
(⊕ Yellow – ⊖ White)

TOOL 09900-25008: Multi circuit tester

Tester knob indication: Voltage (⎓)

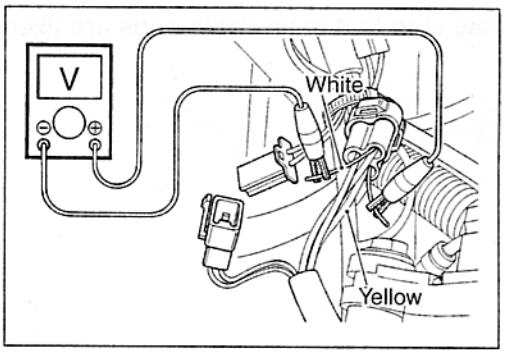

If the measured voltage is less than specification, adjust the No.1 cable adjuster as follows:

- Set the EXCVA to adjustment position. (☞4-79)

⚠ CAUTION

Adjusting the No.1 cable with the EXCV fully closed can damage the EXCVA. Be sure to adjust the No.1 cable with the EXCV set in adjustment position.

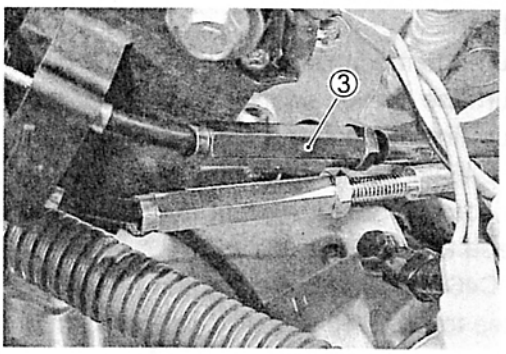

- Turn out the No.1 cable adjuster ③.
- Repeat the above procedure until the output voltage becomes specified value.

DATA Position sensor output voltage
EXCV is fully close: 0.2 ≦ output voltage ≦ 0.8 V

NOTE:

If C46 code is indicated after sdjusting the voltage, increase the voltage to 0.4 V.

To set the EXCV to fully open position, apply 12 volts to Ⓐ and Ⓑ terminals.

Positive wire —— Ⓑ (Gray wire) terminal
Negative wire —— Ⓐ (Pink wire) terminal

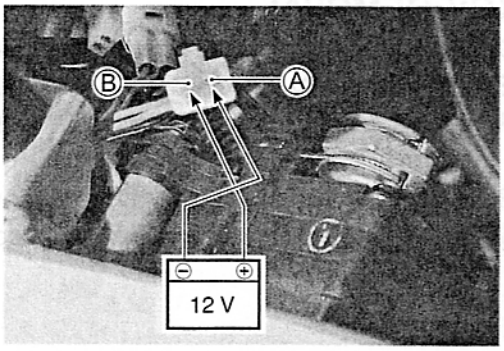

⚠ CAUTION

To prevent the motor damage, stop to apply 12V as soon as the EXCV reaches to fully open position.

Measure the position sensor output voltage at fully open position.

DATA Position sensor output voltage
EXCV is fully open: less than 4.8 V
(⊕ Yellow – ⊖ White)

If the measured voltage is more than specification, adjust the No.2 cable adjuster as follows:

- Set the EXCVA to adjustment position. (☞4-79)

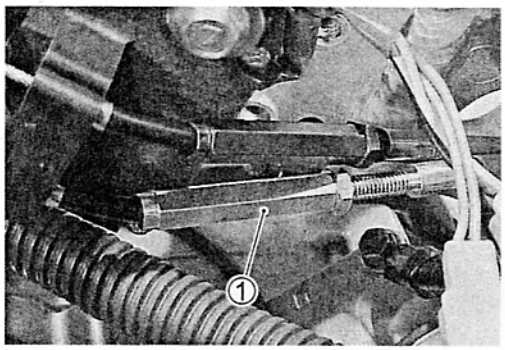

⚠ CAUTION

Adjusting the No.2 cable with the EXCV fully opened can damage the EXCVA. Be sure to adjust the No.2 cable with the EXCV set in adjustment position.

- Turn out the No.2 cable adjuster ①.
- Repeat the above procedure until the output voltage is within the specified value.

DATA Position sensor output voltage
EXCV is fully open: 4.2 ≦ output voltage ≦ 4.8 V

- After adjusting the EXCV cables, perform 2nd step to confirm C46 is not indicated.

EXCV REMOVAL

- Disconnect the two cables from the EXCVA pulley. (Refer to the EXCVA REMOVAL procedures.) ☞4-79
- Remove the right under cowling. (☞6-3)

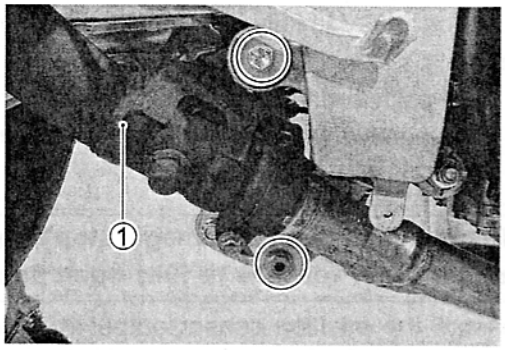

- Remove the muffler joint pipe ① together with the muffler body ② by removing the mounting bolts and connector bolt.

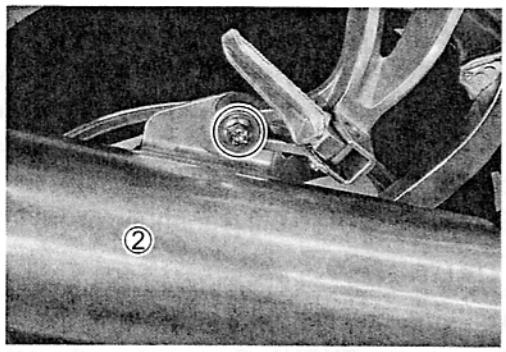

- Remove the EXCV cover ③ and disconnect the two cables from the EXCV pulley.

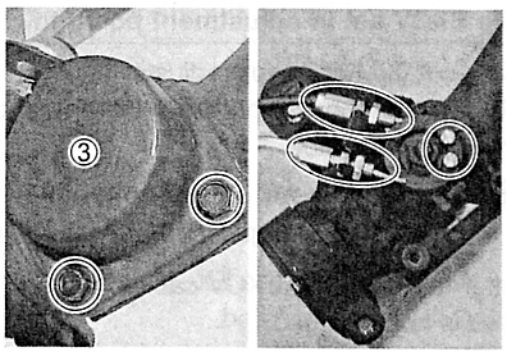

EXCV INSPECTION

- Turn the EXCV by hand and check that it moves smoothly.
- If it dose not move smoothly, replace the EXCV together with the muffler joint pipe.
- Decarbonize the EXCV if necessary.

⚠ CAUTION

*** Do not attempt to disassemble the EXCV.**
*** The EXCV is available only as the muffler joint pipe assembly.**

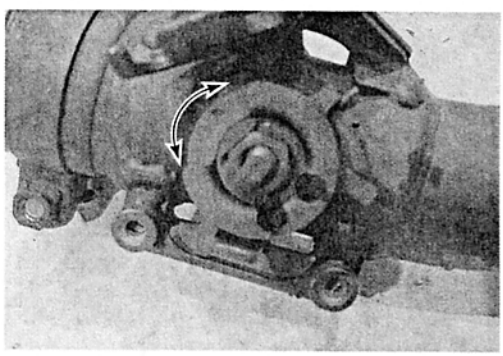

EXCV INSTALLATION

- Connect the EXCV cables temporarily to the EXCV pulley.
- Adjust the clearance between the adjuster end and EXCV pulley to provide more than 3 mm (0.12 in).
- Adjust the inner cable length of the No.2 cable. ☞4-82 and -88
- Install the EXCV cover.

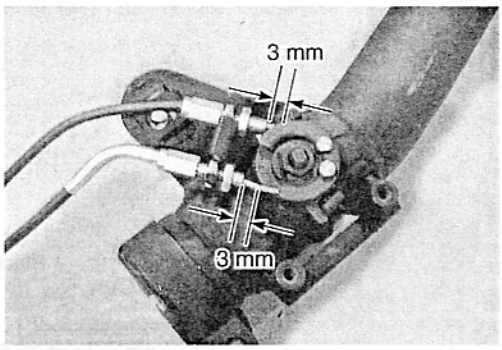

- Install the muffler joint pipe ① together with the muffler body ②. ☞4-88

Exhaust pipe connector bolt: 23 N·m (2.3 kgf·m, 16.5 lb-ft)

Muffler mounting bolt: 23 N·m (2.3 kgf·m, 16.5 lb-ft)

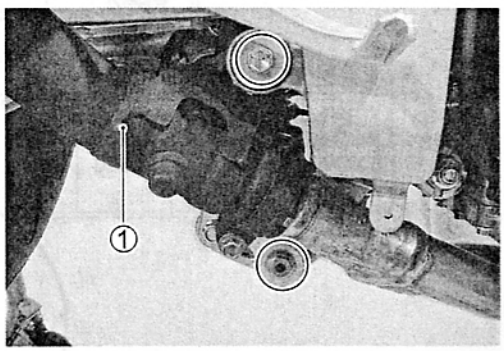

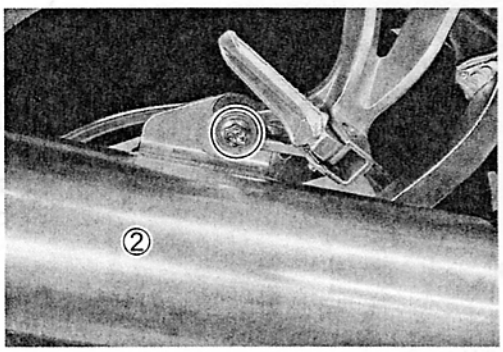

- Connect the No.1 and No.2 cables to the EXCVA pulley. ☞4-80 and-88
- Adjust the No.2 cable adjuster thread length Ⓐ. ☞4-80 and -88
- Install the EXCVA pulley to its shaft. ☞4-80

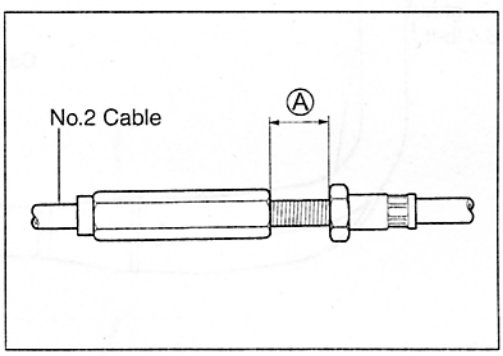

⚠ CAUTION

The cable slots of EXCVA pulley must be located to forward (adjustment position). ☞4-79

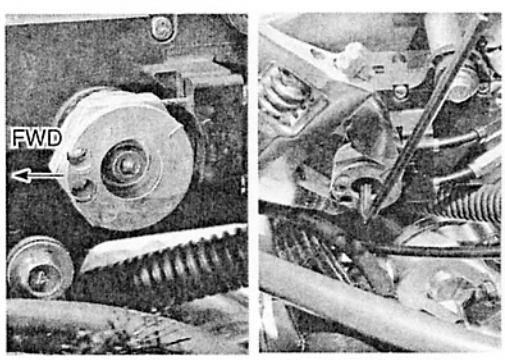

- Tighten the EXCVA pulley mounting bolt to the specified torque. ☞4-81

EXCVA pulley mounting bolt: 5 N·m (0.5 kgf·m, 3.5 lb-ft)

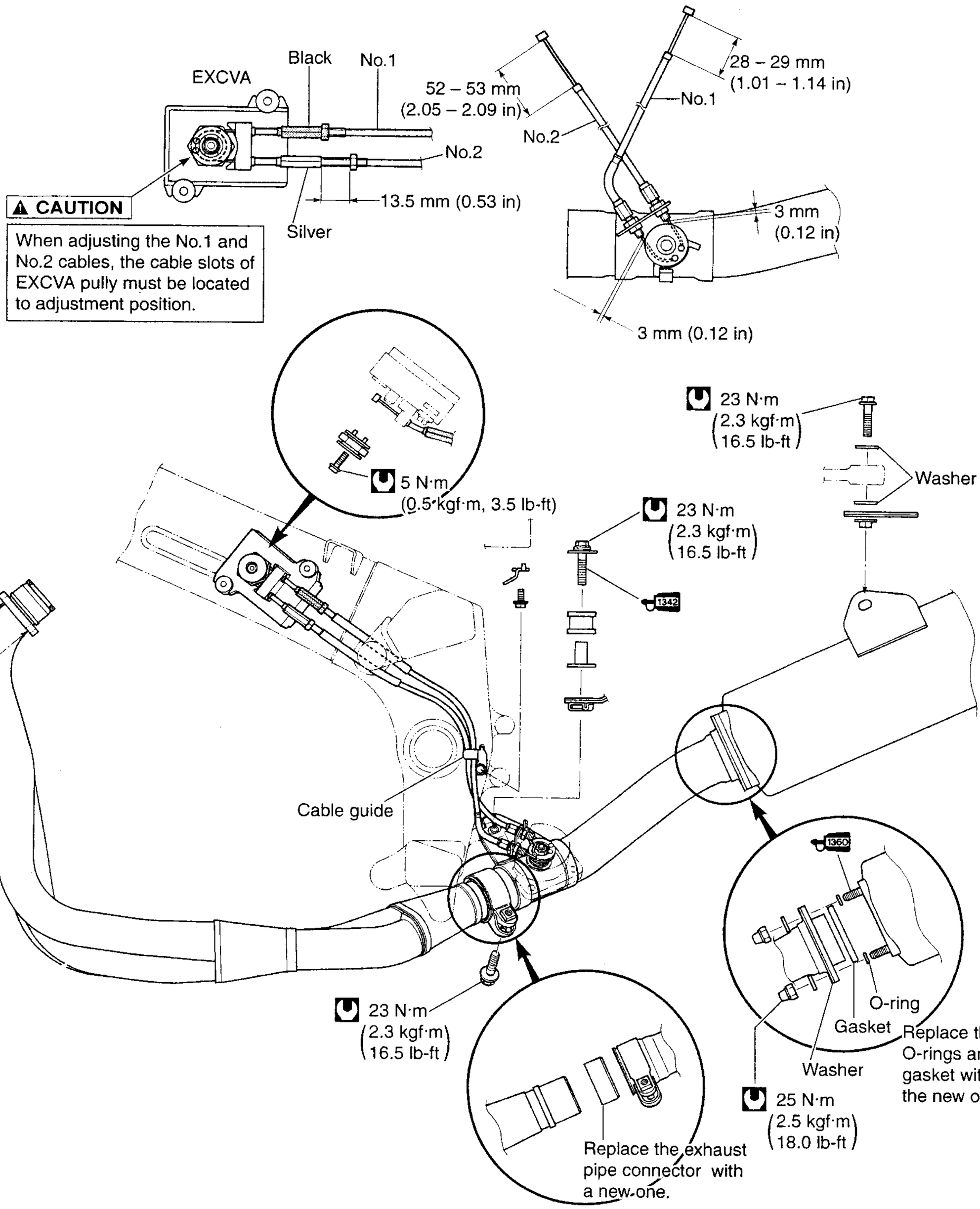
EXCVA
Black
No.1
No.2
52 – 53 mm
(2.05 – 2.09 in)
13.5 mm (0.53 in)
Silver
28 – 29 mm
(1.01 – 1.14 in)
No.1
No.2
3 mm
(0.12 in)
3 mm (0.12 in)
CAUTION
When adjusting the No.1 and No.2 cables, the cable slots of EXCVA pully must be located to adjustment position.
5 N·m
(0.5 kgf·m, 3.5 lb-ft)
23 N·m
(2.3 kgf·m)
16.5 lb-ft)
Washer
23 N·m
(2.3 kgf·m)
16.5 lb-ft)
1342
23 N·m
(2.3 kgf·m)
16.5 lb-ft)
Cable guide
1360
O-ring
Gasket
Replace the O-rings and gasket with the new ones.
Washer
25 N·m
(2.5 kgf·m)
18.0 lb-ft)
Replace the exhaust pipe connector with a new one.

SENSORS

IAP SENSOR INSPECTION

The intake air pressure sensor is located at the rear side of the air cleaner box. (☞ 4-38)

IAP SENSOR REMOVAL/INSTALLATION

- Lift and support the fuel tank. (☞ 4-56)
- Remove the IAP sensor mounting screw ① and disconnect the coupler ② and vacuum hose ③.
- Installation is in the reverse order of removal.

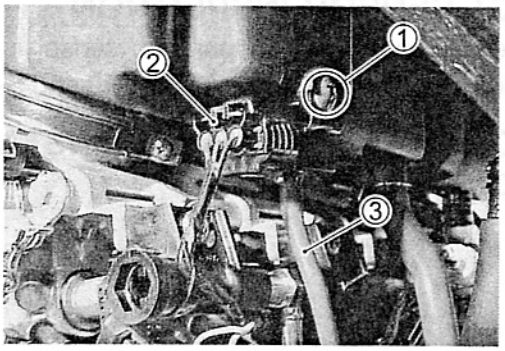

TP SENSOR INSPECTION

The throttle position sensor is installed on the No.4 throttle body. (☞ 4-40)

TP SENSOR REMOVAL/INSTALLATION

- Lift and support the fuel tank. (☞ 4-56)
- Remove the TP sensor setting screw ① and disconnect its coupler.
- Install the TP sensor to the No.4 throttle body. Refer to page 4-30 for TP sensor setting procedure.

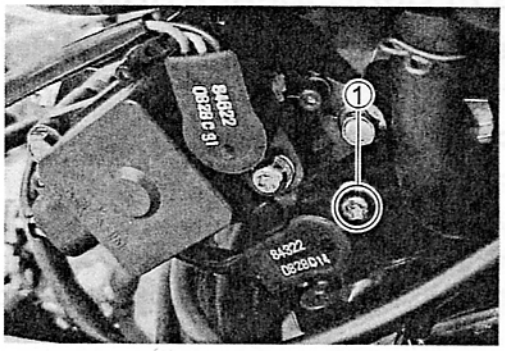

CKP SENSOR INSPECTION

The signal rotor is mounted on the right end of the crankshaft, and the crankshaft position sensor (Pick-up coil) is installed on the right side of the middle crankcase. (☞ 4-37)

CKP SENSOR REMOVAL/INSTALLATION

(☞ 3-23 and -82)

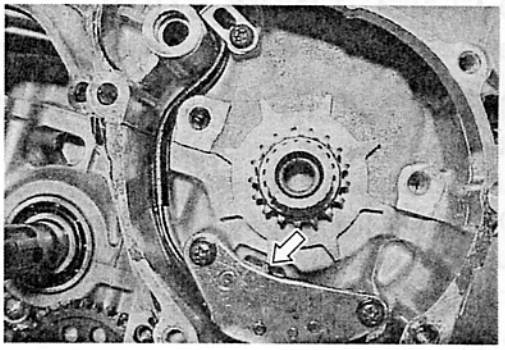

CMP SENSOR INSPECTION

The signal rotor is installed on the intake camshaft, and the camshaft position sensor (Pick-up coil) is installed on the cylinder head cover. (☞ 4-36)

CMP SENSOR REMOVAL/INSTALLATION

- Lift and support the fuel tank. (☞ 4-56)
- Remove the air cleaner box. (☞ 4-66)
- Disconnect the coupler ① and remove the CMP sensor. Installation is in the reverse order of removal.

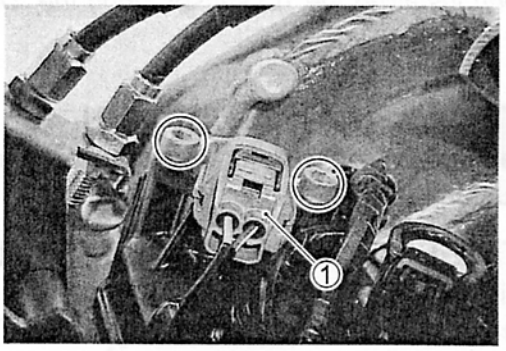

IAT SENSOR INSPECTION

The intake air temperature sensor is installed at the right side of the air cleaner box. (☞ 4-43)

IAT SENSOR REMOVAL/INSTALLATION

- Lift and support the fuel tank. (☞ 4-56)
- Disconnect the IAT sensor coupler ① and remove the IAT sensor from the air cleaner box.
- Installation is in the reverse order of removal.

IAT sensor: 18 N·m (1.8 kgf·m, 13.0 lb-ft)

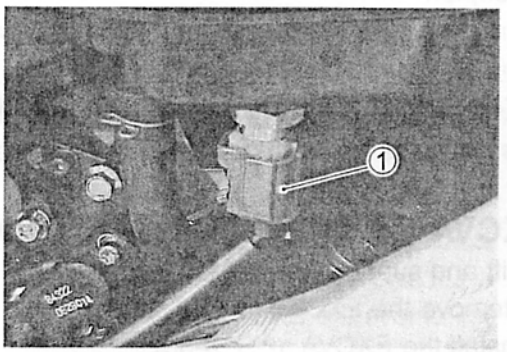

ECT SENSOR INSPECTION

The engine coolant temperature sensor is installed at the rear side of the cylinder head. (☞ 4-42 and 5-8)

ECT SENSOR REMOVAL/INSTALLATION

(☞ 5-8 and -9)

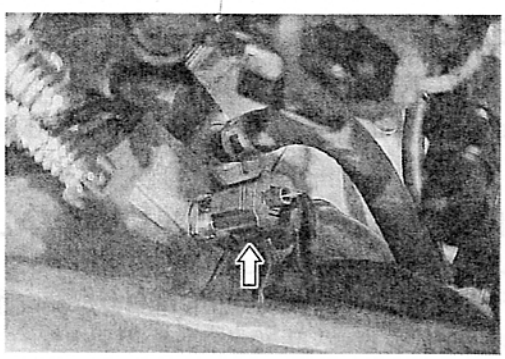

AP SENSOR INSPECTION

The atmospheric pressure sensor is located over the ECM. (☞ 4-44)

AP SENSOR REMOVAL/INSTALLATION

- Remove the front seat. (☞ 6-6)
- Disconnect the coupler ①.
- Remove the AP sensor.
- Installation is in the reverse order of removal.

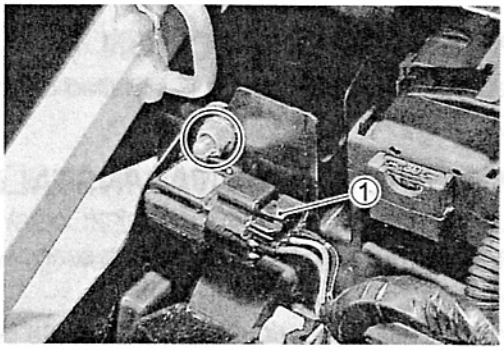

TO SENSOR INSPECTION

The tip over sensor is located in ahead of the battery holder.

TO SENSOR REMOVAL/INSTALLATION

- Remove the front seat. (☞ 6-6)
- Lift and support the fuel tank. (☞ 4-56)
- Disconnect the coupler ① and remove the TO sensor from the fuel tank bracket.
- Installation is in the reverse order of removal.

NOTE:

When installing the TO sensor, bring the "UPPER" letter on it to the top.

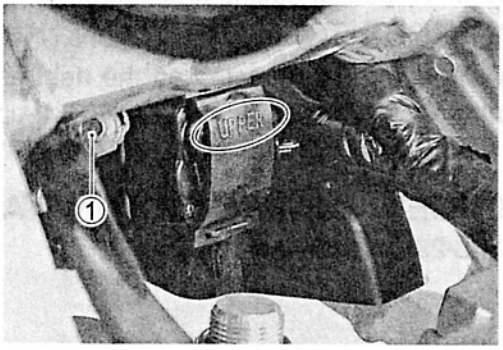

STP SENSOR INSPECTION

The secondary throttle position sensor is installed on the STV actuator. (☞ 4-48)

STP SENSOR REMOVAL/INSTALLATION

- Lift and support the fuel tank. (☞ 4-56)
- Remove the STP sensor setting screw ① and disconnect its coupler.
- Install the STP sensor to the STV actuator. Refer to page 4-73 for STP sensor setting procedure.

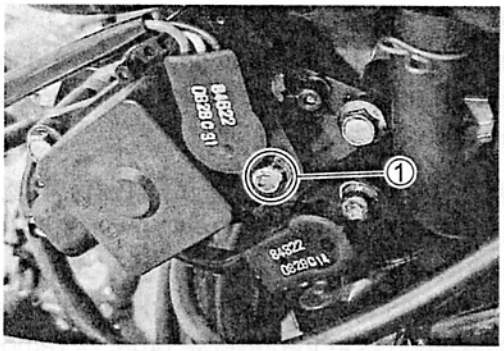

EXCVA POSITION SENSOR INSPECTION

The EXCVA is mounted on the right side of the main frame. (☞ 4-53)

EXCVA REMOVAL/INSTALLATION

- Lift and support the fuel tank. (☞ 4-56)
- Remove the EXCVA. (☞ 4-79)
- Install the EXCVA. (☞ 4-80)

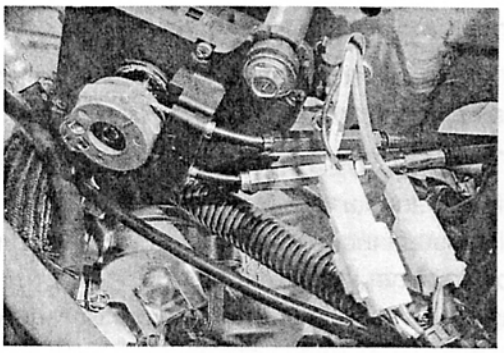

COOLING AND LUBRICATION SYSTEM

CONTENTS

ENGINE COOLANT 5- 2
COOLING CIRCUIT 5- 3
COOLING CIRCUIT INSPECTION 5- 3
RADIATOR AND WATER HOSES 5- 4
RADIATOR REMOVAL 5- 4
RADIATOR CAP INSPECTION 5- 4
RADIATOR INSPECTION AND CLEANING 5- 4
RADIATOR REMOUNTING 5- 5
WATER HOSE INSPECTION 5- 5
COOLING FAN 5- 6
REMOVAL 5- 6
INSPECTION 5- 6
INSTALLATION 5- 6
COOLING FAN THERMO-SWITCH 5- 6
REMOVAL 5- 6
INSPECTION 5- 7
INSTALLATION 5- 7
COOLING FAN CONTROL RELAY 5- 7
INSPECTION 5- 7
ENGINE COOLANT TEMPERATURE SENSOR 5- 8
REMOVAL 5- 8
INSPECTION 5- 8
INSTALLATION 5- 9
THERMOSTAT 5- 9
REMOVAL 5- 9
INSPECTION 5-10
INSTALLATION 5-10
WATER PUMP 5-11
REMOVAL AND DISASSEMBLY 5-11
INSPECTION 5-14
REASSEMBLY AND INSTALLATION 5-15
LUBRICATION SYSTEM 5-18
OIL PRESSURE 5-18
OIL FILTER 5-18
OIL PRESSURE REGULATOR 5-18
OIL STRAINER 5-18
OIL JET 5-18
OIL PUMP 5-18
OIL PRESSURE SWITCH 5-18
OIL COOLER 5-19
ENGINE LUBRICATION SYSTEM CHART 5-20
ENGINE LUBRICATION SYSTEM 5-21

ENGINE COOLANT

At the time of manufacture, the cooling system is filled with a 50:50 mixture of distilled water and ethylene glycol anti-freeze. This 50:50 mixture will provide the optimum corrosion protection and excellent heat protection, and will protect the cooling system from freezing at temperatures above –31°C (–24°F).
If the motorcycle is to be exposed to temperatures below –31°C (–24°F), this mixing ratio should be increased up to 55% or 60% according to the figure.

Anti-freeze density	Freezing point
50%	–30°C (–24°F)
55%	–40°C (–44°F)
60%	–55°C (–67°F)

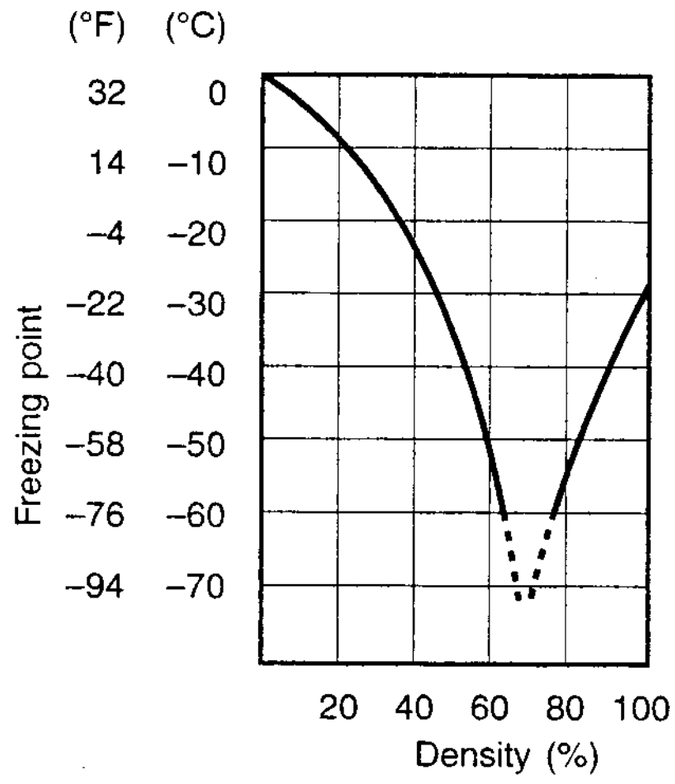

Fig.1 Engine coolant density-freezing point curve.

⚠ CAUTION

- *** Use a high quality ethylene glycol base anti-freeze, mixed with distilled water. Do not mix an alcohol base anti-freeze and different brands of anti-freeze.**
- *** Do not put in more than 60% anti-freeze or less than 50%. (Refer to Right figure.)**
- *** Do not use a radiator anti-leak additive.**

50% Engine coolant including reserve tank capacity

Anti-freeze	1 200 ml (3.1/2.6 US/Imp. pt)
Water	1 200 ml (3.1/2.6 US/Imp. pt)

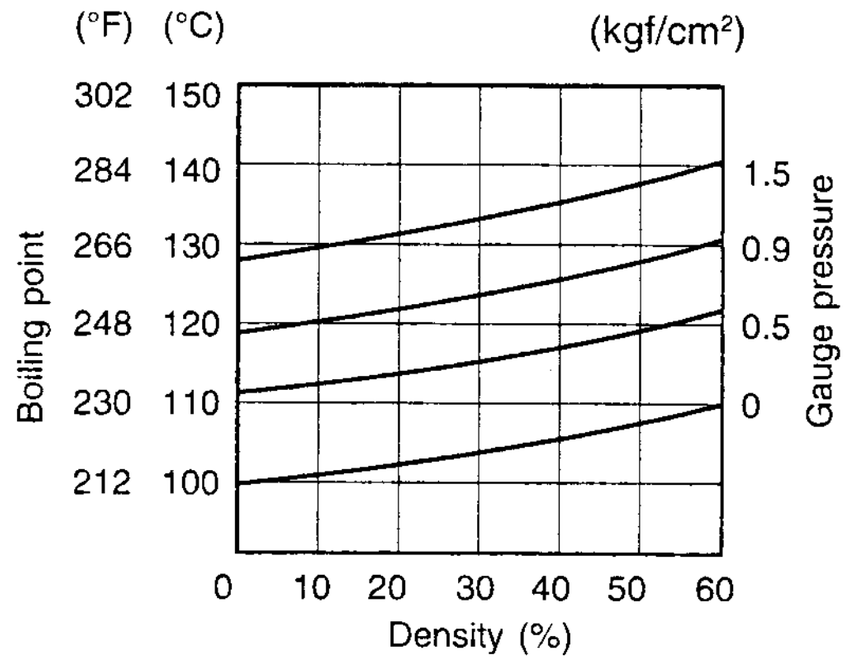

Fig.2 Engine coolant density-boiling point curve.

⚠ WARNING

- *** You can be injured by scalding fluid or steam if you open the radiator cap when the engine is hot. After the engine cools, wrap a thick cloth around cap and carefully remove the cap by turning it a quarter turn to allow pressure to escape and then turn the cap all the way off.**
- *** The engine must be cool before servicing the cooling system.**
- *** Coolant is harmful;**
  - **If it comes in contact with skin or eyes, flush with water.**
  - **If swallowed accidentally, induce vomiting and call physician immediately.**
  - **Keep it away from children.**

COOLING CIRCUIT

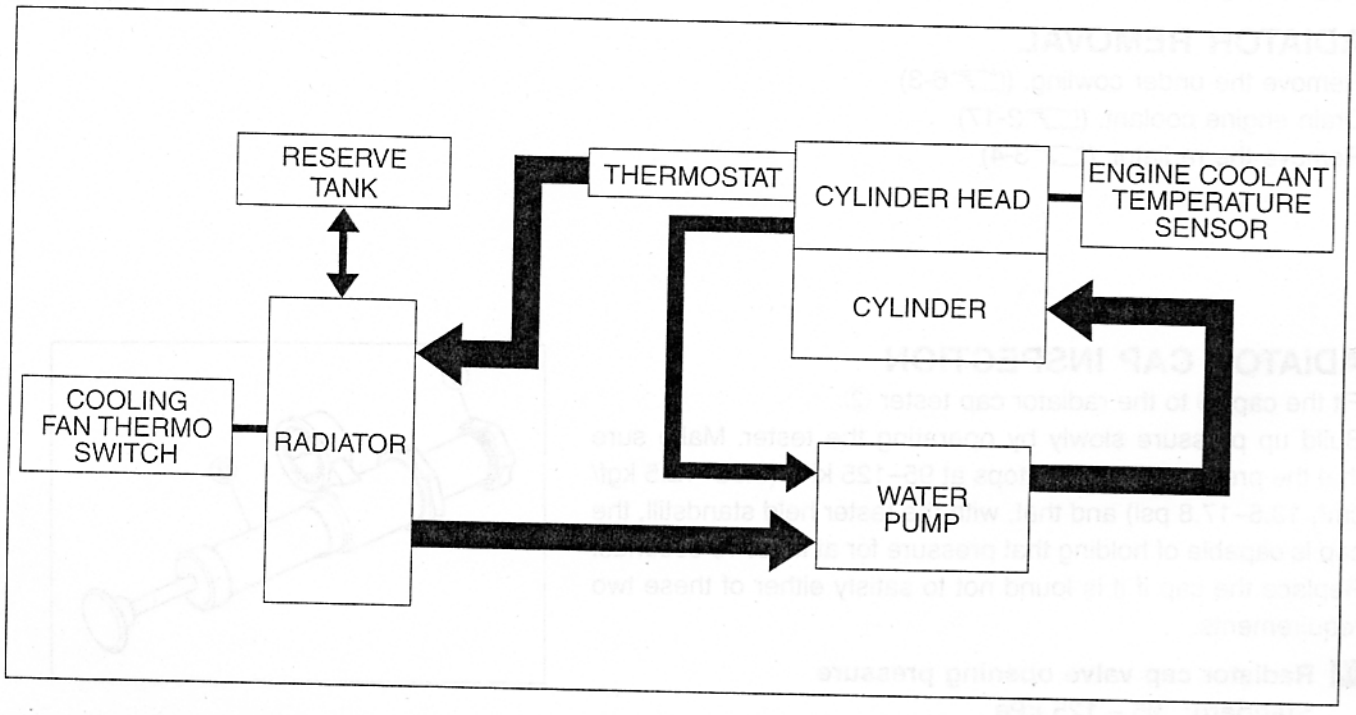

COOLING CIRCUIT INSPECTION

Before removing the radiator and draining the engine coolant, inspect the cooling circuit for tightness.

- Remove the under cowling. (☞6-3)
- Remove the radiator cap ① and connect the tester ② to the filler.

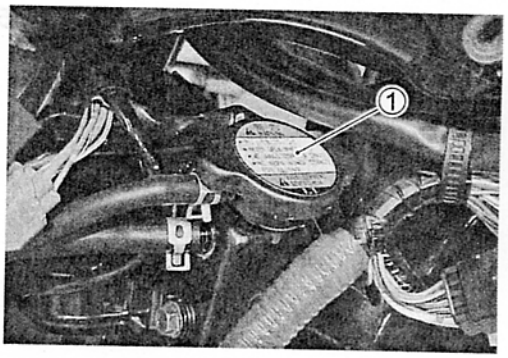

⚠ WARNING

Do not remove the radiator cap when the engine is hot.

- Give a pressure of about 120 kPa (1.2 kgf/cm², 17 psi) and see if the system holds this pressure for 10 seconds.
- If the pressure should fall during this 10-second interval, it means that there is a leaking point in the system. In such a case, inspect the entire system and replace the leaking component or part.

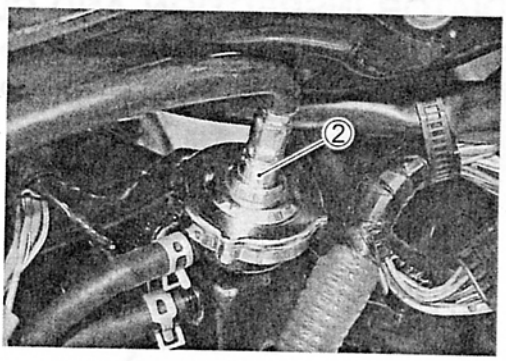

⚠ WARNING

When removing the radiator cap tester, put a rag on the filler to prevent spouting of engine coolant.

⚠ CAUTION

Do not allow the pressure to exceed the radiator cap release pressure, or the radiator can be damaged.

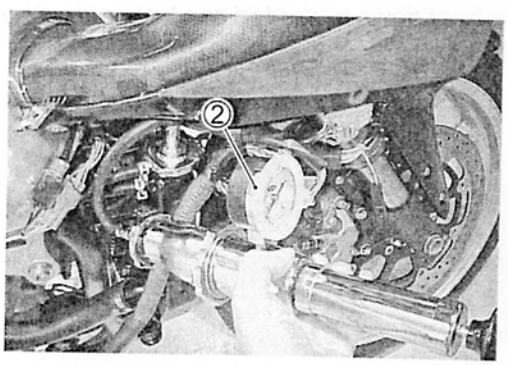

RADIATOR AND WATER HOSES

RADIATOR REMOVAL

- Remove the under cowling. (☞6-3)
- Drain engine coolant. (☞2-17)
- Remove the radiator. (☞3-4)

RADIATOR CAP INSPECTION

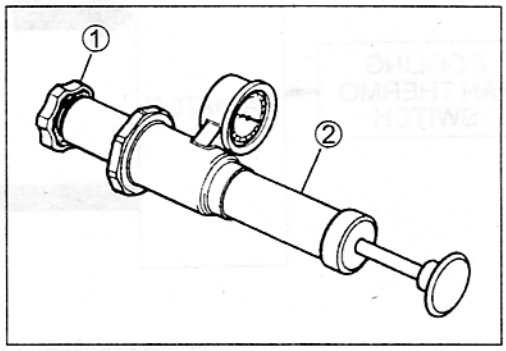

- Fit the cap ① to the radiator cap tester ②.
- Build up pressure slowly by operating the tester. Make sure that the pressure build-up stops at 95–125 kPa (0.95–12.5 kgf/cm², 13.5–17.8 psi) and that, with the tester held standstill, the cap is capable of holding that pressure for at least 10 seconds.
- Replace the cap if it is found not to satisfy either of these two requirements.

DATA Radiator cap valve opening pressure
Standard: 95 – 125 kPa
(0.95 – 1.25 kgf/cm², 13.5 – 17.8 psi)

RADIATOR INSPECTION AND CLEANING

- Road dirt or trash stuck to the fins must be removed.
- Use of compressed air is recommended for this cleaning.

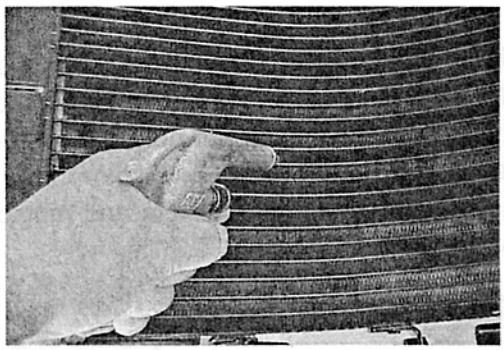

- Fins bent down or dented can be repaired by straightening them with the blade of a small screwdriver.

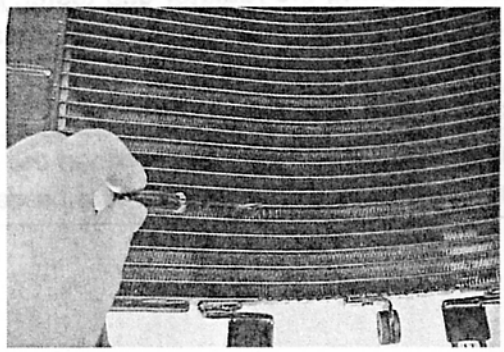

RADIATOR REMOUNTING

- Install the radiator.
- Route the radiator hoses. (☞8-19)
- Pour engine coolant. (☞2-17)
- Bleed the air from the cooling circuit. (☞2-18)
- Install the under cowling.

WATER HOSE INSPECTION

- Remove the under cowling. (☞6-3)
- Any water hose found in a cracked condition or flattened must be replaced.
- Any leakage from the connecting section should be corrected by proper tightening.

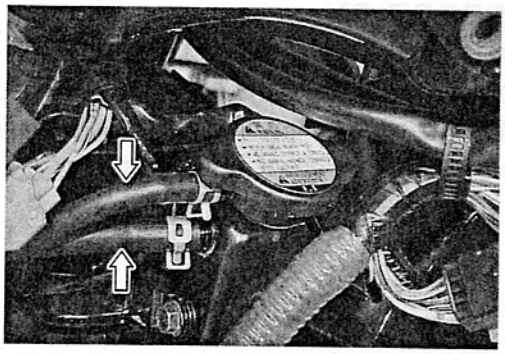

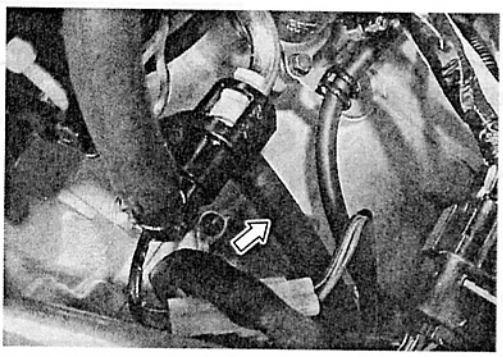

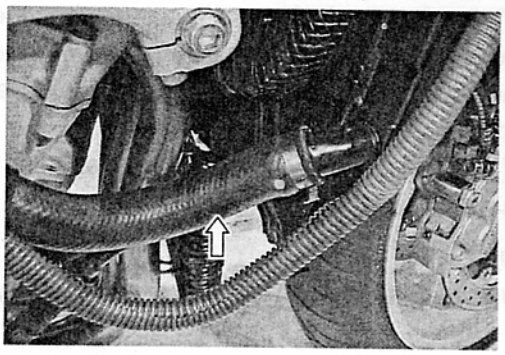

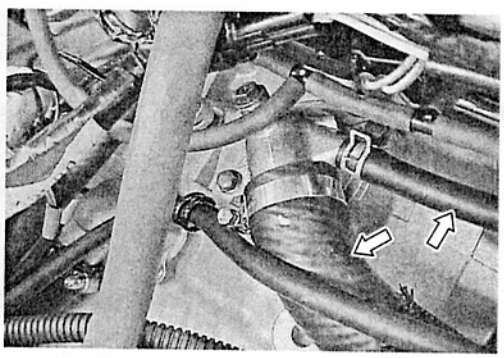

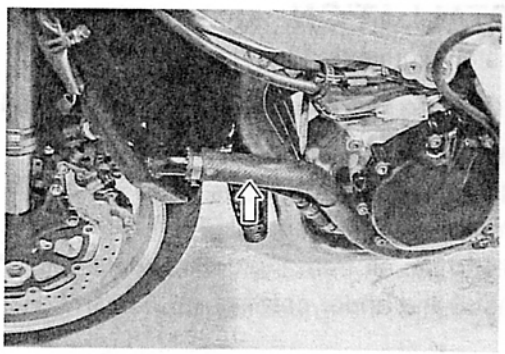

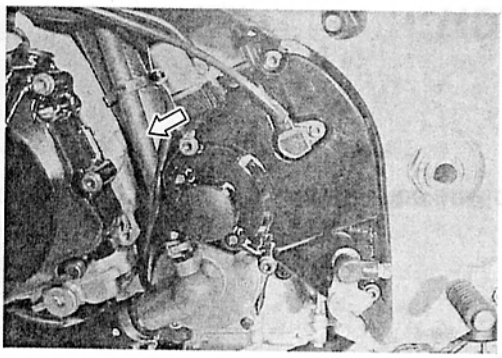

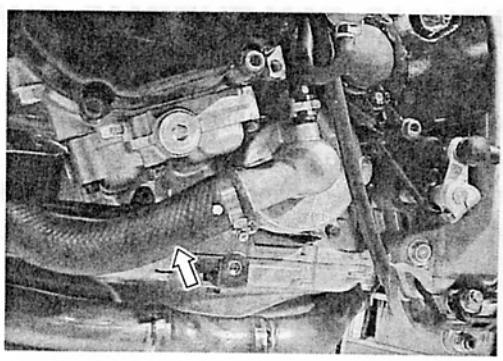

COOLING FAN

REMOVAL

- Remove the under cowling. (☞6-3)
- Drain engine coolant. (☞2-17)
- Remove the radiator. (☞3-4)
- Remove the cooling fan.

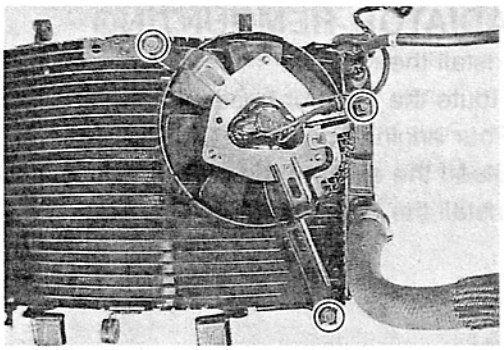

INSPECTION

- Remove the under cowling. (☞6-3)
- Disconnect the cooling fan lead wire coupler ①.
- Test the cooling fan motor for load current with an ammeter connected as shown in the illustration.

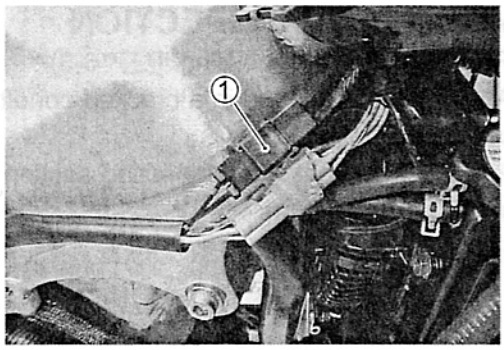

- The voltmeter is for making sure that the battery applies 12 volts to the motor. With the motor with electric motor fan running at full speed, the ammeter should be indicating not more than 5 amperes.
- If the fan motor does not turn, replace the motor assembly with a new one.

NOTE:
When making above test, it is not necessary to remove the cooling fan.

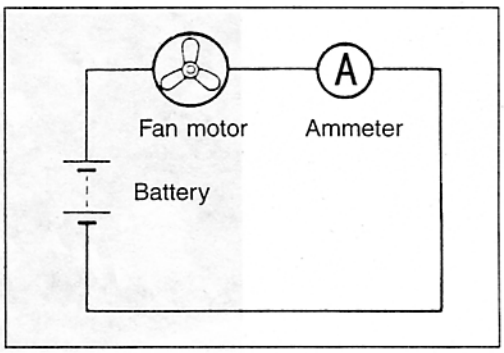

INSTALLATION

- Install the cooling fan.

Cooling fan mounting bolt: 8 N·m (0.8 kgf·m, 6.0 lb-ft)

- Install the radiator.
- Route the radiator hoses. (☞8-19)
- Pour engine coolant. (☞2-17)
- Bleed the air from the cooling circuit. (☞2-18)
- Install the under cowling. (☞6-3)

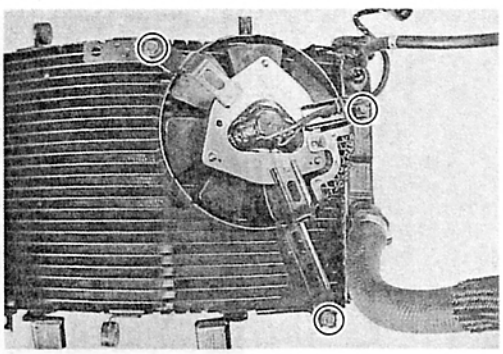

COOLING FAN THERMO-SWITCH

REMOVAL

- Remove the under cowling. (☞6-3)
- Drain engine coolant. (☞2-17)
- Disconnect the cooling fan thermo-switch lead wire coupler ①.
- Remove the cooling fan thermo-switch ②.

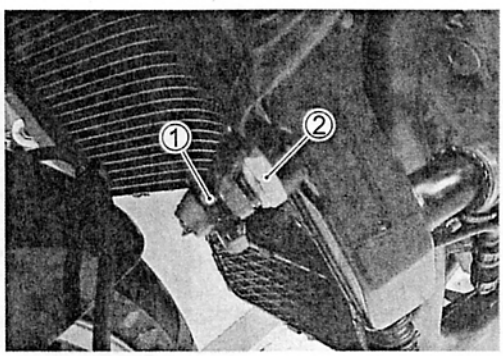

INSPECTION

- Check the thermo-switch closing or opening temperatures by testing it at the bench as shown in the figure. Connect the thermo-switch to a circuit tester and place it in the oil contained in a pan, which is placed on a stove.
- Heat the oil to raise its temperature slowly, and read the column thermometer when the switch closes or opens.

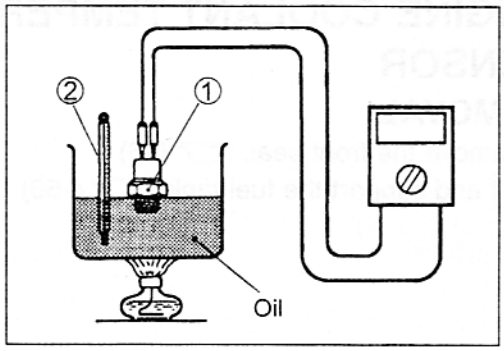

TOOL 09900-25008: Multi circuit tester set

Tester knob indication: Continuity test (•))))

DATA Cooling fan thermo-switch operating temperature
Standard (OFF→ON): Approx. 105°C (221°F)
(ON→OFF): Approx. 100°C (212°F)

⚠ CAUTION

*** Take special care when handling the thermo-switch. It may cause damage if it gets a sharp impact.**
*** Do not contact the cooling fan thermo-switch ① and the column thermometer ② with a pan.**

INSTALLATION

- Install the O-ring ①.
- Tighten the cooling fan thermo-switch to the specified torque.

Cooling fan thermo-switch: 17 N·m
(1.7 kgf·m, 12.5 lb-ft)

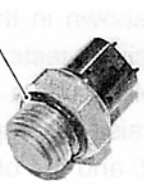

- Pour engine coolant. (☞2-17)
- Install the under cowling. (☞6-3)

COOLING FAN CONTROL RELAY

INSPECTION

Cooling fan control relay is located in ahead of the battery.

- Remove the front seat.
- Remove the cooling fan relay.

First, check the insulation between ① and ② terminals with pocket tester. Then apply 12 volts to ③ and ④ terminals, ⊕ to ③ and ⊖ to ④, and check the continuity between ① and ②.
If there is no continuity, replace it with a new one.

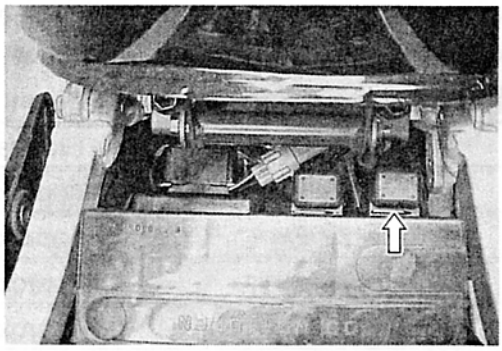

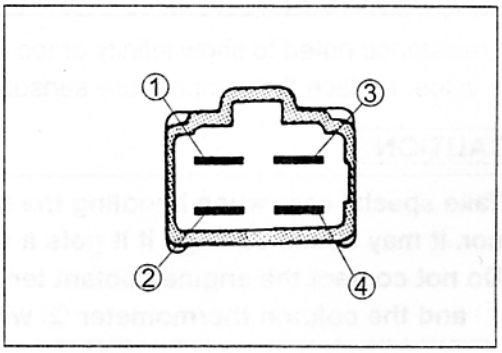

ENGINE COOLANT TEMPERATURE SENSOR

REMOVAL

- Remove the front seat. (☞6-6)
- Lift and support the fuel tank. (☞4-56)

- Disconnect the engine coolant temperature sensor lead wire coupler.
- Keep the motorcycle upright.
- Place a rag under the sensor and remove the engine coolant temperature sensor ①.

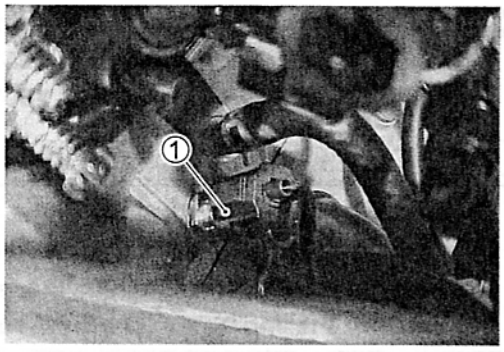

INSPECTION

- Check the engine coolant temperature sensor by testing it at the bench as shown in the figure. Connect the temperature sensor ① to a circuit tester and place it in the oil contained in a pan, which is placed on a stove.
- Heat the oil to raise its temperature slowly and read the column thermometer ② and the ohmmeter.

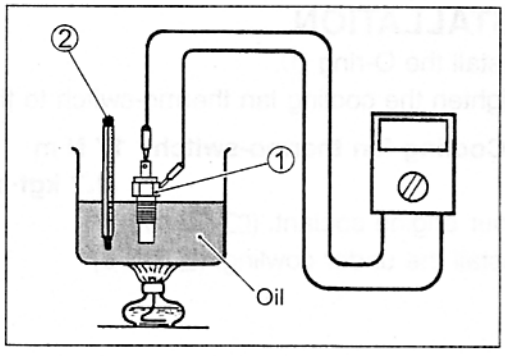

- If the temperature sensor ohmic value does not change in the proportion indicated, replace it with a new one.

DATA Temperature sensor specification

Temperature	Standard resistance
20°C (68°F)	Approx. 2.45 kΩ
50°C (122°F)	Approx. 0.811 kΩ
80°C (176°F)	Approx. 0.318 kΩ
110°C (230°F)	Approx. 0.142 kΩ
130°C (266°F)	Approx. 0.088 kΩ

If the resistance noted to show infinity or too much different resistance value, replace the temperature sensor with a new one.

⚠ CAUTION

*** Take special care when handling the temperature-sensor. It may cause damage if it gets a sharp impact.**
*** Do not contact the engine coolant temperature sensor ① and the column thermometer ② with a pan.**

INSTALLATION

- Tighten the engine coolant temperature sensor to the specified torque.

Engine coolant temperature sensor: 18 N·m (1.8 kgf·m, 13.0 lb-ft)

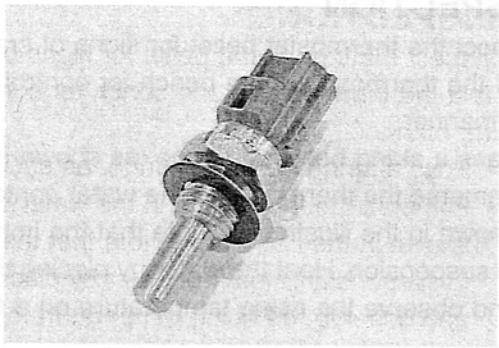

⚠ CAUTION

Take special care when handling the temperature sensor. It may cause damage if it gets a sharp impact.

- Install the fuel tank. (☞4-56)
- Install the front seat.

THERMOSTAT

REMOVAL

- Remove the front seat. (☞6-6)
- Lift and support the fuel tank. (☞4-56)
- Place a rag under the thermostat case.
- Remove the thermostat case.

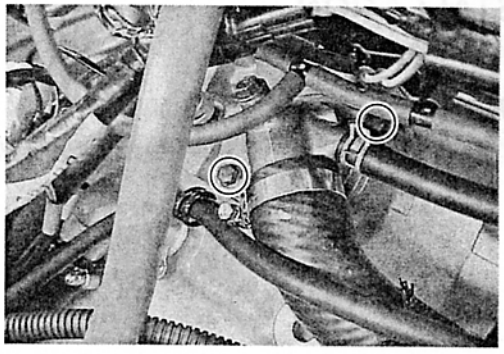

- Remove the thermostat ①.

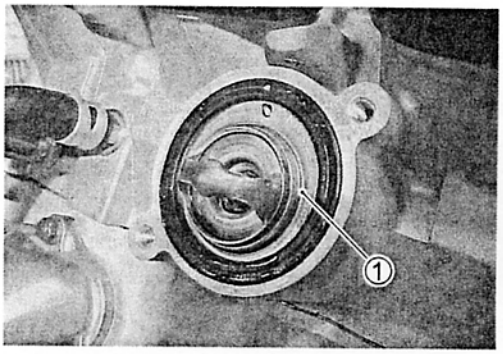

INSPECTION

Inspect the thermostat pellet for signs of cracking.
Test the thermostat at the bench for control action, in the following manner.

- Pass a string between flange, as shown in the illustration.
- Immerse the thermostat in the water contained in a beaker, as shown in the illustration. Note that the immersed thermostat is in suspension. Heat the water by placing the beaker on a stove and observe the rising temperature on a thermometer.

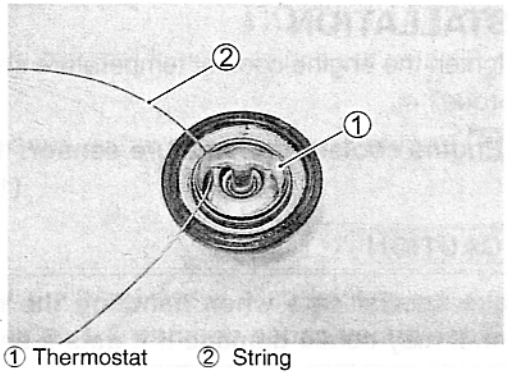

① Thermostat ② String

- Read the thermometer just when opening the thermostat. This reading, which is the temperature level at which the thermostat valve begins to open, should be within the standard value.

DATA Thermostat valve opening temperature
Standard: Approx. 82°C (180°F)

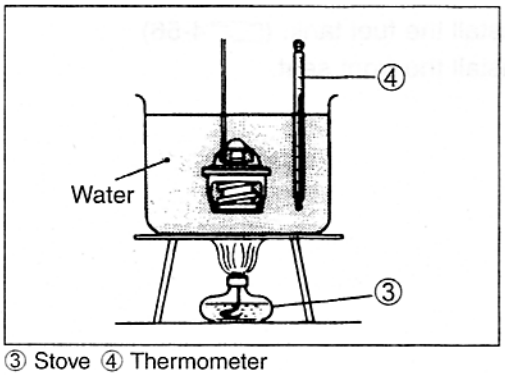

③ Stove ④ Thermometer

- Keep on heating the water to raise its temperature.
- Just when the water temperature reaches specified value, the thermostat valve should have lifted by at least 8.0 mm (0.31 in).

DATA Thermostat valve lift
Standard: Over 8.0 mm at 95°C (Over 0.31 in at 203°F)

- A thermostat failing to satisfy either of the two requirements (start-to-open temperature and valve lift) must be replaced.

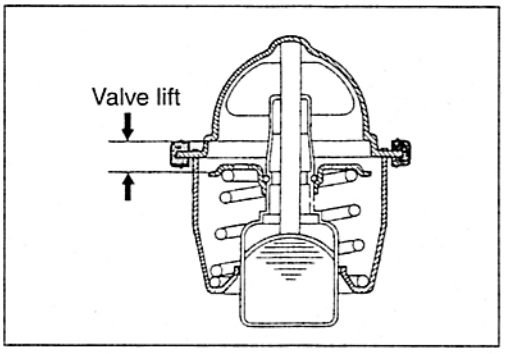

INSTALLATION

- Install the thermostat.

NOTE:
The jiggle valve Ⓐ of the thermostat faces upside.

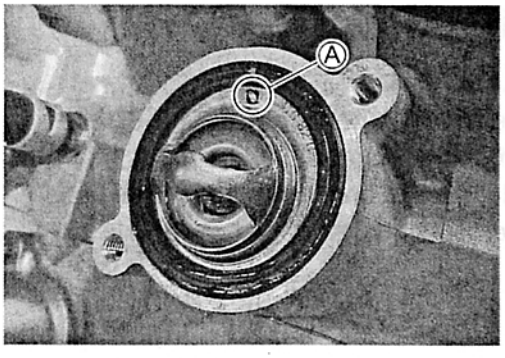

- Install the thermostat case.

NOTE:
Fit the clamp to the thermostat case bolt Ⓐ.

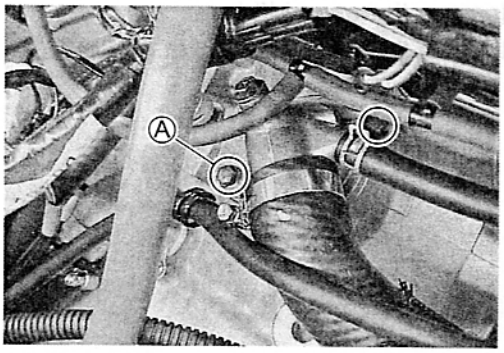

- Tighten the thermostat case bolt to the specified torque.

Thermostat case bolt: 10 N·m (1.0 kgf·m, 7.0 lb-ft)

- Install the fuel tank. (☞4-56)
- Install the front seat.

WATER PUMP

REMOVAL AND DISASSEMBLY

- Remove the under cowling. (☞6-3)
- Drain engine coolant. (☞2-17)
- Drain engine oil. (☞2-12)

NOTE:
Before draining engine oil and engine coolant, inspect engine oil and coolant leakage between the water pump and crankcase. If engine oil is leaking, visually inspect the oil seal and O-ring. If engine coolant is leaking, visually inspect the mechanical seal and seal washer. (☞ 5-14)

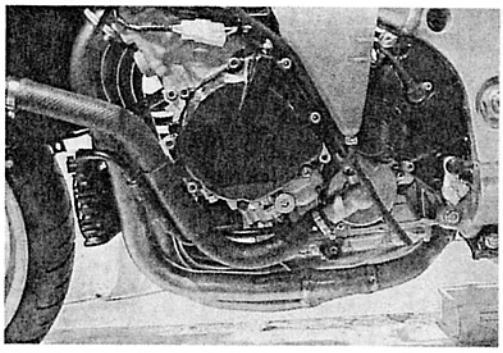

- Remove the reserve tank ①.

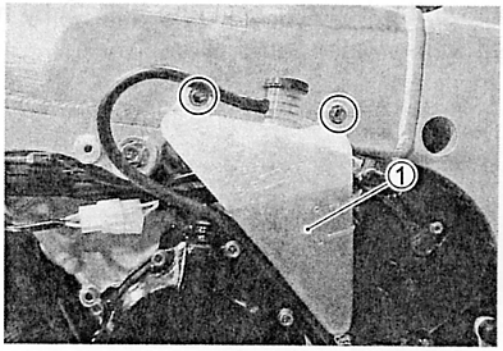

Remove the gearshift lever.
Remove the engine sprocket cover ①.

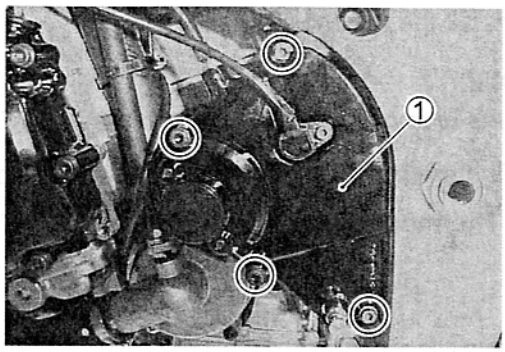

Disconnect the water hoses.

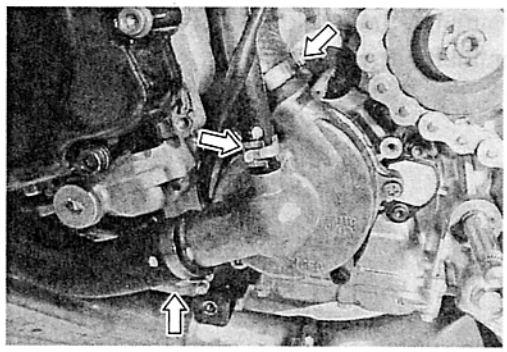

Remove the water pump.

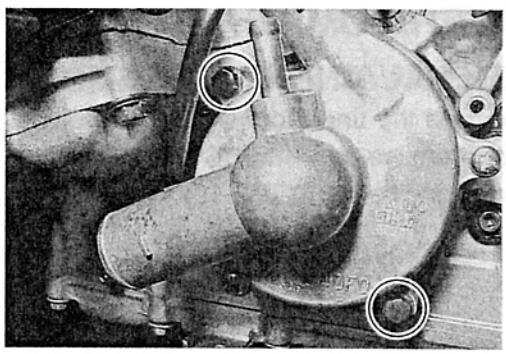

Remove the water pump cover.

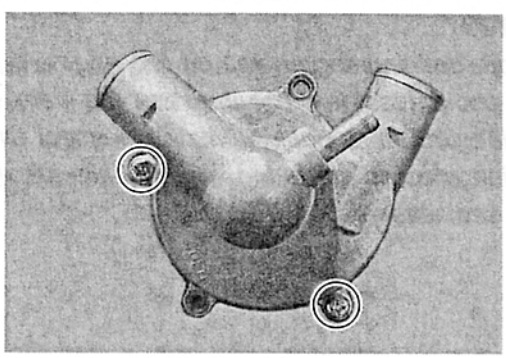

Remove the impeller securing bolt ② by holding the impeller shaft with a water pump pliers.

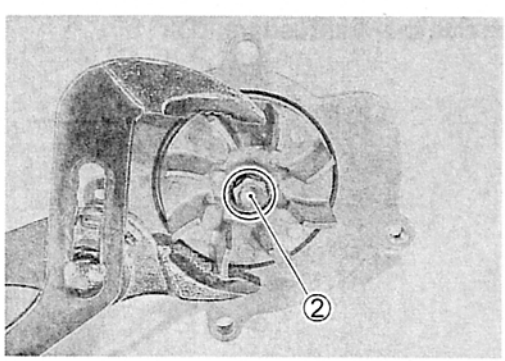

- Remove the mechanical seal ring ① and the rubber seal ② from the impeller.

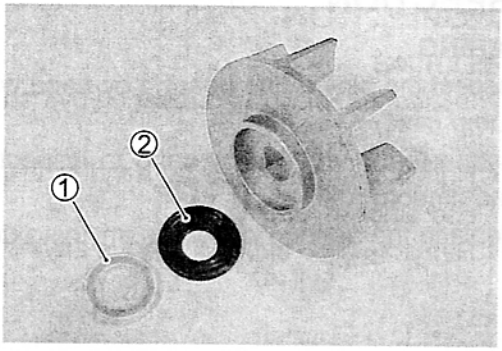

- Remove the impeller shaft ③.

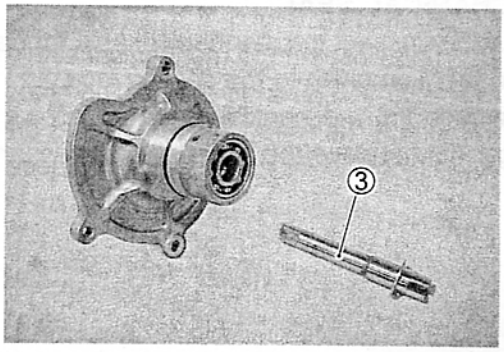

- Remove the bearings using the special tool.

TOOL 09921-20240: Bearing remover set

NOTE:
If no abnormal noise, bearing removal is not necessary.

⚠ CAUTION

The removed bearing must be replaced with a new one.

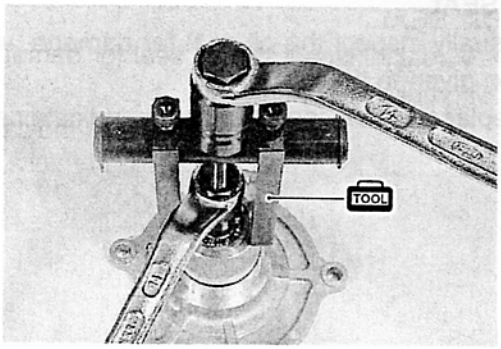

- Remove the mechanical seal using the special tool.

TOOL 09921-20240: Bearing remover set

NOTE:
If no abnormal, the mechanical seal removal is not necessary.

⚠ CAUTION

The removed mechanical seal must be replaced with a new one.

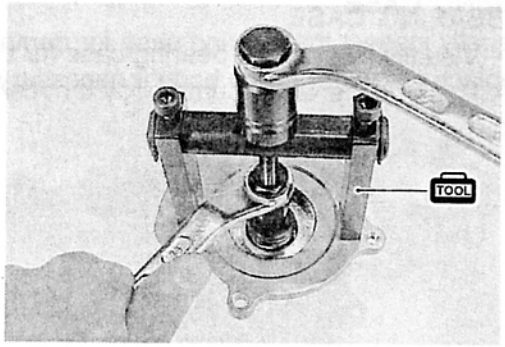

- Remove the oil seal using a suitable bar.

NOTE:
If no abnormal, the oil seal removal is not necessary.

⚠ CAUTION

The removed oil seal must be replaced with a new one.

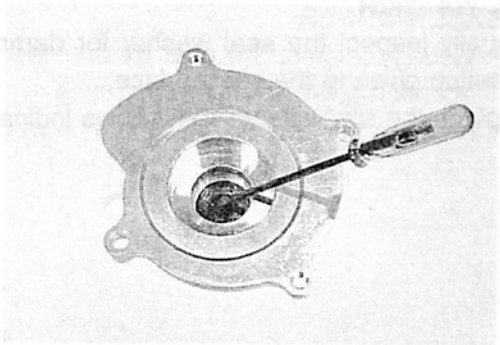

INSPECTION

BEARING

- Inspect the play of the bearing by hand while it is in the water pump case.
- Rotate the inner race by hand to inspect for abnormal noise and smooth rotation.
- Replace the bearing if there is anything unusual.

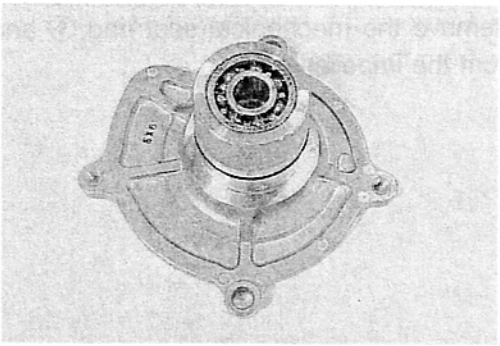

MECHANICAL SEAL

- Visually inspect the mechanical seal for damage, with particular attention given to the sealing face.
- Replace the mechanical seal that shows indications of leakage. Also replace the seal ring if necessary.

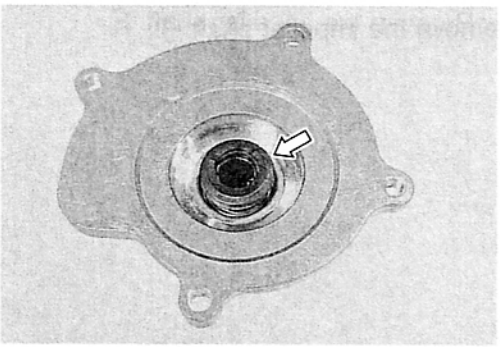

OIL SEAL

- Visually inspect the oil seal for damage, with particular attention given to the lip.
- Replace the oil seal that shows indications of leakage.

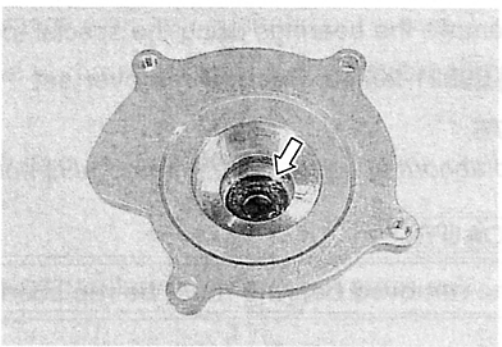

BEARING CASE

- Visually inspect the bearing case for damage.
- Replace the water pump body if necessary.

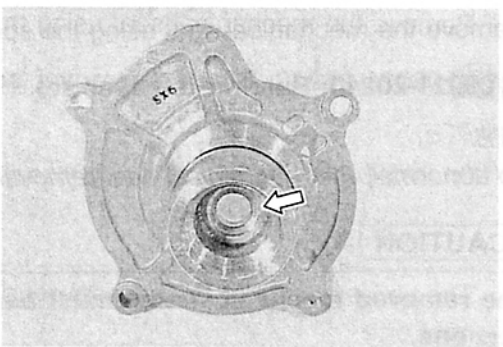

SEAL WASHER

- Visually inspect the seal washer for damage, with particular attention given to the sealing face.
- Replace the seal washer that shows indications of leakage.

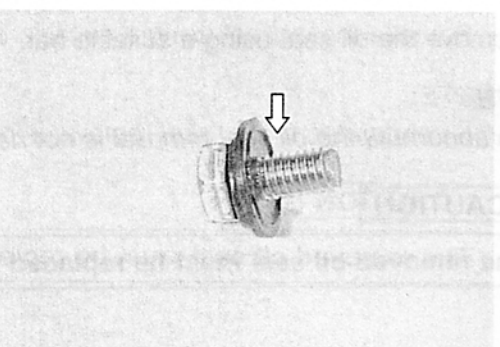

REASSEMBLY AND INSTALLATION

- Install the oil seal using the special tool.

TOOL 09913-70210: Bearing installer set

NOTE:
The stamped mark on the oil seal faces outside.

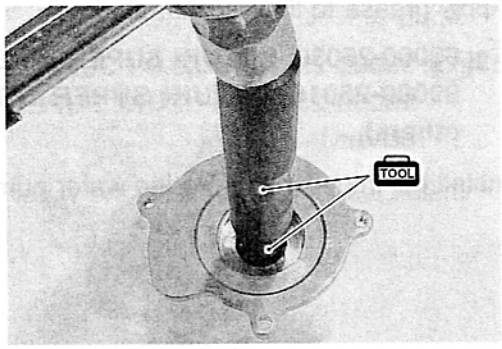

- Apply a small quantity of the SUZUKI SUPER GREASE "A" to the oil seal lip.

A 99000-25030: SUZUKI SUPER GREASE "A" (For USA)
99000-25010: SUZUKI SUPER GREASE "A" (For the others)

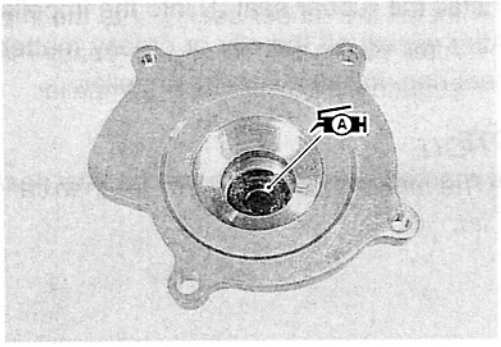

- Install the new mechanical seal using a suitable size socket wrench.

NOTE:
The new mechanical seal has been applied the sealer Ⓐ.

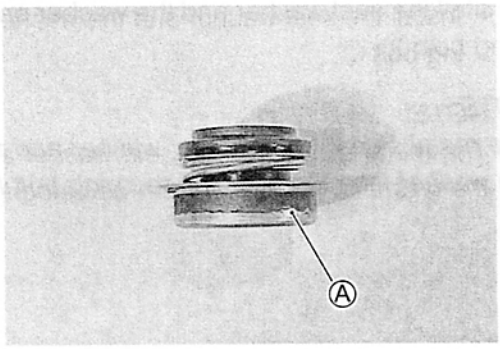

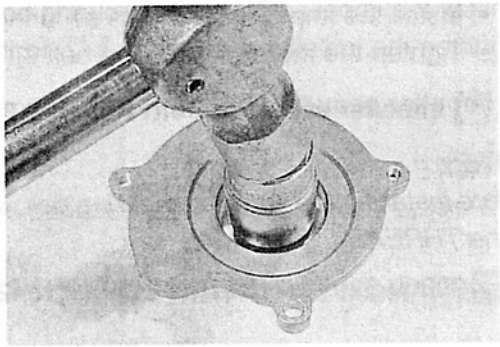

- Install the new bearings using the special tool.

TOOL 09913-70210: Bearing installer set

NOTE:
The stamped mark on the bearing faces crankcase side.

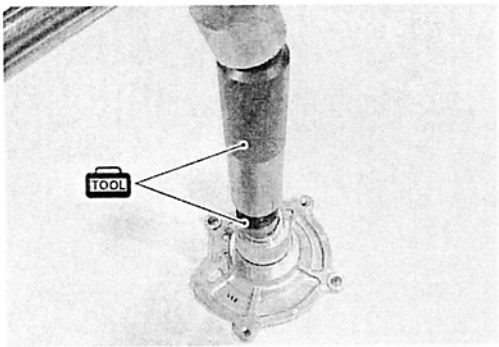

- Apply grease to the impeller shaft.

99000-25030: SUZUKI SUPER GREASE "A" (For USA)
99000-25010: SUZUKI SUPER GREASE "A" (For the others)

- Install the impeller shaft to the water pump body.

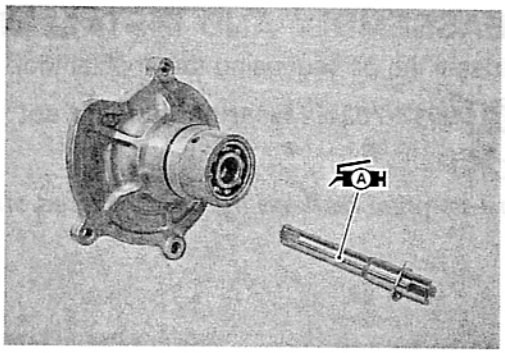

- Install the rubber seal ① into the impeller.
- After wiping off the oily or greasy matter from the mechanical seal ring, install it into the impeller.

NOTE:
The marked side Ⓐ of the mechanical seal ring faces the impeller.

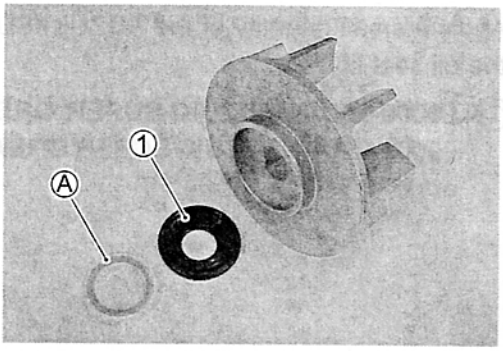

- Install the seal washer and the washer onto the impeller securing bolt ②.

NOTE:
The metal side Ⓑ of the seal washer and the convex side Ⓒ of the washer face the impeller securing bolt head.

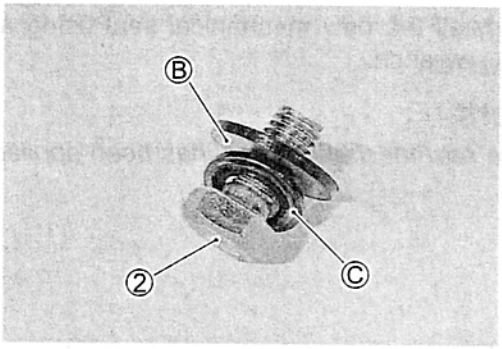

- Install the impeller ③ and its securing bolt ② onto the shaft.
- Tighten the impeller securing bolt ② to the specified torque.

Impeller securing bolt: 8 N·m (0.8 kgf·m, 6.0 lb-ft)

NOTE:
Before installing the impeller securing bolt, apply a small quantity of the THREAD LOCK "1342" to it.

1342 99000-32050: THREAD LOCK "1342"

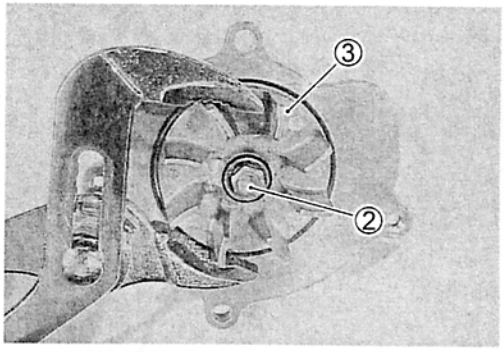

- Install the new O-rings, ① and ②.

⚠ CAUTION

Use the new O-rings to prevent engine coolant leakage.

NOTE:
* *Apply engine coolant to the O-ring ①.*
* *Apply grease to the O-ring ②.*

99000-25030: SUZUKI SUPER GREASE "A" (For USA)
99000-25010: SUZUKI SUPER GREASE "A" (For the others)

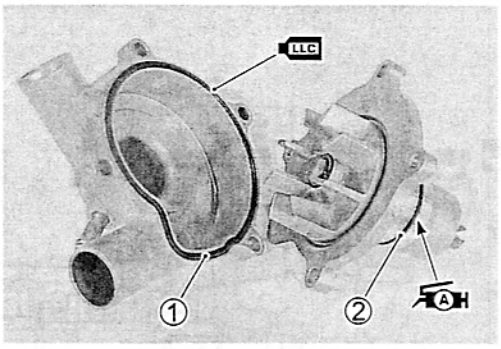

- Tighten the water pump cover screws to the specified torque.

Water pump cover screw: 6 N·m (0.6 kgf·m, 4.5 lb-ft)

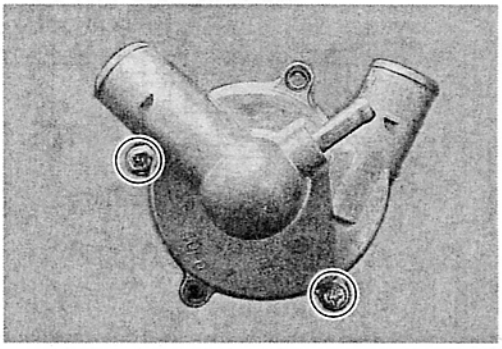

- Install the water pump and tighten its mounting bolts to the specified torque.

Water pump mounting bolt: 10 N·m (1.0 kgf·m, 7.0 lb-ft)

NOTE:
Set the water pump shaft end Ⓐ to the oil pump shaft Ⓑ as shown in the following illustration. (☞ 5-18)

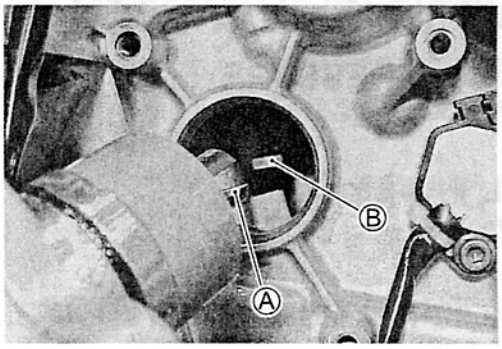

- Connect the water hoses. (☞8-19)
- Install the engine sprocket cover.
- Install the gearshift lever.
- Install the reserve tank.
- Pour engine coolant. (☞2-17)
- Pour engine oil. (☞2-12)
- Install the under cowling.

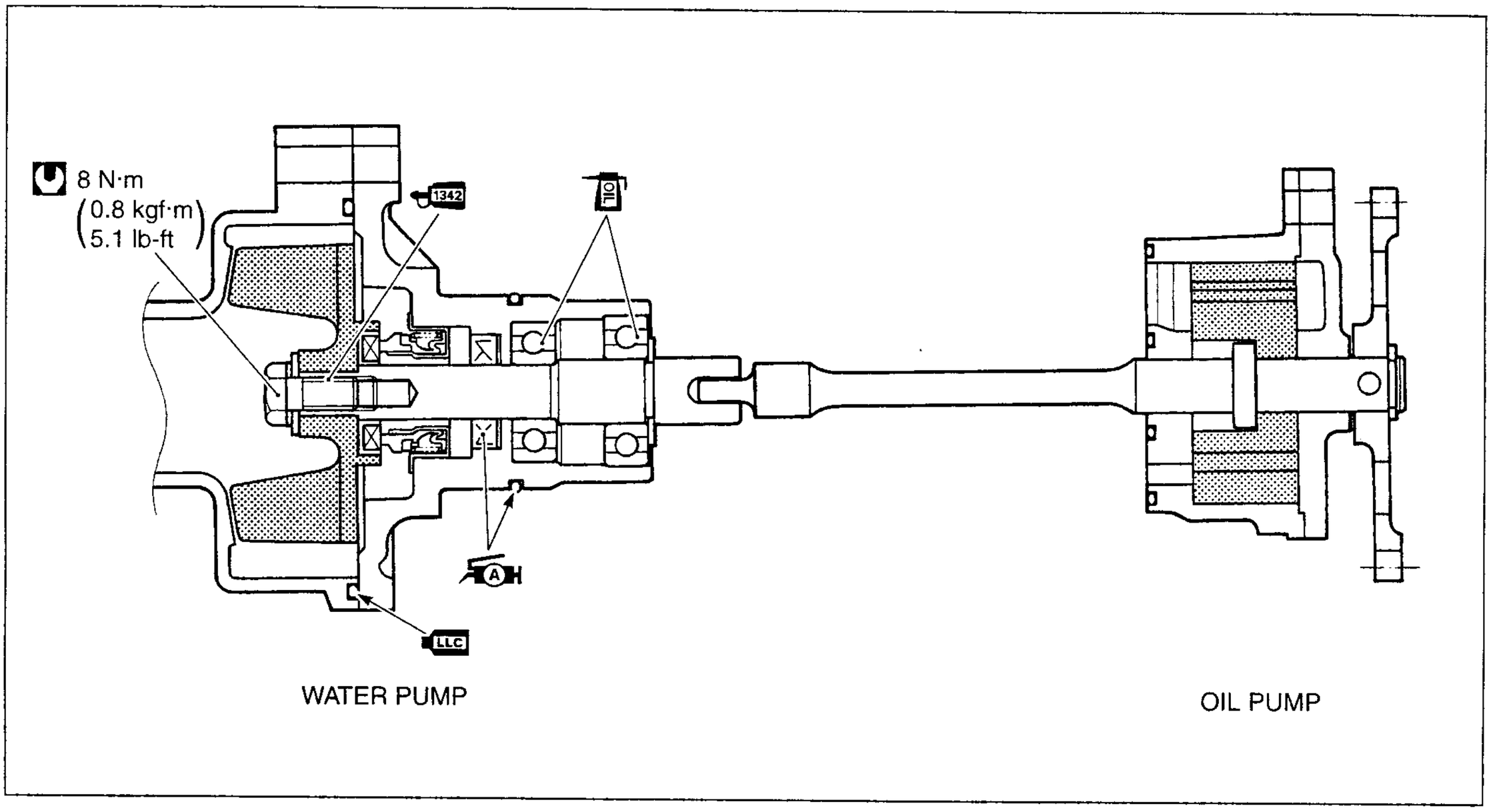

LUBRICATION SYSTEM

OIL PRESSURE

☞2-30

OIL FILTER

☞2-13

OIL PRESSURE REGULATOR

☞3-46

OIL STRAINER

☞3-46

OIL JET

☞3-58

OIL PUMP

☞3-44

OIL PRESSURE SWITCH

☞7-28

OIL COOLER

REMOVAL

- Remove the under cowling. (☞6-3)
- Drain engine oil. (☞2-12)
- Remove the oil cooler. (☞3-4)

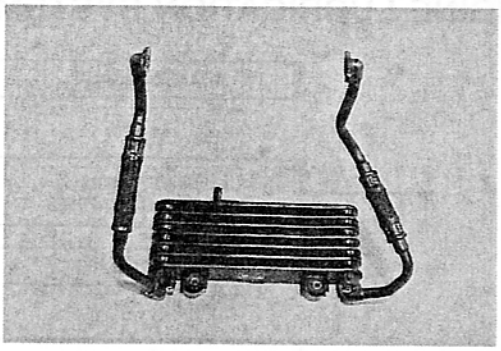

INSPECTION AND CLEANING

- Road dirt or trash stuck to the fins must be removed.
- Use of compressed air is recommended for this cleaning.

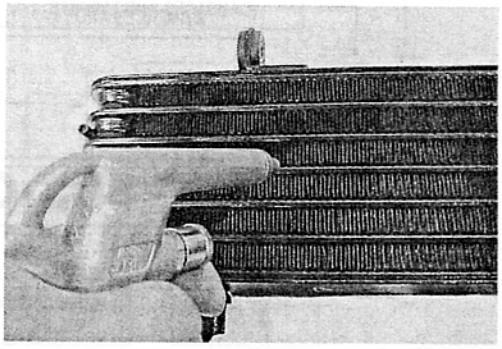

- Fins bent down or dented can be repaired by straightening them with the blade of a small screwdriver.

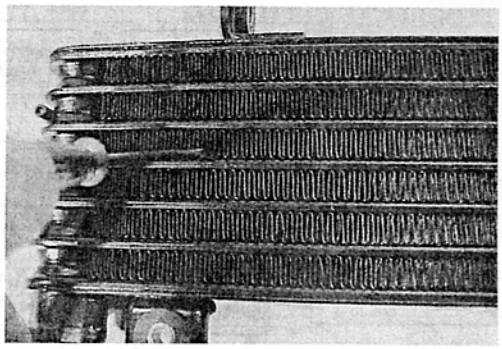

INSTALLATION

- Install a new O-ring ①.

⚠ CAUTION

Use the new O-rings to prevent engine oil leakage.

NOTE:
Apply engine oil to the O-ring ①.

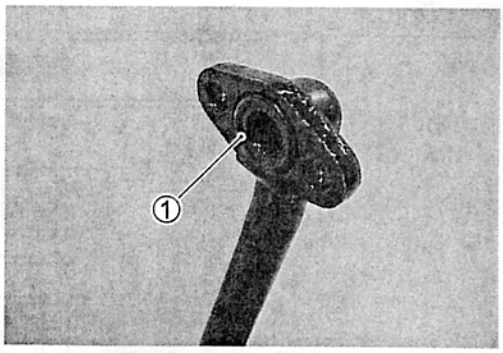

- Tighten the oil cooler hose bolts to the specified torque.

Oil cooler hose bolt: 10 N·m (1.0 kgf·m, 7.0 lb-ft)

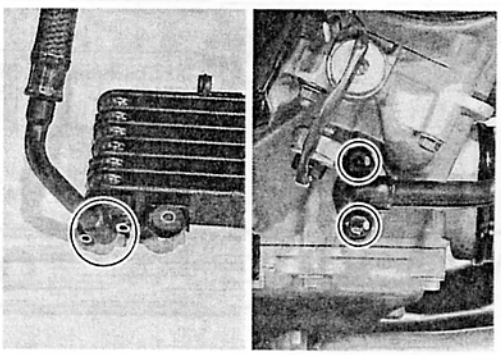

ENGINE LUBRICATION SYSTEM CHART

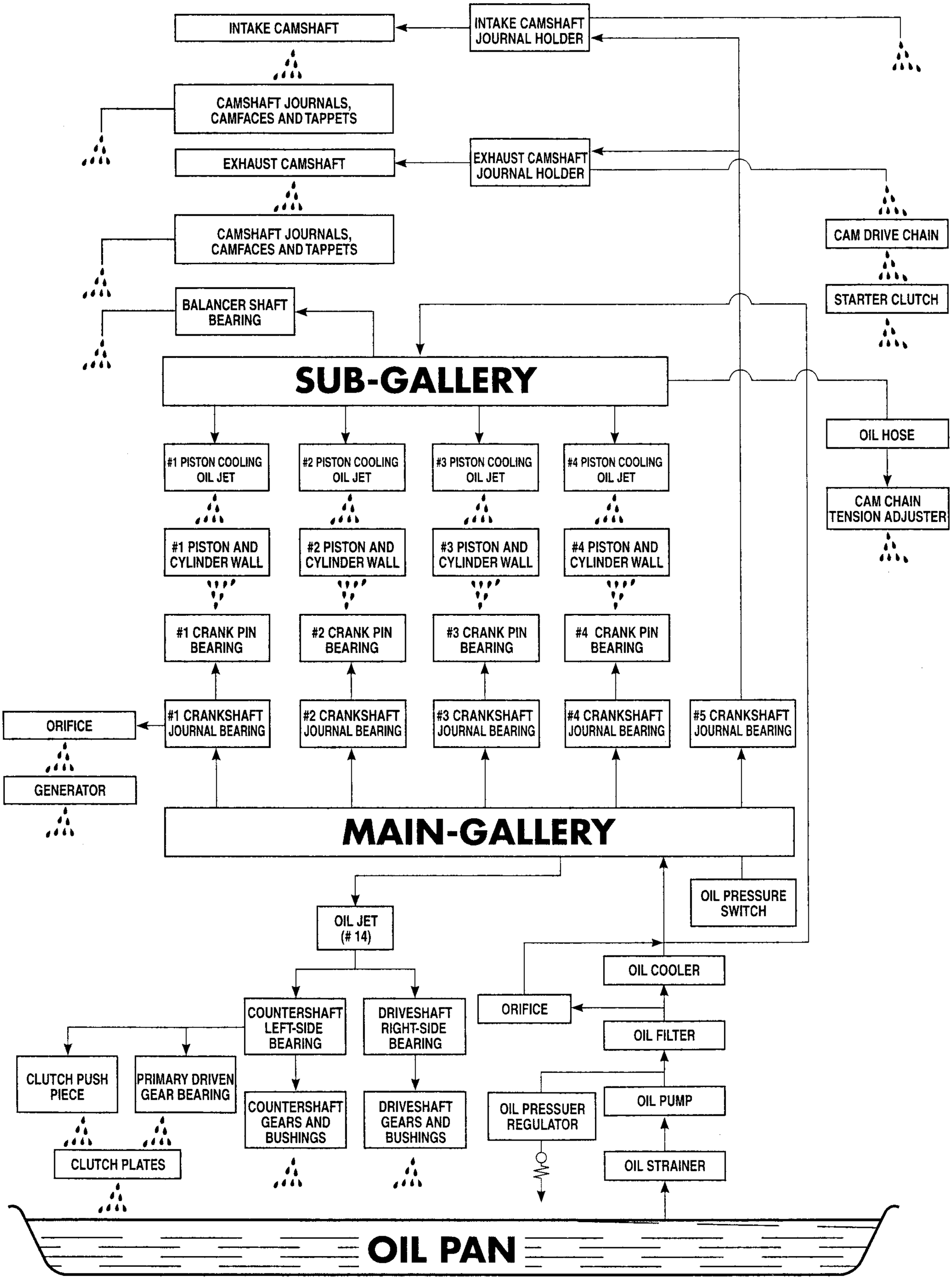

ENGINE LUBRICATION SYSTEM

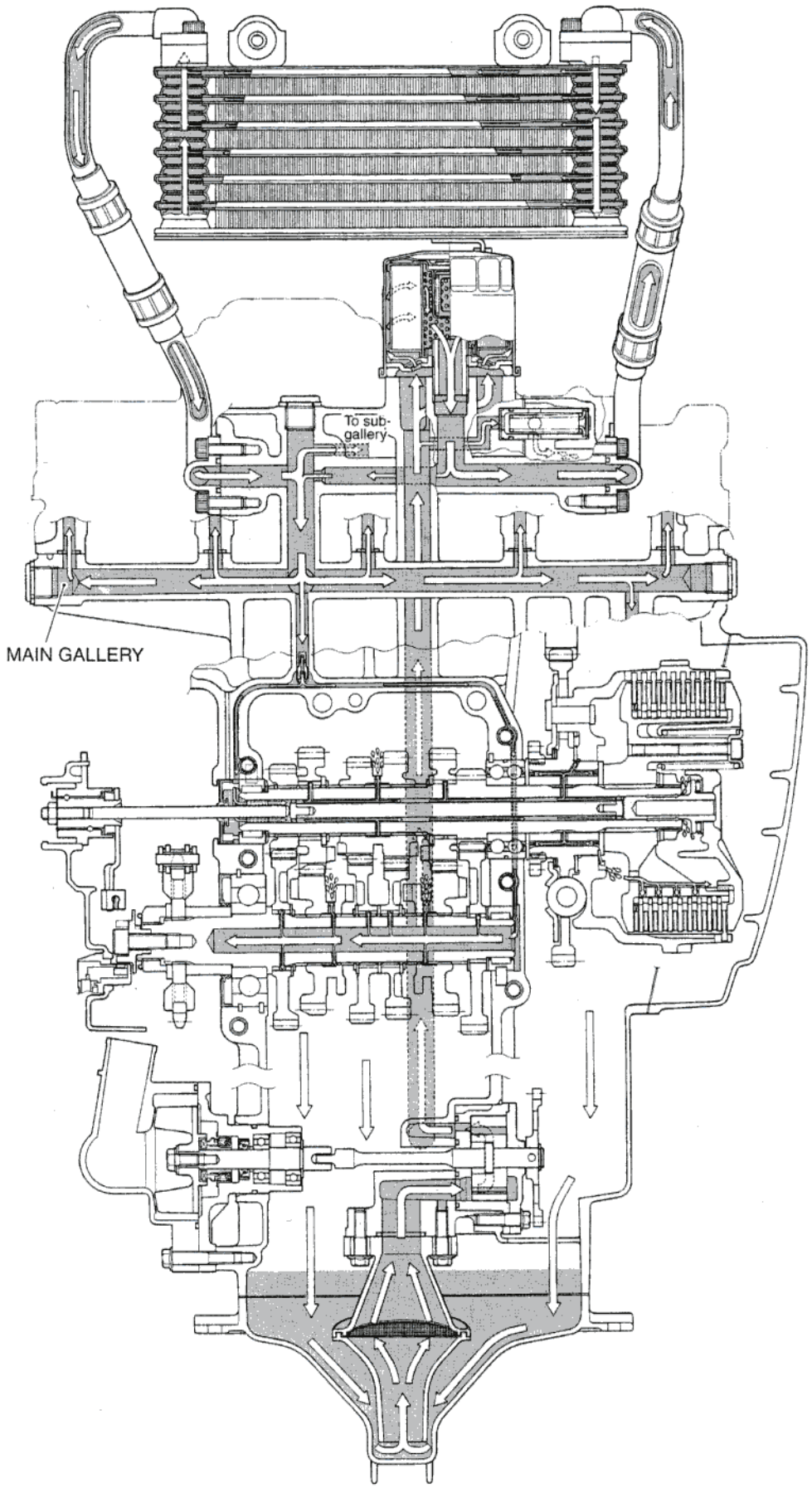

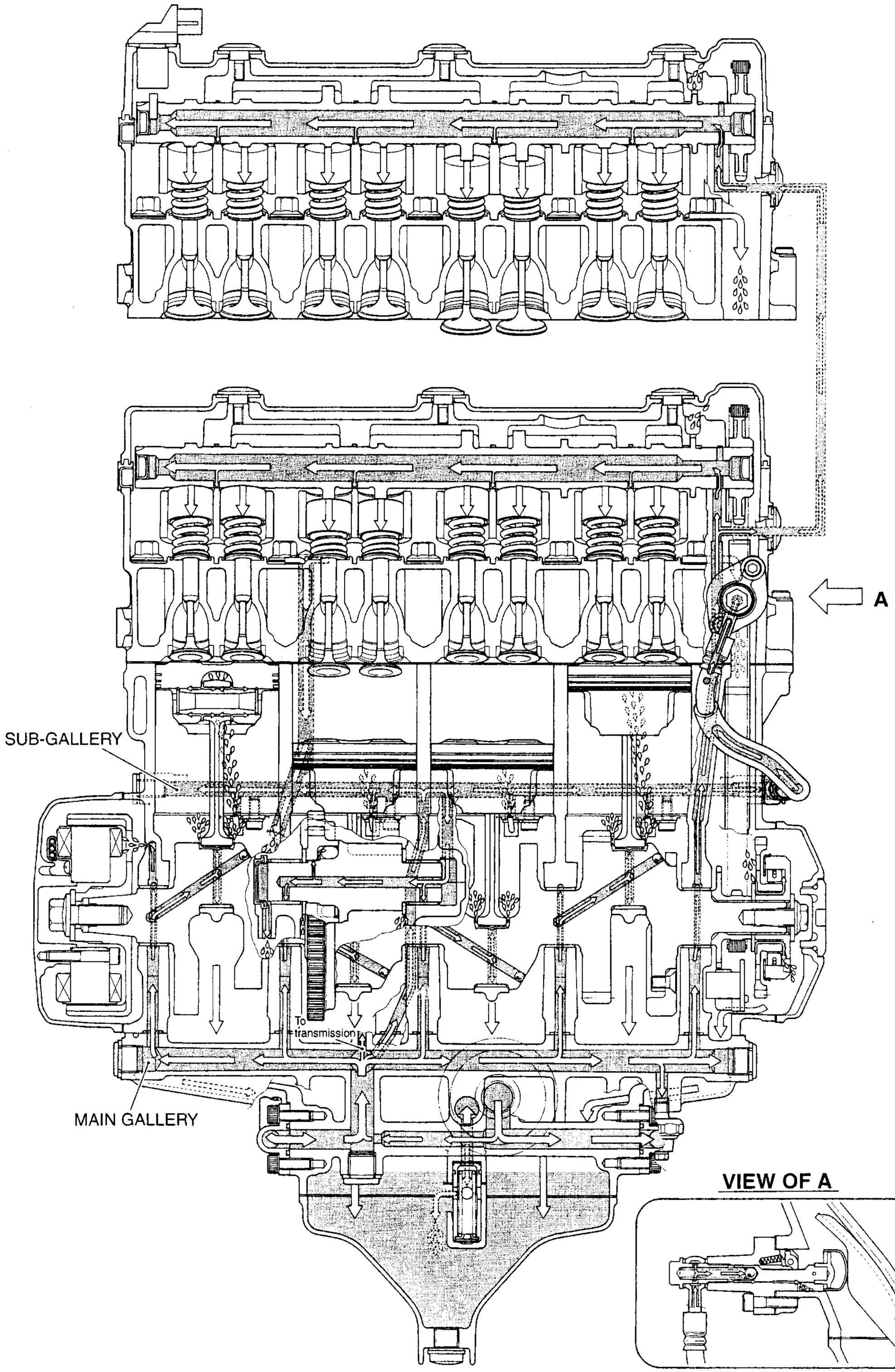

VIEW OF A

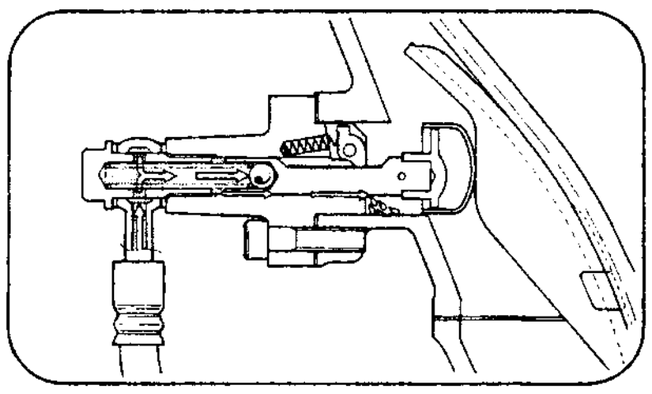

CHASSIS

CONTENTS

EXTERIOR PARTS 6- 2
FASTENER REMOVAL AND REINSTALLATION 6- 2
SCREEN 6- 2
BODY COWLING COVER AND LOWER BRACKET COVER 6- 3
RIGHT AND LEFT UNDER COWLINGS 6- 3
BODY COWLING 6- 4
RIGHT AND LEFT AIR INTAKE PIPES 6- 5
COWLING BRACE 6- 5
FRONT SEAT 6- 6
REAR SEAT AND SEAT TAIL COVER 6- 6
FRAME COVER 6- 6
FRONT WHEEL 6- 7
CONSTRUCTION 6- 7
REMOVAL 6- 8
INSPECTION AND DISASSEMBLY 6- 8
REASSEMBLY AND REMOUNTING 6-10
FRONT FORK 6-13
CONSTRUCTION 6-13
REMOVAL AND DISASSEMBLY 6-14
INSPECTION 6-16
REASSEMBLY AND REMOUNTING 6-17
SUSPENSION SETTING 6-22
STEERING DAMPER 6-23
CONSTRUCTION 6-23
REMOVAL 6-23
INSPECTION 6-23
REMOUNTING 6-23
STEERING 6-24
CONSTRUCTION 6-24
REMOVAL AND DISASSEMBLY 6-24
INSPECTION AND DISASSEMBLY 6-26
REASSEMBLY AND REMOUNTING 6-26
STEERING TENSION ADJUSTMENT 6-28
HANDLEBAR 6-29
CONSTRUCTION 6-29
REMOVAL AND DISASSEMBLY 6-29
REASSEMBLY AND REMOUNTING 6-30
REAR WHEEL 6-32
CONSTRUCTION 6-32
REMOVAL 6-33
INSPECTION AND DISASSEMBLY 6-34
REASSEMBLY AND REMOUNTING 6-36
REAR SHOCK ABSORBER 6-40
CONSTRUCTION 6-40
REMOVAL 6-41
INSPECTION 6-41
REAR SHOCK ABSORBER DISPOSAL 6-42
REMOUNTING 6-42
SUSPENSION SETTING 6-43

REAR SUSPENSION 6-44
CONSTRUCTION 6-44
REMOVAL 6-45
INSPECTION AND DISASSEMBLY 6-47
REASSEMBLY 6-49
REMOUNTING 6-51
FINAL INSPECTION AND ADJUSTMENT 6-52
FRONT BRAKE 6-53
CONSTRUCTION 6-53
BRAKE PAD REPLACEMENT 6-54
BRAKE FLUID REPLACEMENT 6-54
CALIPER REMOVAL AND DISASSEMBLY 6-55
CALIPER INSPECTION 6-56
CALIPER REASSEMBLY AND REMOUNTING 6-56
BRAKE DISC INSPECTION 6-57
MASTER CYLINDER REMOVAL AND DISASSEMBLY 6-58
MASTER CYLINDER INSPECTION 6-59
MASTER CYLINDER REASSEMBLY AND REMOUNTING 6-59
REAR BRAKE 6-61
CONSTRUCTION 6-61
BRAKE PAD REPLACEMENT 6-62
BRAKE FLUID REPLACEMENT 6-62
CALIPER REMOVAL AND DISASSEMBLY 6-63
CALIPER INSPECTION 6-64
CALIPER REASSEMBLY AND REMOUNTING 6-64
MASTER CYLINDER REMOVAL AND DISASSEMBLY 6-65
MASTER CYLINDER INSPECTION 6-66
MASTER CYLINDER REASSEMBLY AND REMOUNTING 6-66
TIRE AND WHEEL 6-67
TIRE REMOVAL 6-67
INSPECTION 6-67
VALVE INSPECTION 6-68
VALVE INSTALLATION 6-68
TIRE INSTALLATION 6-68
BALANCER WEIGHT 6-69
DRIVE CHAIN 6-70
DRIVE CHAIN CUTTING 6-70
DRIVE CHAIN CONNECTING 6-71

EXTERIOR PARTS

FASTENER REMOVAL AND REINSTALLATION

FASTENER ⓐ

REMOVAL

- Depress the head of fasteners center piece ①.
- Pull out the fastener.

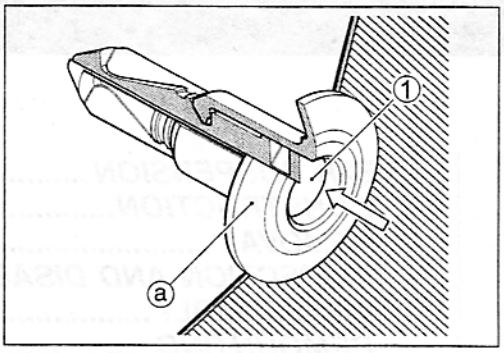

INSTALLATION

- Let the center piece stick out toward the head so that the pawls ② close.
- Insert the fastener into the installation hole.

NOTE:

To prevent the pawl ② from damage, insert the fastener all the way into the installation hole.

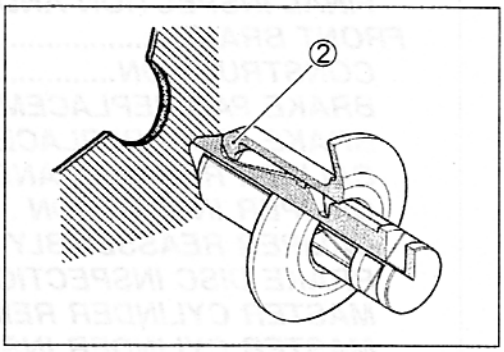

- Push in the head of center piece until it becomes flush with the fastener outside face.

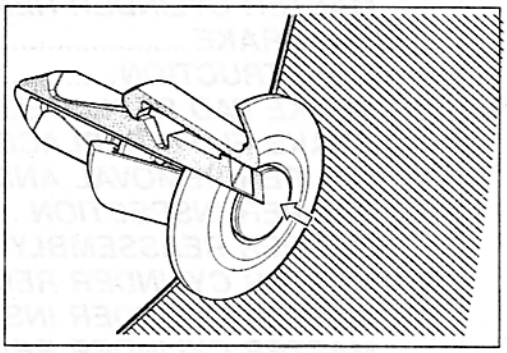

FASTENER ⓑ

REMOVAL

- Pull the head of fastener center piece
- Pull out the fastener.

INSTALLATION

- Let the center piece stick out toward the head so that the pawls close.
- Insert the fastener into the installation hole.
- Push in the head of center piece.

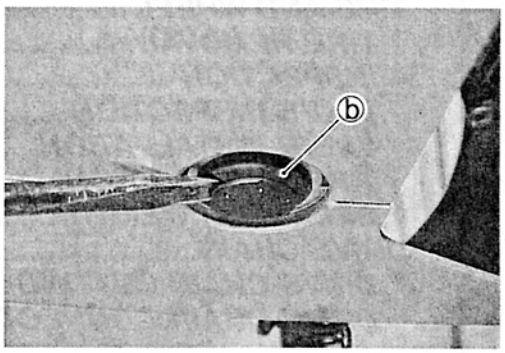

SCREEN

- Remove the bolts and nuts.
- Remove the screen.

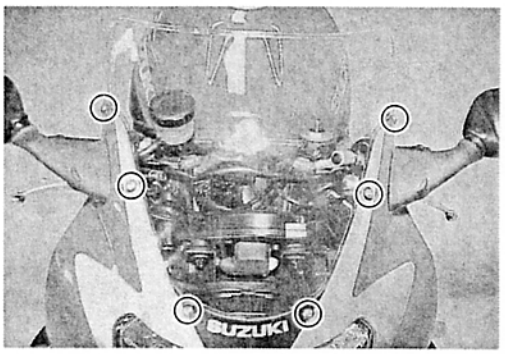

BODY COWLING COVER AND LOWER BRACKET COVER

- Remove the body cowling cover ① by removing the fasteners.
- Remove the lower bracket cover ② by removing the bolts.

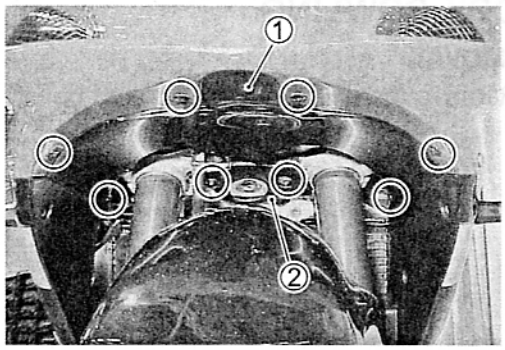

RIGHT AND LEFT UNDER COWLINGS

- Remove the fastener.

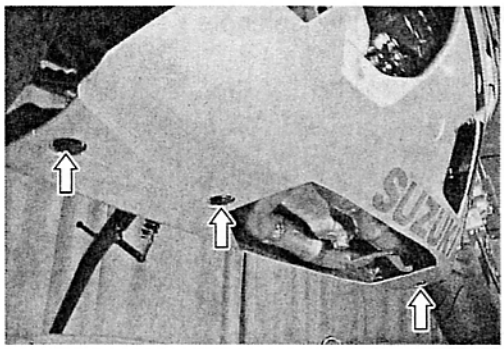

- Remove the fastener.

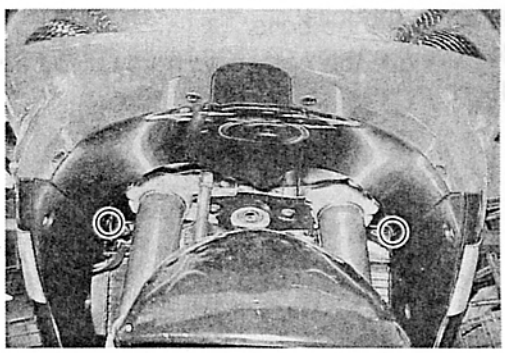

- Remove the right under cowling.
- Disconnect the turn signal light lead wire coupler.

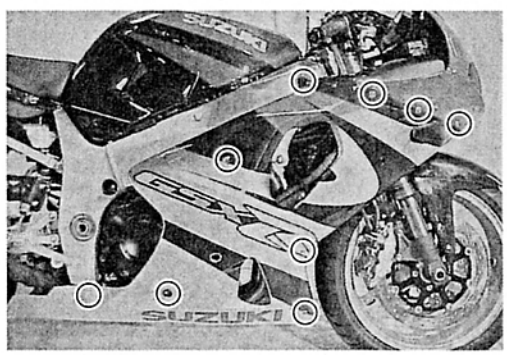

- Remove the left under cowling.
- Disconnect the turn signal light lead wire coupler.

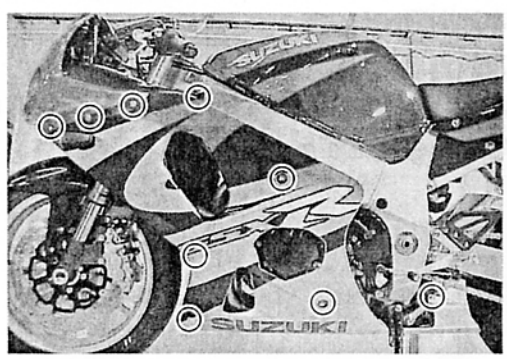

BODY COWLING

REMOVAL

- Remove the rear view mirrors and bolts.

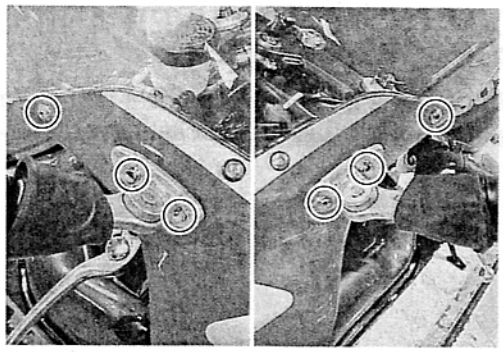

- Remove the fasteners.

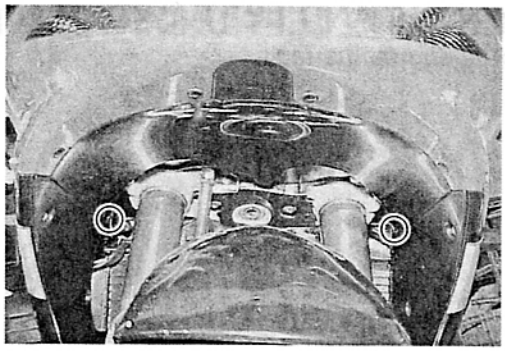

- Remove the bolts.
- Remove the body cowling by disconnecting the lead wire couplers.

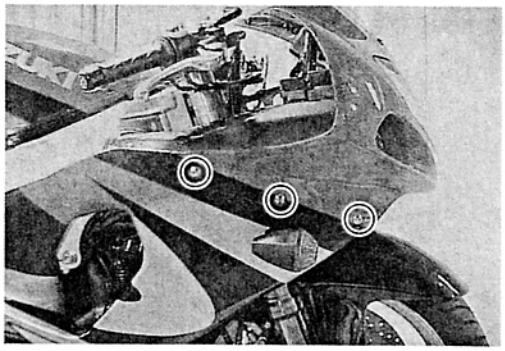

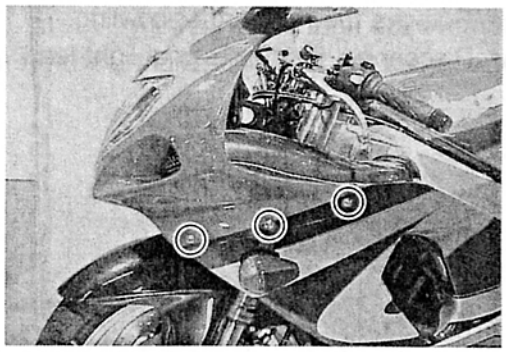

REMOUNTING

NOTE:
When remounting the body cowling, install the hooks Ⓐ to the cowling brace holes.

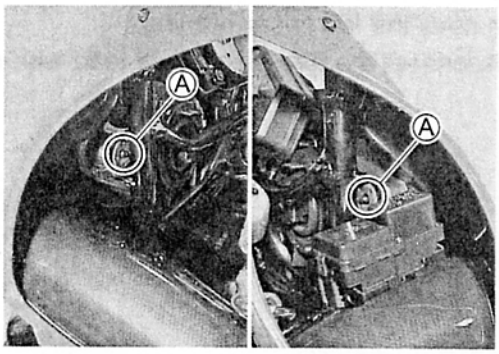

RIGHT AND LEFT AIR INTAKE PIPES

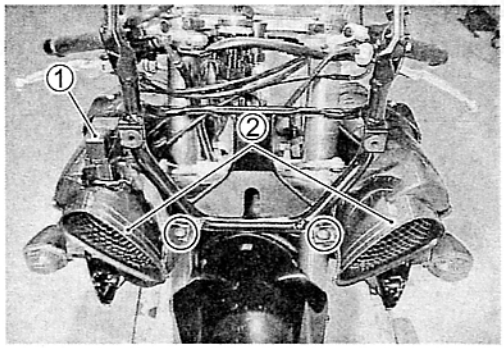

- Remove the body cowling. (☞6-4)
- Remove the bolt and fastener.
- Remove the fuse box and turn signal/side stand relay ①.
- Disconnect the lead wire couplers under the right intake pipe.
- Remove the air intake pipe ②.

COWLING BRACE

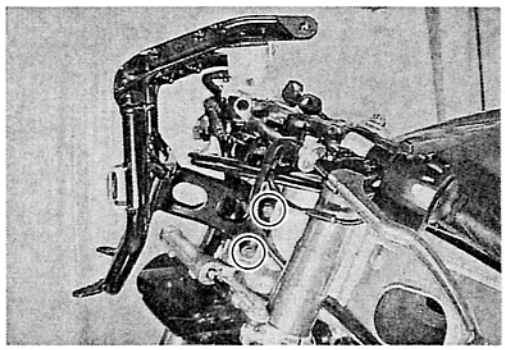

REMOVAL

- Remove the body cowling. (☞6-4)
- Remove the intake pipe.
- Remove the cowling brace.

REMOUNTING

- Tighten the cowling brace bolts and nut.

Cowling brace bolt and nut : 25 N·m (2.5 kgf·m, 18.0 lb-ft)

FRONT SEAT

- Remove the front seat by removing the bolts.

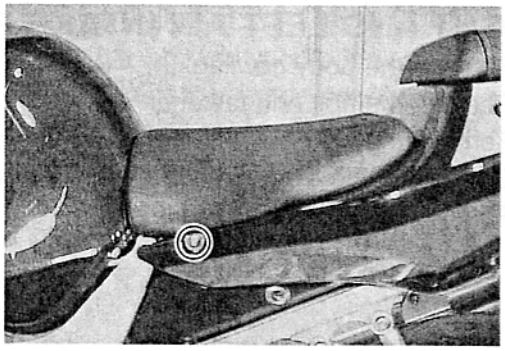

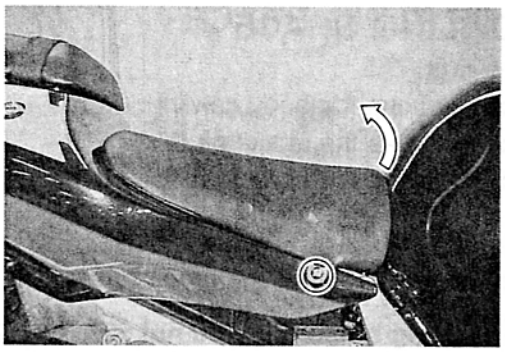

REAR SEAT AND SEAT TAIL COVER

- Remove the rear seat (seat tail cover) with the ignition key.

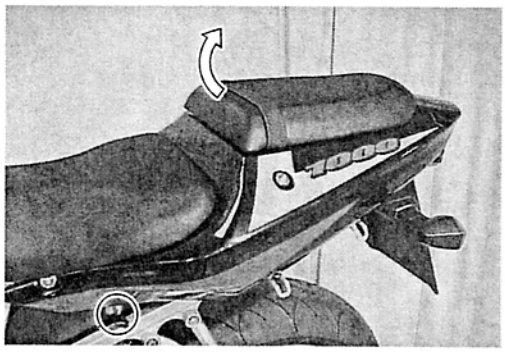

FRAME COVER

- Remove the seats.
- Remove the bolts.

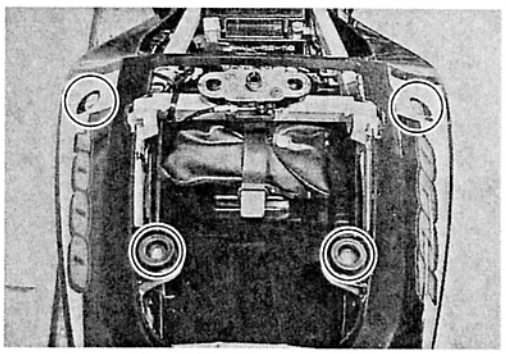

- Remove the fasteners.
- Disconnect the rear combination light lead wire coupler.
- Remove the frame cover.

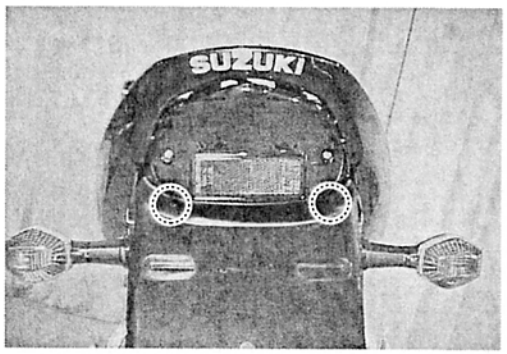

FRONT WHEEL

CONSTRUCTION

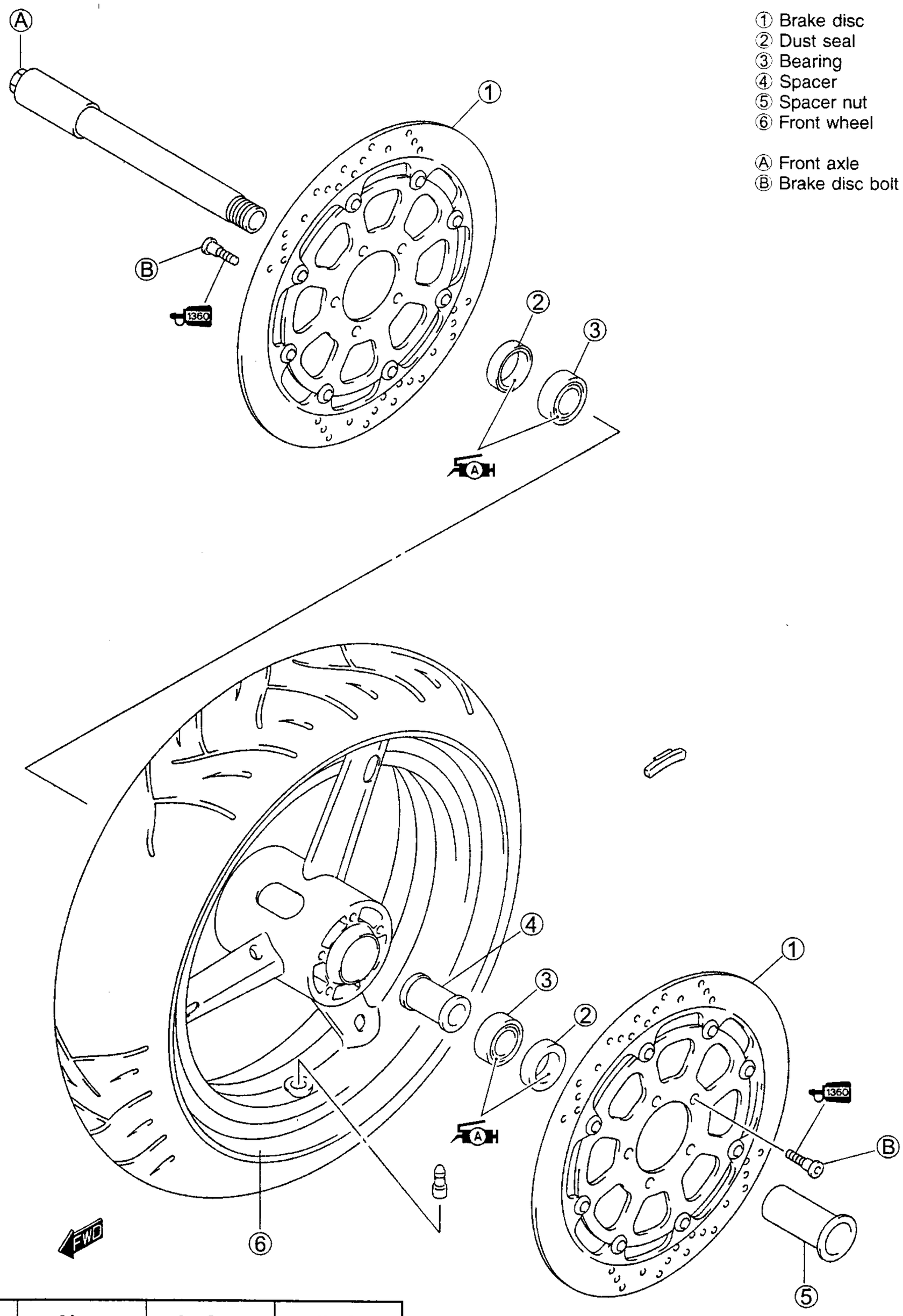

① Brake disc
② Dust seal
③ Bearing
④ Spacer
⑤ Spacer nut
⑥ Front wheel

Ⓐ Front axle
Ⓑ Brake disc bolt (Front)

ITEM	N·m	kgf·m	lb-ft
Ⓐ	100	10.0	72.5
Ⓑ	23	2.3	16.5

REMOVAL

- Remove the brake calipers.

⚠ CAUTION

Do not operate the brake lever while removing the calipers.

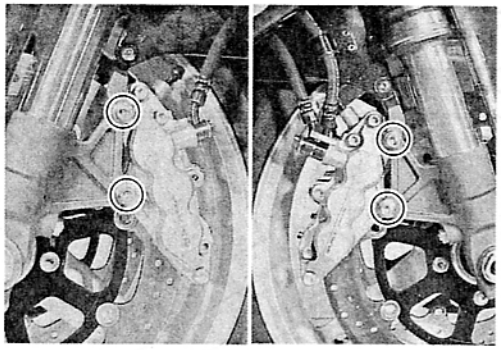

- Loosen two axle pinch bolts ① on the right front fork leg.
- Slightly loosen the front axle ②.

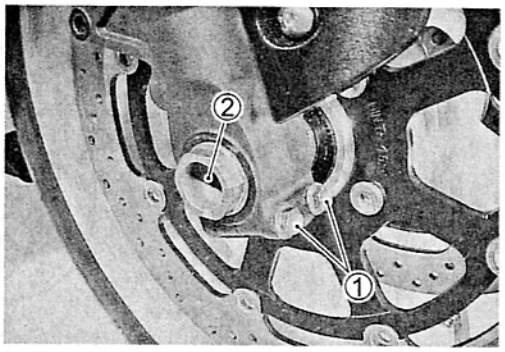

- Raise the front wheel off the ground and support the motorcycle with a jack or a wooden block.

⚠ CAUTION

Do not work by using side stand. Do not support the motorcycle with exhaust pipe. Make sure that the motorcycle is supported securely.

- Draw out the front axle and remove the front wheel.

- Loosen two axle pinch bolts ③ on the left front fork leg and remove the spacer nut ④.

NOTE:
After removing the front wheel, fit the calipers temporarily to the original positions.

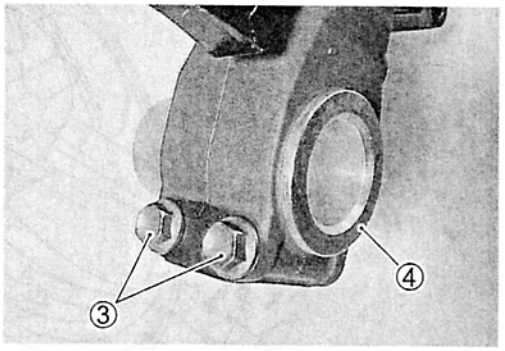

INSPECTION AND DISASSEMBLY

TIRE INSPECTION (☞6-67)

- Remove the brake disc.

BRAKE DISC INSPECTION (☞6-57)

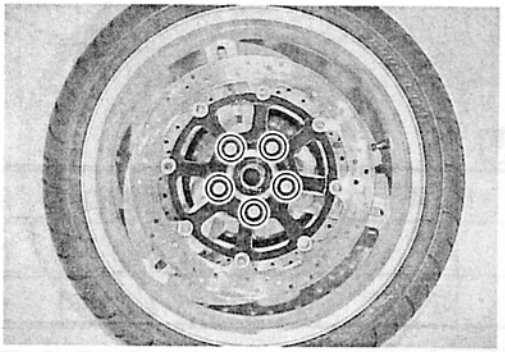

—— Continued on next page ——

• Remove both side dust seals by using the special tool.

TOOL **09913-50121: Oil seal remover**

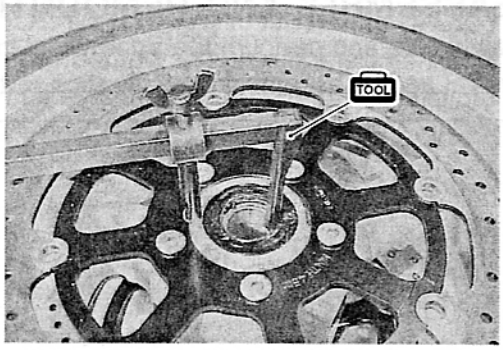

⚠ CAUTION

The removed dust seals must be replaced with new ones.

AXLE SHAFT

Using a dial gauge, check the axle shaft for runout and replace it if the runout exceeds the limit.

TOOL **09900-20607: Dial gauge (1/100)**
09900-20701: Magnetic stand
09900-21304: V-block set (100 mm)

DATA **Axle shaft runout**
Service Limit: 0.25 mm (0.010 in)

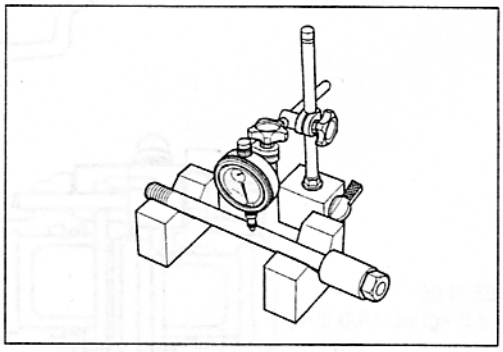

WHEEL

Make sure that the wheel runout checked as shown does not exceed the service limit. An excessive runout is usually due to worn or loosened wheel bearings and can be reduced by replacing the bearings. If bearing replacement fails to reduce the runout, replace the wheel.

DATA **Wheel runout**
Service Limit (Axial and Radial): 2.0 mm (0.08 in)

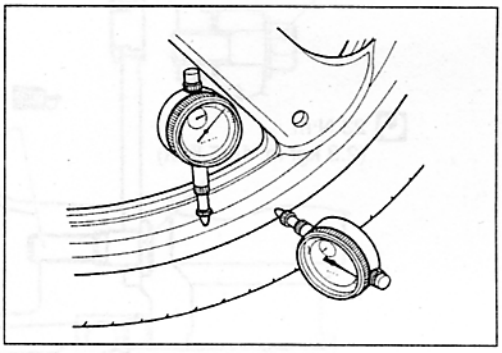

WHEEL BEARINGS

Inspect the play of the wheel bearings by finger while they are in the wheel. Rotate the inner race by finger to inspect for abnormal noise and smooth rotation.
Replace the bearing in the following procedure if there is anything unusual.

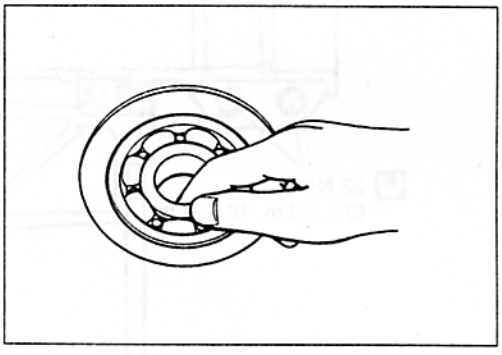

• Remove the wheel bearings by using the special tool.

TOOL **09921-20240: Bearing remover set**

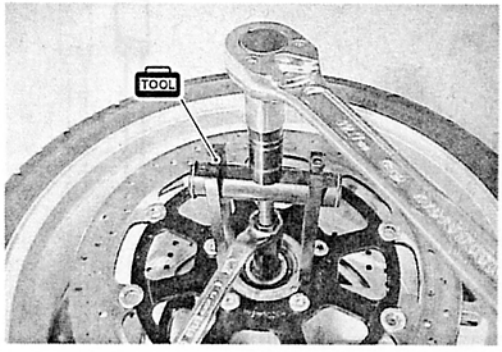

⚠ CAUTION

The removed bearings should be replaced with new ones.

REASSEMBLY AND REMOUNTING

Reassemble and remount the front wheel in the reverse order of removal and disassembly. Pay attention to the following points:

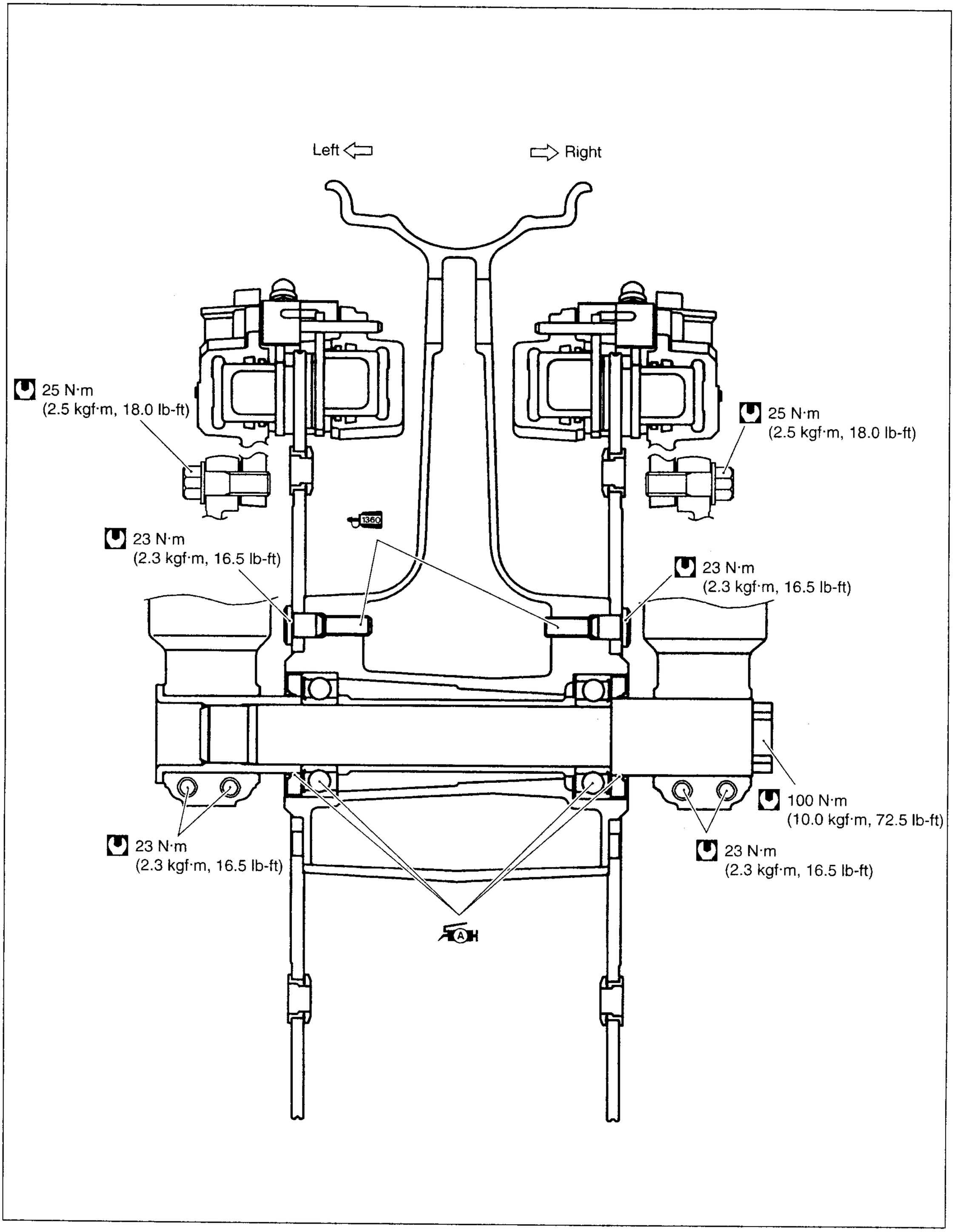

WHEEL BEARING

- Apply grease to the wheel bearings.

99000-25030: SUZUKI SUPER GREASE "A" (For USA)
99000-25010: SUZUKI SUPER GREASE "A" (For the other countries)

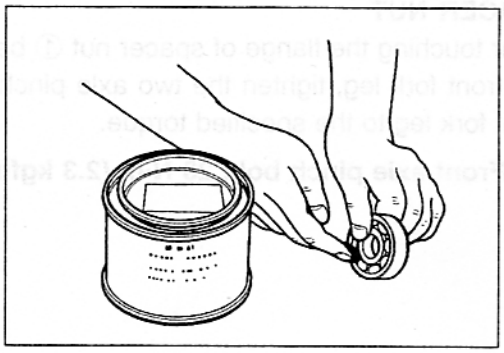

- Install the wheel bearings as follows by using the special tools.

09941-34513: Bearing/Steering race installer set

⚠ CAUTION

First install the left wheel bearing, then install the right wheel bearing.
The sealed cover of the bearing must face outside.

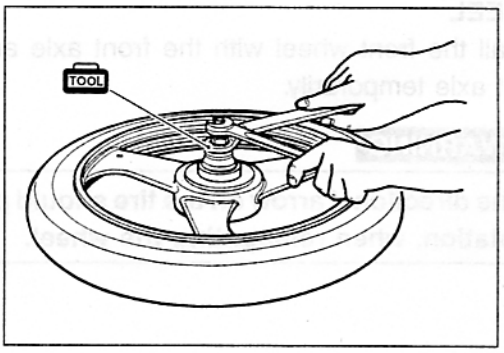

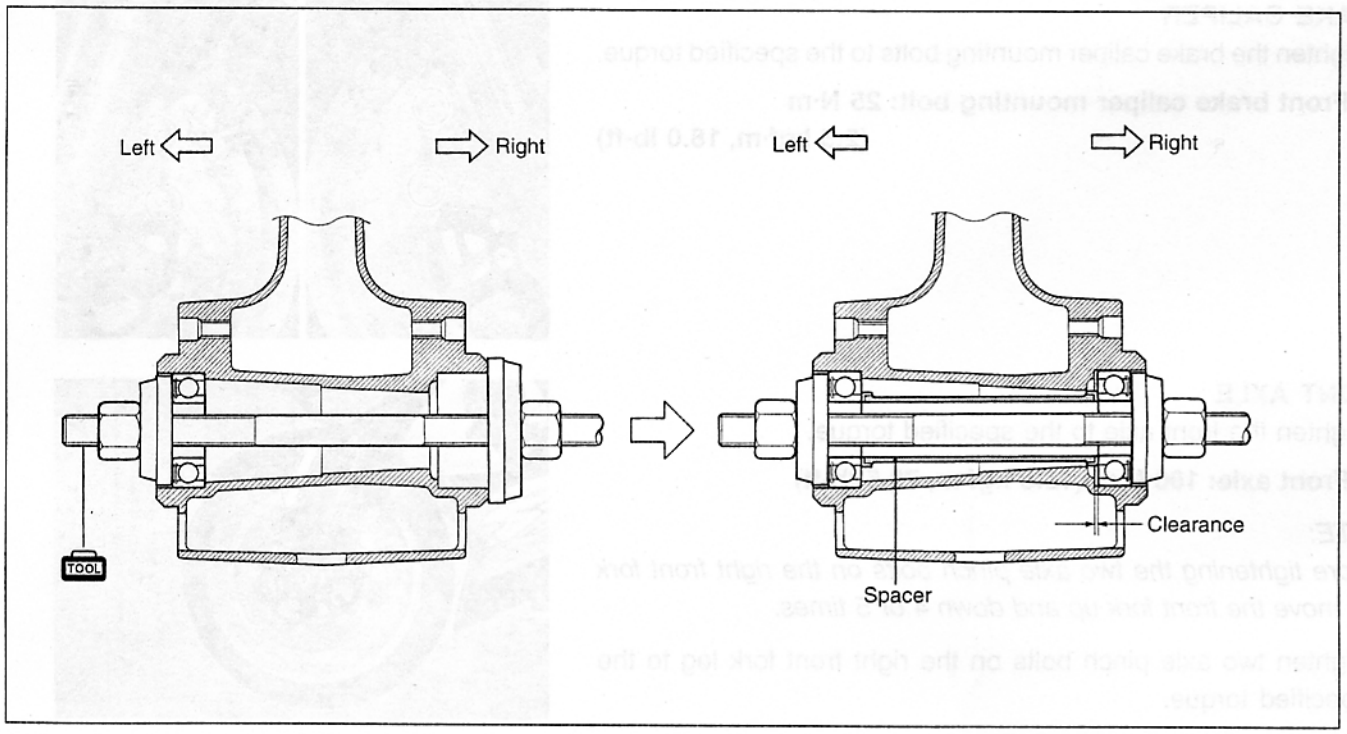

BRAKE DISC

Make sure that the brake disc is clean and free of any greasy matter.

- Apply THREAD LOCK SUPER "1360" to the disc mounting bolts and tighten them to the specified torque.

Brake disc bolt (Front): 23 N·m (2.3 kgf·m, 16.5 lb-ft)

99000-32130: THREAD LOCK SUPER "1360"

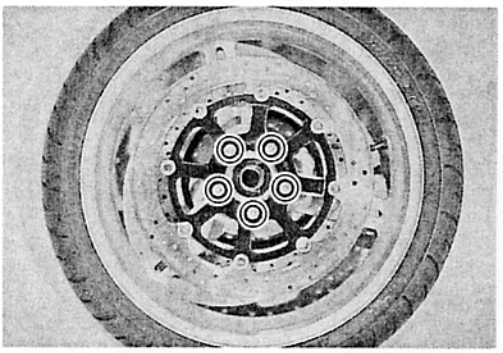

SPACER NUT

After touching the flange of spacer nut ① being contact with the left front fork leg, tighten the two axle pinch bolts ② on the left front fork leg to the specified torque.

Front axle pinch bolt: 23 N·m (2.3 kgf·m, 16.5 lb-ft)

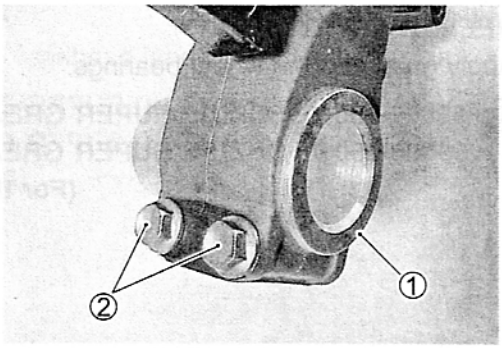

WHEEL

Install the front wheel with the front axle and hand-tighten the front axle temporarily.

⚠ WARNING

The directional arrow on the tire should point to the wheel rotation, when remounting the wheel.

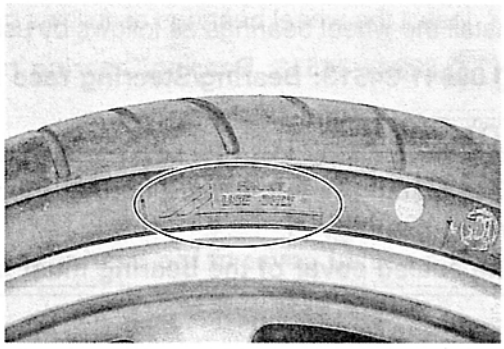

BRAKE CALIPER

- Tighten the brake caliper mounting bolts to the specified torque.

Front brake caliper mounting bolt: 25 N·m (2.5 kgf·m, 18.0 lb-ft)

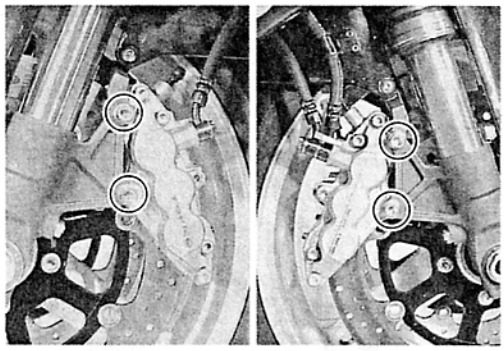

FRONT AXLE

- Tighten the front axle to the specified torque.

Front axle: 100 N·m (10.0 kgf·m, 72.5 lb-ft)

NOTE:

Before tightening the two axle pinch bolts on the right front fork leg, move the front fork up and down 4 or 5 times.

- Tighten two axle pinch bolts on the right front fork leg to the specified torque.

Front axle pinch bolt: 23 N·m (2.3 kgf·m, 16.5 lb-ft)

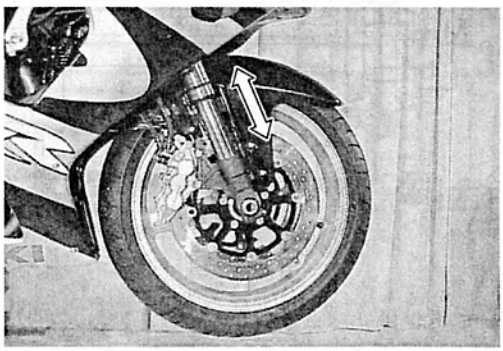

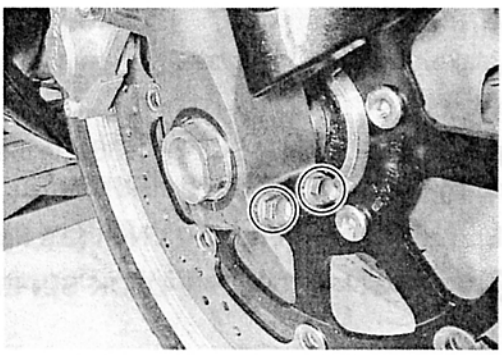

FRONT FORK

CONSTRUCTION

① O-ring
② Spacer
③ Spring retainer
④ Spring
⑤ Adjuster rod
⑥ Inner rod/damper rod (cartridge)
⑦ Outer tube
⑧ Oil seal retainer
⑨ Oil seal
⑩ Oil seal stopper ring
⑪ Dust seal
⑫ Inner tube

Ⓐ Front fork cap bolt
Ⓑ Lock nut
Ⓒ Front axle pinch bolt
Ⓓ Damper rod bolt

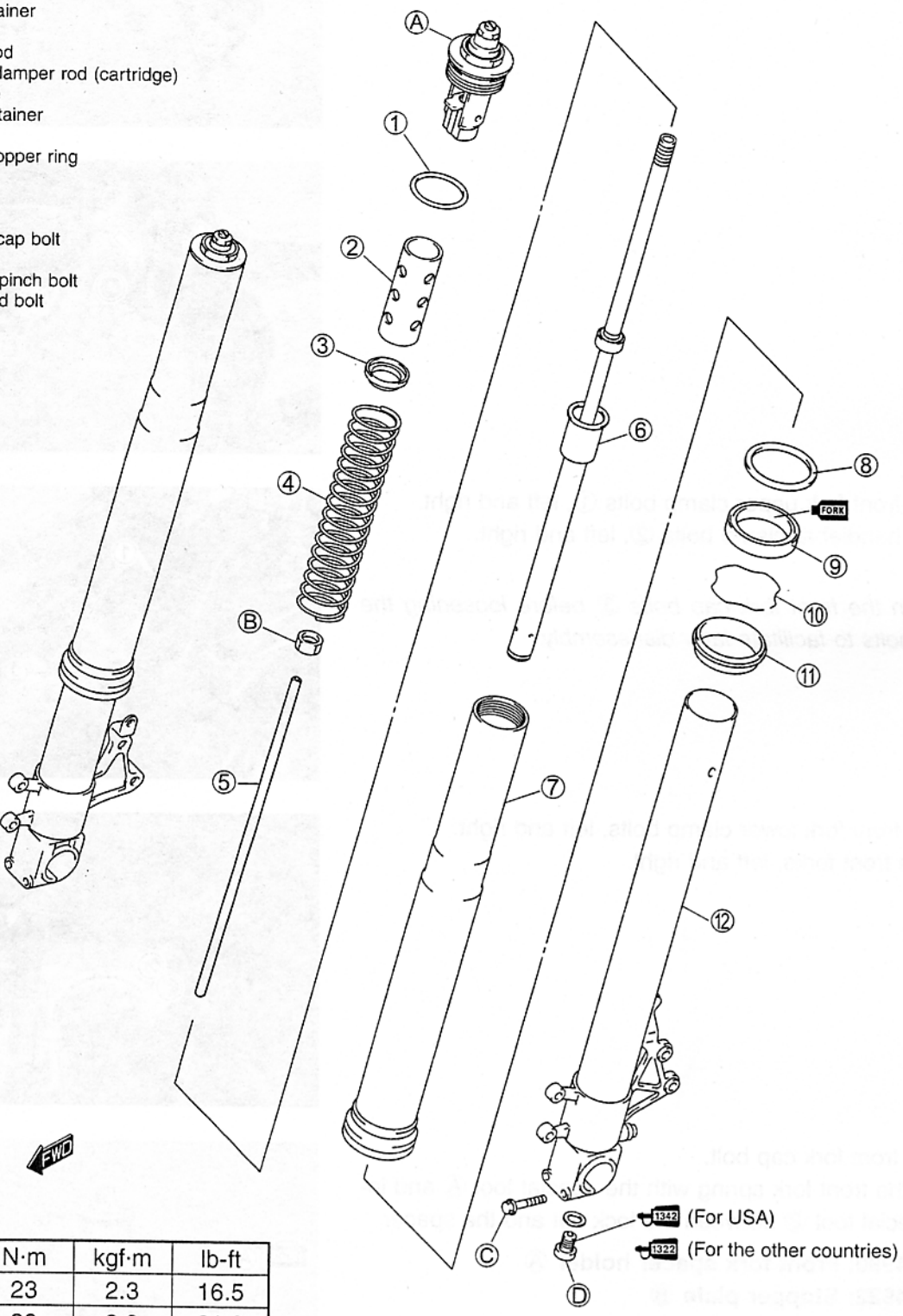

ITEM	N·m	kgf·m	lb-ft
Ⓐ	23	2.3	16.5
Ⓑ	29	2.9	21.0
Ⓒ	23	2.3	16.5
Ⓓ	40	4.0	29.0

REMOVAL AND DISASSEMBLY

- Remove the front wheel. (☞6-8)
- Disconnect the brake hose from the brake hose guides on the front fender.
- Remove the front fender.

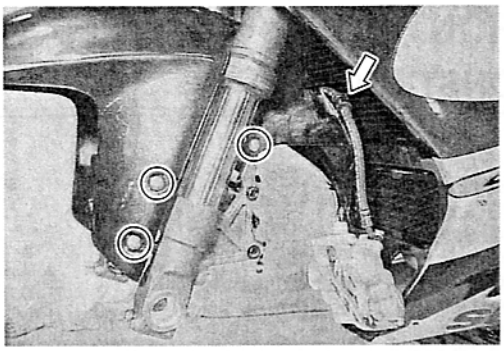

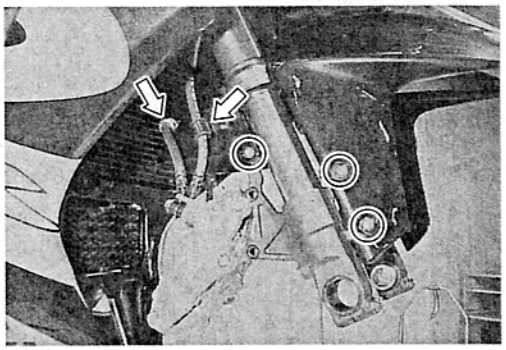

- Loosen the front fork upper clamp bolts ①, left and right.
- Loosen the handlebar clamp bolts ②, left and right.

NOTE:
Slightly loosen the front fork cap bolts ③ before loosening the lower clamp bolts to facilitate later disassembly.

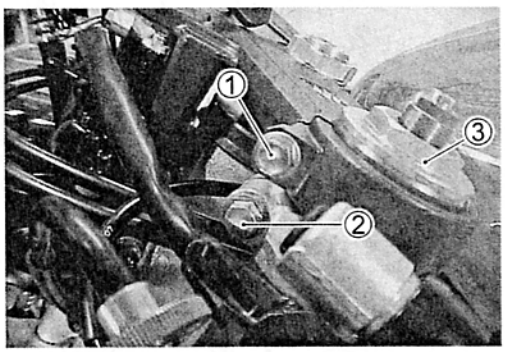

- Loosen the front fork lower clamp bolts, left and right.
- Remove the front forks, left and right.

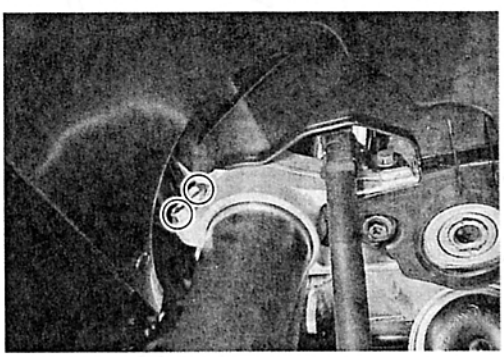

- Loosen the front fork cap bolt.
- Compress the front fork spring with the special tool Ⓐ and insert the special tool Ⓑ between the lock nut and the spacer.

TOOL **09940-94930: Front fork spacer holder Ⓐ**
09940-94922: Stopper plate Ⓑ

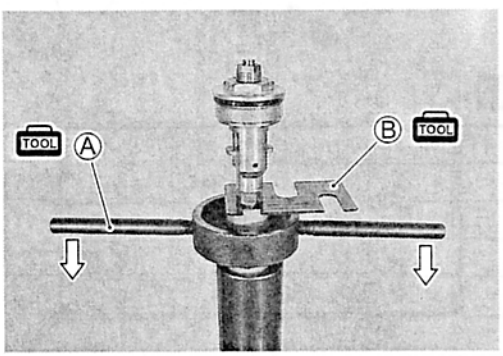

- Remove the front fork cap bolt from the inner rod by loosening the lock nut ①.
- Compress the fork spring with the special tool Ⓐ and remove the special tool Ⓑ.

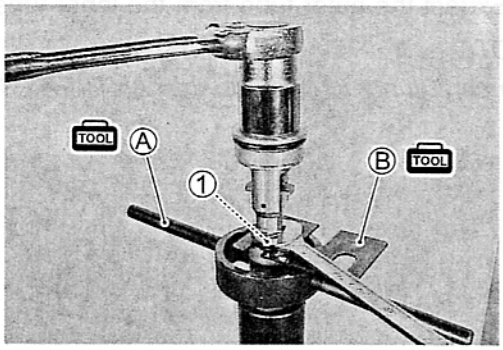

- Remove the spacer ②, spring retainer ③, spring ④, and adjuster rod ⑤.

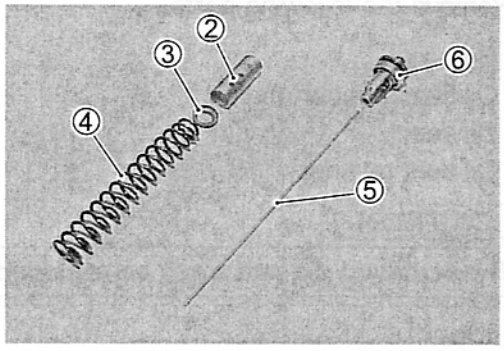

⚠ CAUTION

Do not disassemble the front fork cap ⑥.

- Invert the front fork and stroke the inner rod several times to let out fork oil.
- Under the inverted condition of front fork, drain oil to hold it for a few time.

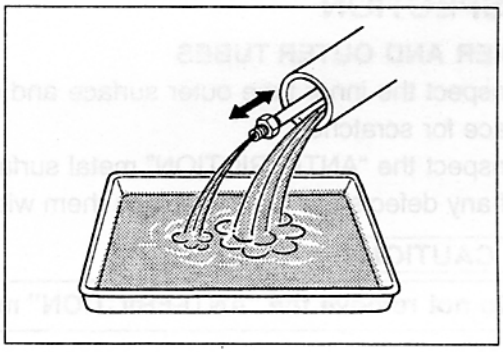

- Remove the damper rod bolt with the special tool and a hexagon wrench.

TOOL 09940-30221: Front fork assembling tool

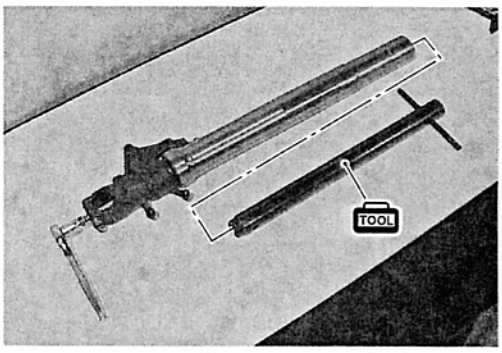

- Remove the inner rod/damper rod (cartridge) ⑦.

⚠ CAUTION

Do not disassemble the inner rod/damper rod (cartridge).

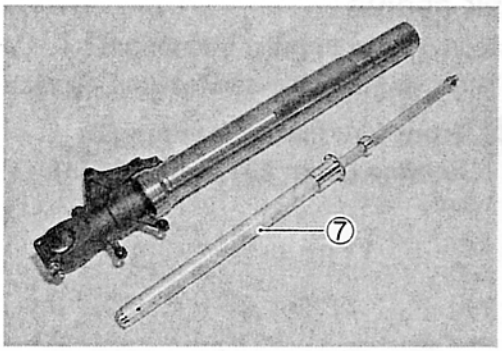

• Extract the outer tube from the inner tube.

NOTE:
Be careful not to damage the "ANTI-FRICTION" metals.

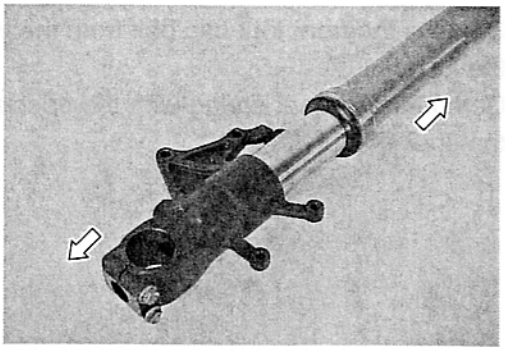

• Remove the following parts.

① Dust seal
② Oil seal stopper ring
③ Oil seal
④ Oil seal retainer

⚠ CAUTION

The removed oil seal must be replaced with a new one.

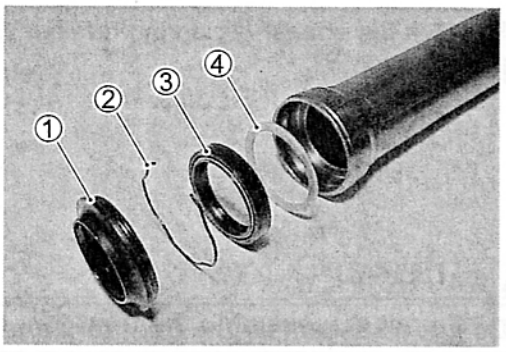

INSPECTION

INNER AND OUTER TUBES

- Inspect the inner tube outer surface and outer tube inner surface for scratches.
- Inspect the "ANTI-FRICTION" metal surfaces for scratches.
- If any defects are found, replace them with a new one.

⚠ CAUTION

Do not remove the "ANTI-FRICTION" metal Ⓐ and Ⓑ.

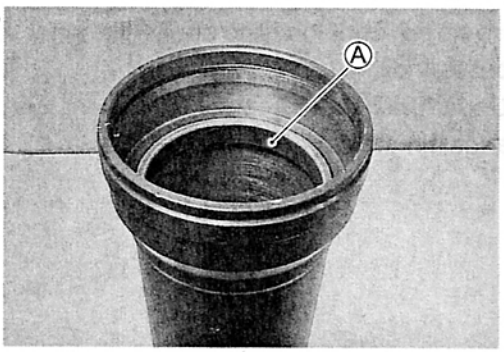

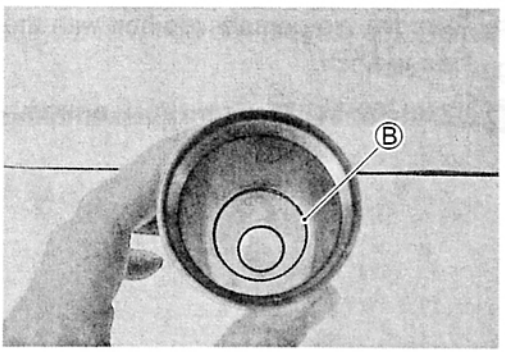

FORK SPRING

Measure the fork spring free length.
If it is shorter than the service limit, replace it with a new one.

DATA **Front fork spring free length:**
Service Limit: 231 mm (9.09 in)

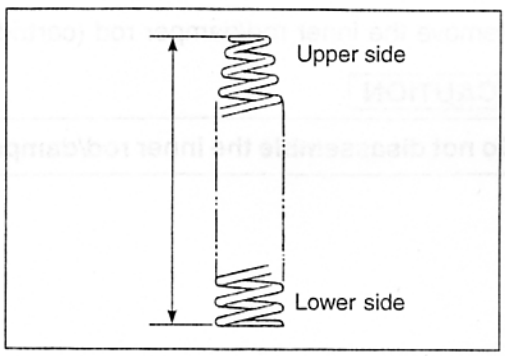

DAMPER ROD

Move the inner rod by hand to examine it for smoothness.
If any defects are found, replace inner rod/damper rod (cartridge) with a new one.

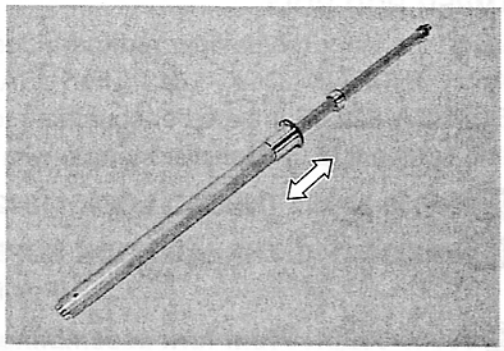

REASSEMBLY AND REMOUNTING

Reassemble and remount the front fork in the reverse order of removal and disassembly. Pay attention to the following points:

OIL SEAL AND DUST SEAL

- Install the dust seal, oil seal stopper ring, oil seal and oil seal retainer onto the inner tube.

① Dust seal
② Oil seal stopper ring
③ Oil seal
④ Oil seal retainer

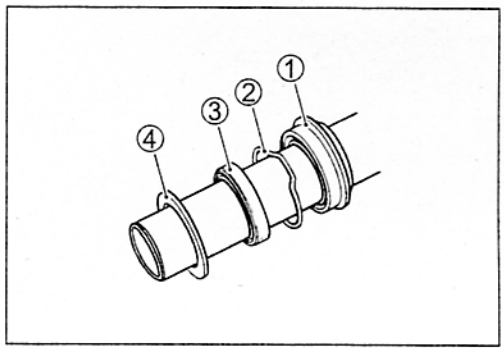

⚠ CAUTION

*** When installing the oil seal to outer tube, be careful not to damage the oil seal lip.**
*** Do not use solvents for washing to prevent oil seal damage.**
*** Apply fork oil to the Anti-friction metals and lip of the oil seal.**
*** Make sure that the oil seal stopper ring ③ has been fitted securely.**

- Insert the inner tube into the outer tube and fit the oil seal and dust seal with the special tool.

TOOL 09940-52861: Front fork oil seal installer

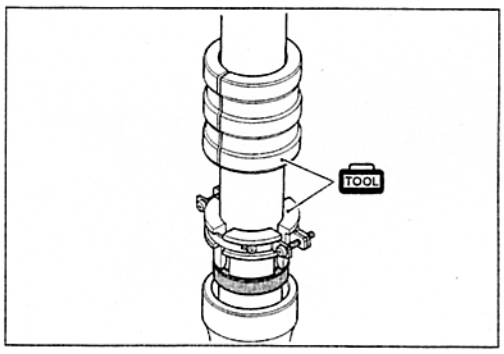

NOTE:
Stamped mark on the oil seal should face outside.

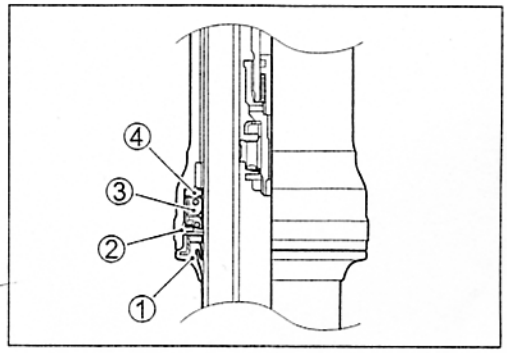

DAMPER ROD BOLT

- Insert the inner rod/damper rod (cartridge) into the inner tube.
- Apply THREAD LOCK "1342" (For USA) or THREAD LOCK SUPER "1322" (For the other countries) to the damper rod bolt and tighten it to the specified torque with the special tool.

1342 99000-32050: THREAD LOCK "1342" (For USA)

1322 99000-32110: THREAD LOCK SUPER "1322" (For the other countries)

TOOL 09940-30221: Front fork assembling tool

Damper rod bolt: 40 N·m (4.0 kgf·m, 29.0 lb-ft)

⚠ CAUTION

Use a new damper rod bolt gasket to prevent oil leakage.

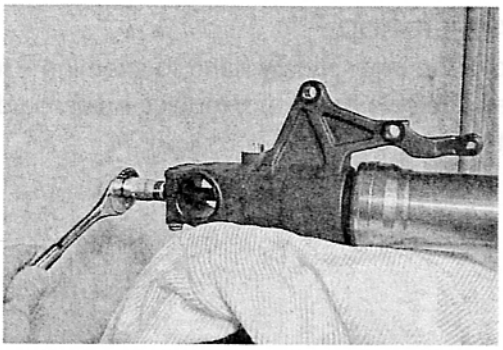

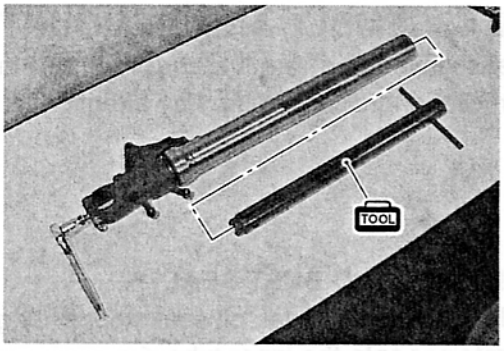

FORK OIL

- Place the front fork vertically without spring.
- Compress it fully.
- Pour specified front fork oil up to the top level of the outer tube.

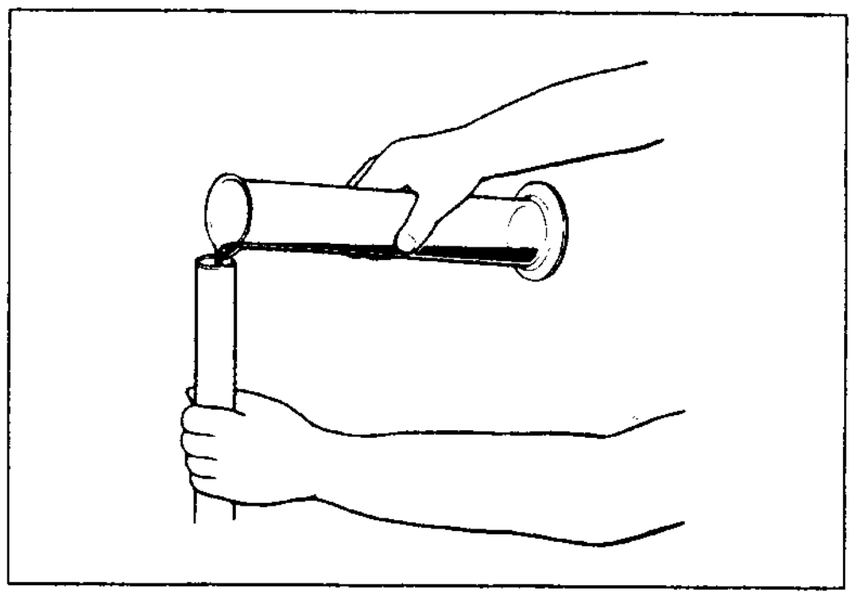

- Move the inner rod slowly with the special tool more than ten times until no more bubbles come out from the oil.

TOOL 09940-50120: Inner rod holder

NOTE:
Refill front fork oil up to the top of the outer tube to find bubbles while bleeding air.

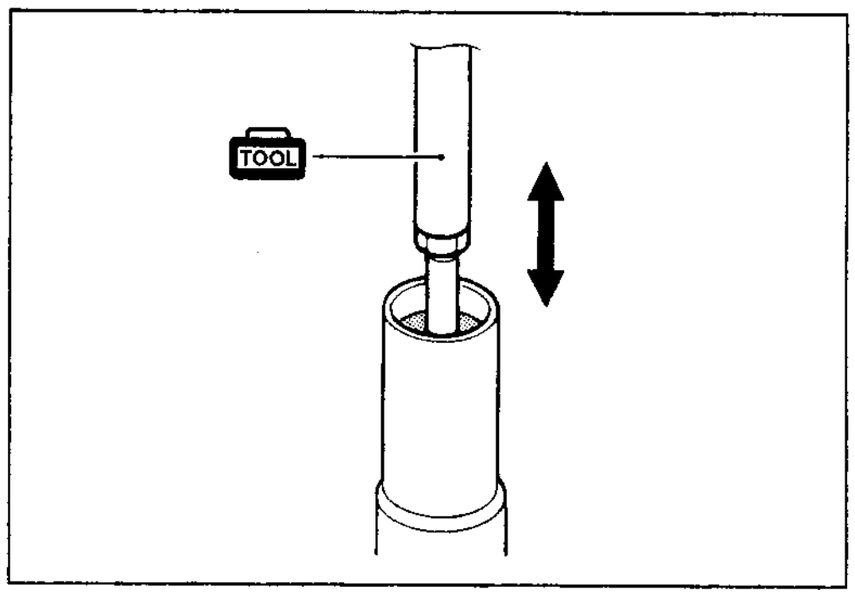

- Refill specified front fork oil up to the top level of the outer tube again. Move the outer tube up and down several strokes until no more bubbles come out from the oil.
- Keep the front fork vertically and wait 5 – 6 minutes.

NOTE:
* *Always keep oil level over the cartridge top end, or air may enter the cartridge during this procedure.*
* *Take extream attention to pump out air completely.*

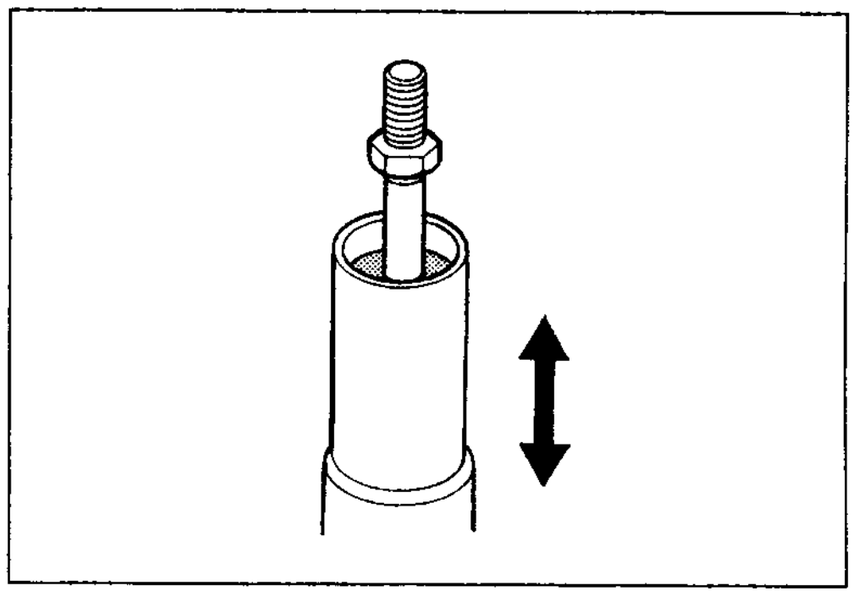

- Hold the front fork vertically and adjust fork oil level with the special tool.

NOTE:
When adjusting the fork oil level, compress the outer tube fully without the fork spring.

TOOL 09943-74111: Front fork oil level gauge

DATA Fork oil level: 90 mm (3.54 in)

FORK 99000-99044-L01: SUZUKI FORK OIL L01 or an equivalent fork oil

DATA Capacity (each leg): 517 ml (17.5/18.2 US/Imp oz)

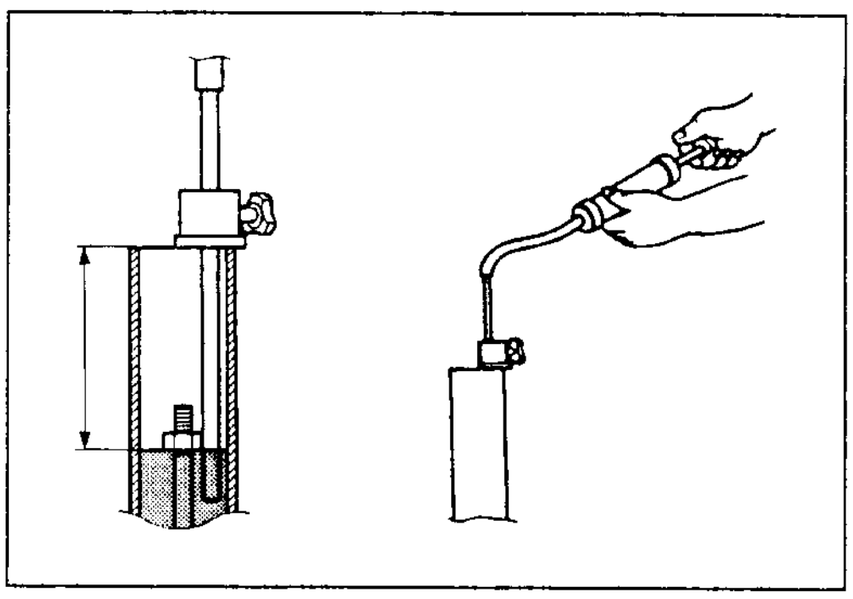

FRONT FORK INNER ROD LOCK NUT

- Adjust the height Ⓗ of the inner rod threads by turning the lock nut ① as shown in illustration.

Ⓗ: 11 mm (0.43 in)

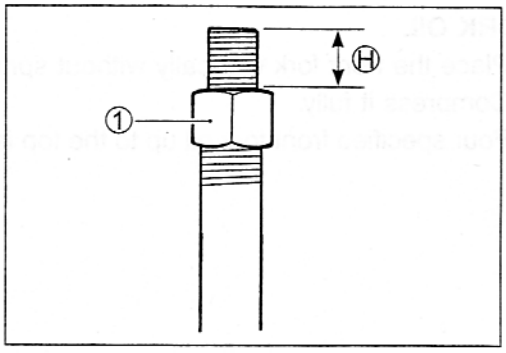

FORK SPRING

- Install the fork spring as shown in the illustration.
- Install the adjuster rod ②, the spring ③, the spring retainer ④ and the spacer ⑤.

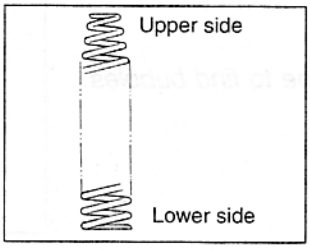

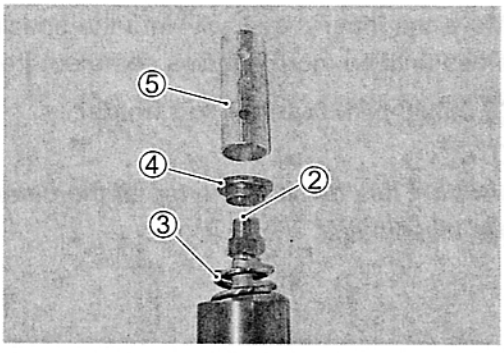

FRONT FORK CAP BOLT

- Pull up the inner rod with the special tool Ⓐ.
- Compress the spring with the special tool Ⓑ and then insert the special tool Ⓒ between the lock nut and the spacer.

TOOL 09940-50120: Inner rod holder Ⓐ
09940-94930: Front fork spacer holder Ⓑ
09940-94922: Stopper plate Ⓒ

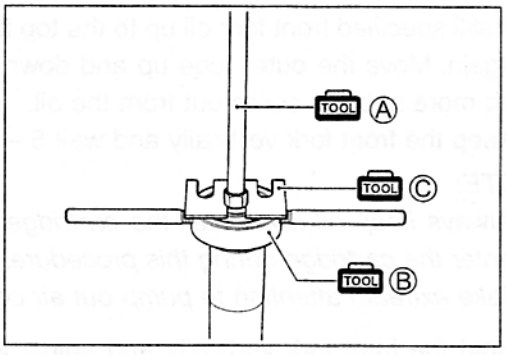

- Make sure that the height Ⓗ of the inner rod threads.

Ⓗ: 11 mm (0.43 in)

- Slowly turn the cap bolt completely by hand until the end of the cap bolt seats on the lock nut.

⚠ CAUTION

Be sure to adjust the rebound damping force adjuster ⑥ to the softest position before installing the cap bolt.

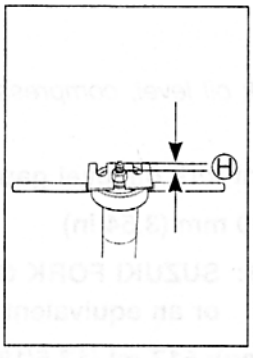

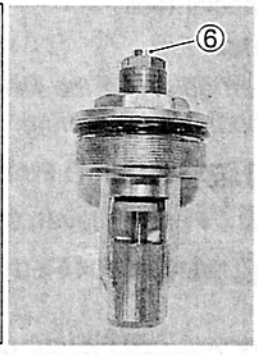

- Hold the cap bolt ⑦ and tighten the lock nut ① to the specified torque.

Inner rod lock nut: 29 N·m (2.9 kgf·m, 21.0 lb-ft)

- Remove the special tools.

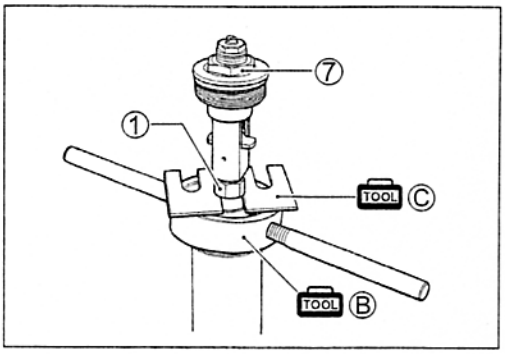

- Install the front fork cap bolt to the outer tube temporarily.
- Set the upper surface of the outer tube height Ⓐ at 6.0 mm (0.24 in) from the upper surface of the steering stem upper bracket and tighten the front fork lower clamp bolts to the specified torque.

Front fork lower clamp bolt: 23 N·m (2.3 kgf·m, 16.5 lb-ft)

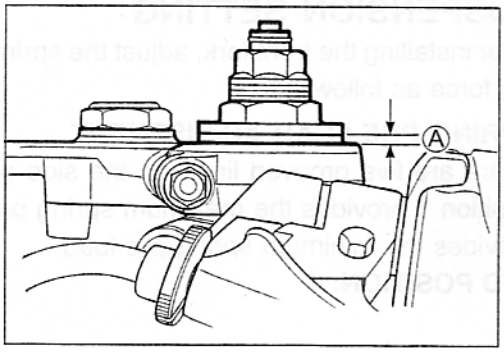

- Tighten the front fork cap bolt to the specified torque and recheck the front fork outer tube upper surface height Ⓐ from the upper surface of the steering stem upper bracket.

Front fork cap bolt: 23 N·m (2.3 kgf·m, 16.5 lb-ft)

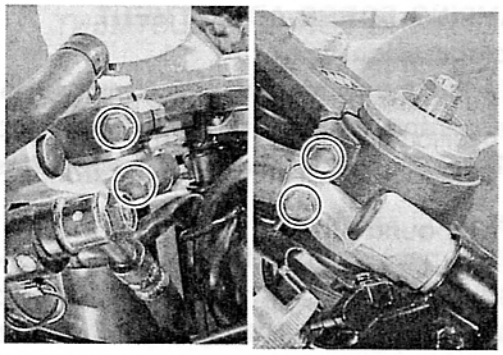

- Tighten the front fork upper clamp bolts and handlebar clamp bolts.

Front fork upper clamp bolt: 23 N·m (2.3 kgf·m, 16.5 lb-ft)
Handlebar clamp bolt: 23 N·m (2.3 kgf·m, 16.5 lb-ft)

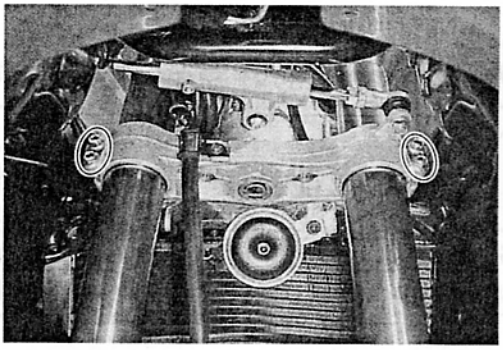

- Remount the front wheel. (☞6-10)

NOTE:
Before tightening the two axle pinch bolts on right front fork leg, move the front fork up and down 4 or 5 times.

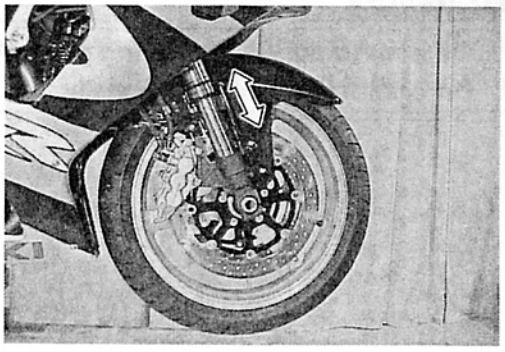

SUSPENSION SETTING

After installing the front fork, adjust the spring pre-load and damping force as follows.

SPRING PRE-LOAD ADJUSTMENT

There are five grooved lines on the side of the spring adjuster. Position 1 provides the maximum spring pre-load and position 5 provides the minimum spring pre-load.

STD POSITION: 4

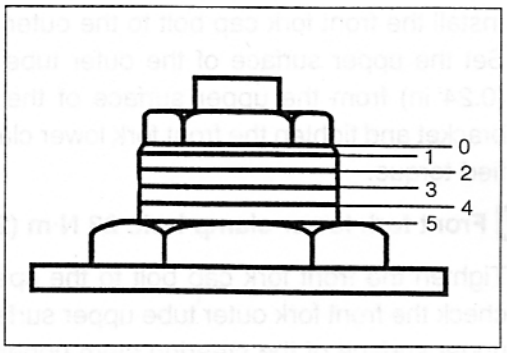

DAMPING FORCE ADJUSTMENT

(Compression side)

Fully turn the damping force adjuster ① clockwise. It is at stiffest position and turn it out to standard setting position.

STD POSITION: 10 clicks out from stiffest position.

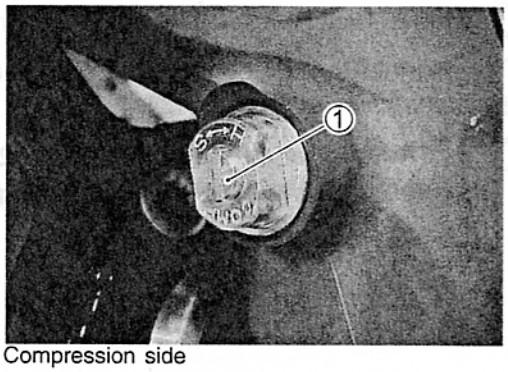

Compression side

(Rebound side)

Fully turn the damping force adjuster ② clockwise. It is at stiffest position and turn it out to standard setting position.

STD POSITION: 6 clicks out from stiffest position

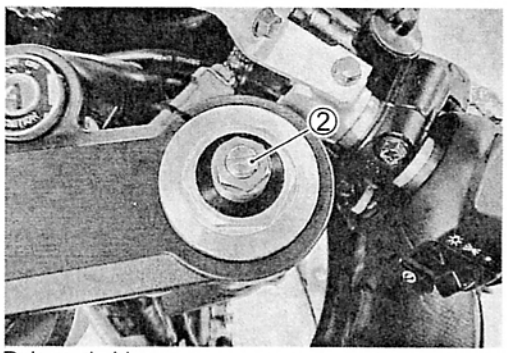

Rebound side

STANDARD FRONT SUSPENSION SETTING

	FRONT		
	Spring pre-load adjuster	Damping force adjuster	
		Compression	Rebound
Solo and dual riding	4	10 clicks out from stiffest position	6 clicks out from stiffest position

⚠ WARNING

Be sure to adjust the spring pre-load and damping force on both front fork legs equally.

STEERING DAMPER

CONSTRUCTION

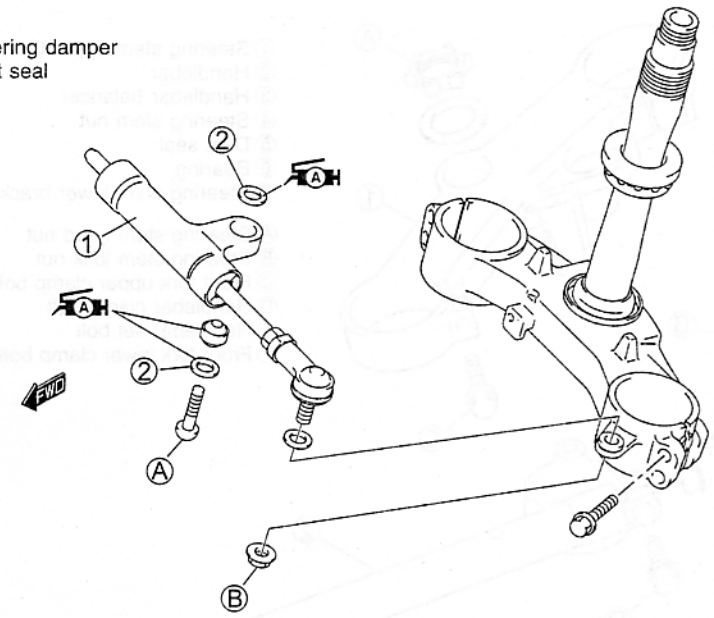

ITEM	N·m	kgf·m	lb-ft
Ⓐ	23	2.3	16.5
Ⓑ	23	2.3	16.5

REMOVAL

- Remove the body cowling cover and lower bracket cover. (☞6-3)
- Remove the nut ① by holding the nut ②.
- Remove the bolt ③ and remove the steering damper.

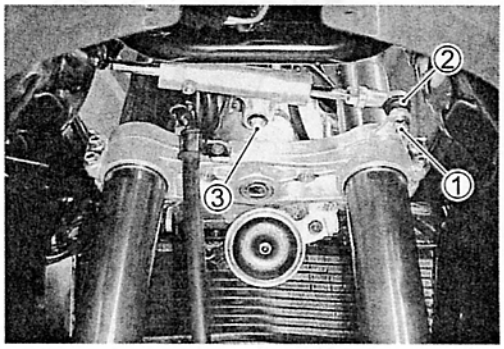

INSPECTION

Inspect the steering damper body, bearing and oil seal for damage and oil leaking.

Move the steering damper rod by hand to inspect for a smooth movement.

If any defects are found, replace the steering damper with a new one.

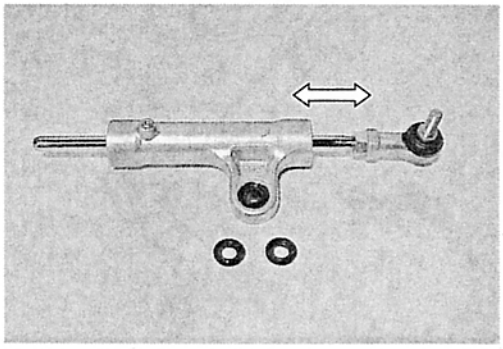

REMOUNTING

- Install the steering damper and tighten the bolt and nut.

Steering damper bolt and nut: 23 N·m (2.3 kgf·m, 16.5 lb-ft)

- Apply grease to the bearings and dust seals.

99000-25030: SUZUKI SUPER GREASE "A" (For USA)
99000-25010: SUZUKI SUPER GREASE "A" (For the other countries)

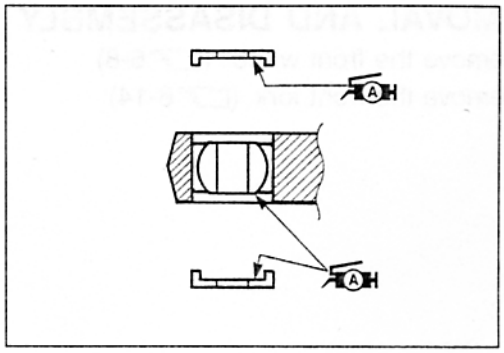

STEERING

CONSTRUCTION

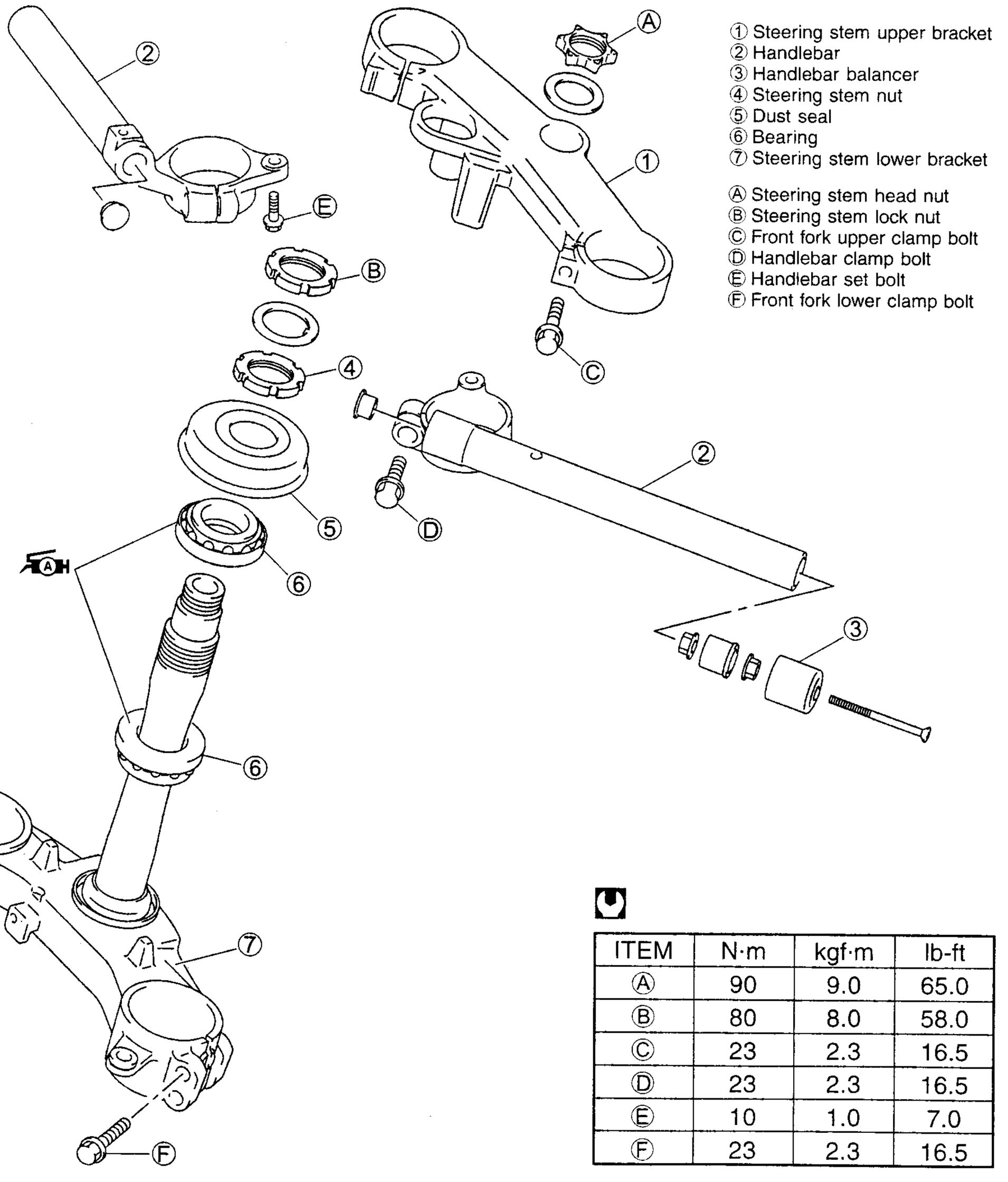

ITEM	N·m	kgf·m	lb-ft
Ⓐ	90	9.0	65.0
Ⓑ	80	8.0	58.0
Ⓒ	23	2.3	16.5
Ⓓ	23	2.3	16.5
Ⓔ	10	1.0	7.0
Ⓕ	23	2.3	16.5

REMOVAL AND DISASSEMBLY

- Remove the front wheel. (☞6-8)
- Remove the front fork. (☞6-14)

- Remove the left and right handlebars by removing its set bolts.
- Remove the left and right handlebar switch lead wires from the guide.

NOTE:
Place the rags under each handlebar to prevent scratching the body cowling and the air intake pipes.

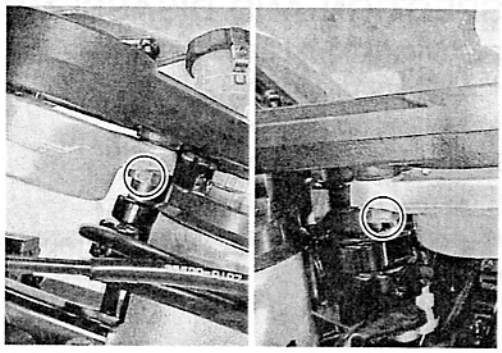

- Remove the steering stem upper bracket by removing its head nut.

NOTE:
It is not necessary to remove the ignition switch, only when replacing the steering stem lower bracket and bearings.
(Ignition switch removal: ☞ 7-30)

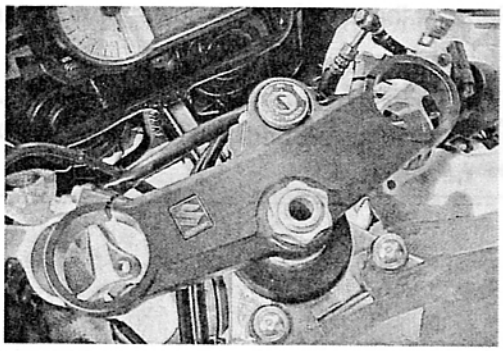

- Remove the brake hose clamp bolt.

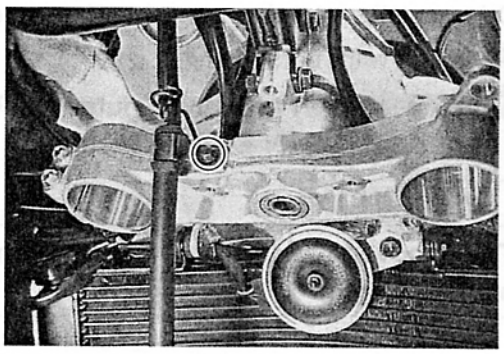

- Remove the steering stem lock nut, the washer and the steering stem nut with the special tools.

TOOL 09940-14911: Steering stem nut wrench
09940-14960: Steering stem nut wrench socket

- Draw out the steering stem lower bracket.

NOTE:
Hold the steering stem lower bracket by hand to prevent it from falling.

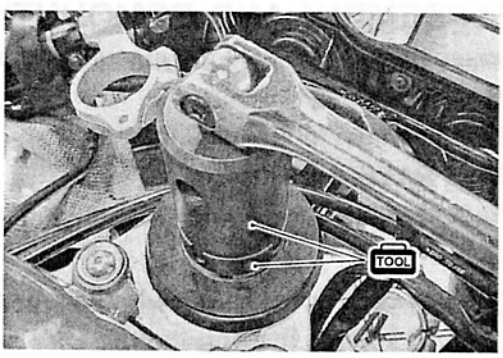

- Remove the dust seal ①, the steering stem upper bearing inner race ② and the bearing ③.

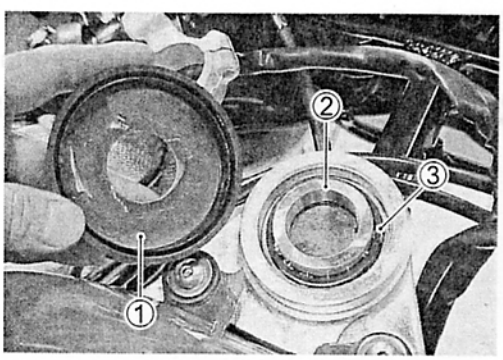

INSPECTION AND DISASSEMBLY

Inspect the removed parts for the following abnormalities.

* Handlebars distortion
* Race wear and brinelling
* Bearing wear or damage
* Abnormal noise of bearing

If any abnormal points are found, replace defective parts with the new ones.

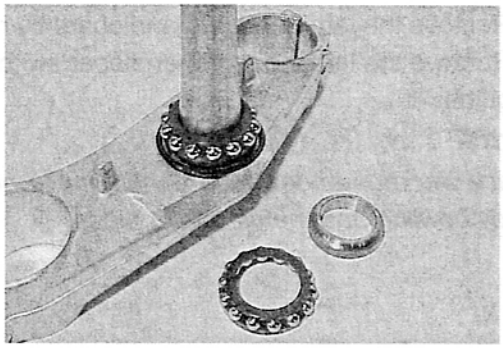

- Remove the steering stem lower bearing inner race with a chisel.

⚠ CAUTION

The removed bearing outer race must be replaced with a new one.

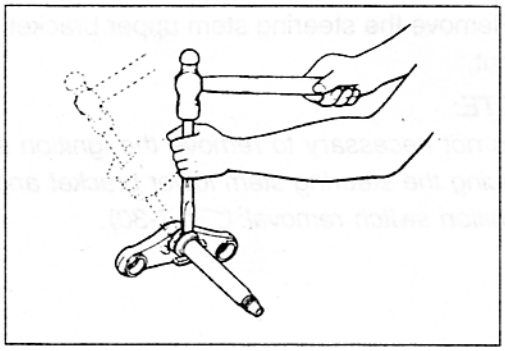

- Drive out the steering stem bearing outer races (upper and lower) with the special tools.

TOOL 09941-54911: Bearing outer race remover
09941-74910: Bearing installer

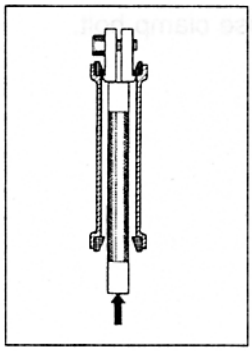

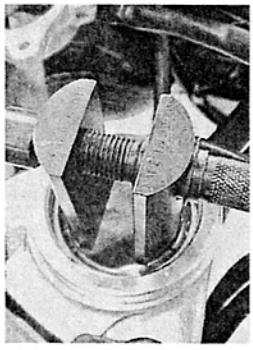

⚠ CAUTION

The removed bearing outer race must be replaced with a new one.

REASSEMBLY AND REMOUNTING

Reassemble and remount the steering stem in the reverse order of removal and disassembly.
Pay attention to the following points:

OUTER RACE

- Press in the upper and lower bearing outer races with the special tools.

TOOL 09941-34513: Steering outer race installer set
09913-70210: Bearing installer set

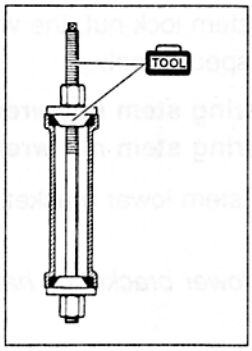

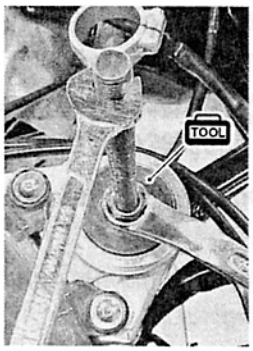

INNER RACE

- Press in the lower bearing inner race with the special tool.

TOOL 09925-18011: Steering bearing installer

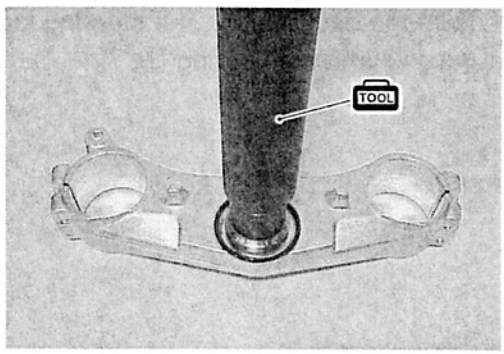

BEARING

- Apply grease to the bearings and bearing races.

99000-25030: SUZUKI SUPER GREASE "A" (For USA)
99000-25010: SUZUKI SUPER GREASE "A"
(For the other countries)

- Install the lower bearing to the steering stem lower bracket.
- Install the upper bearing and bearing inner race.

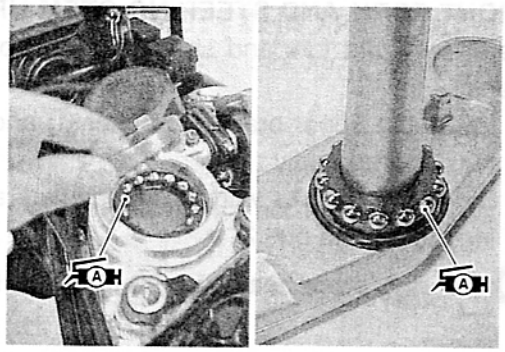

STEM NUT

- Install the dust seal.
- Tighten the steering stem nut to the specified torque with the special tools.

09940-14911: Steering stem nut wrench
09940-14960: Steering stem nut wrench socket

Steering stem nut: 45 N·m (4.5 kgf·m, 32.5 lb-ft)

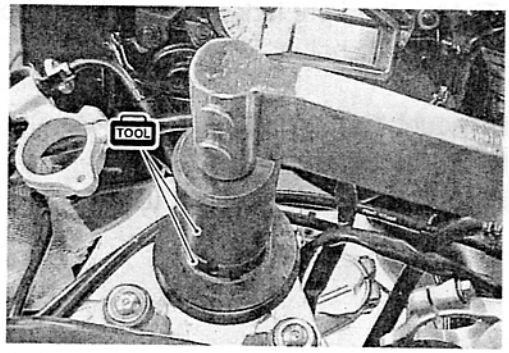

- Turn the steering stem lower bracket about five or six times to the left and right so that the angular ball bearings will be seated properly.
- Loosen the stem nut by 1/4 – 1/2 turn.

NOTE:
This adjustment will vary from motorcycle to motorcycle.

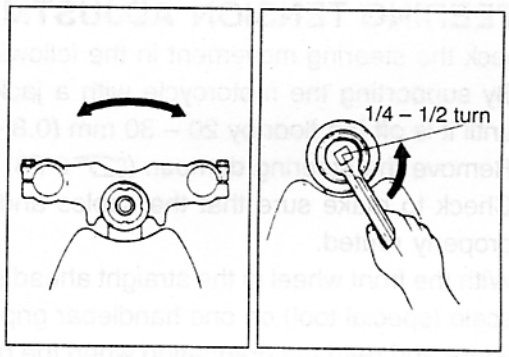

NOTE:
When installing the washer, align the stopper lug to the groove of the steering stem.

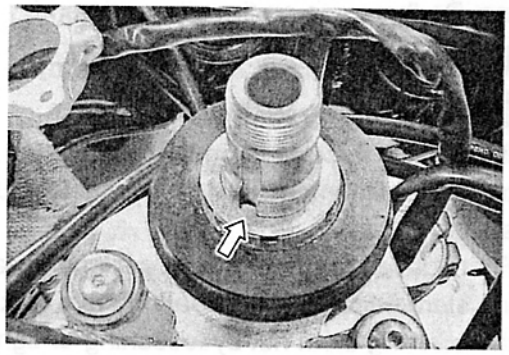

- Install the steering stem lock nut and tighten it to the specified torque with the special tools.

09940-14911: Steering stem nut wrench
09940-14960: Steering stem nut wrench socket

Steering stem lock nut: 80 N·m (8.0 kgf·m, 58.0 lb-ft)

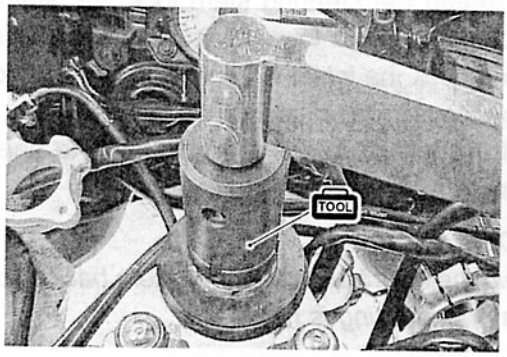

FRONT FORK AND STEERING STEM UPPER BRACKET

Install the front fork and steering stem upper bracket following steps:

1) Install the upper bracket, washer ① and steering stem head nut ② temporarily.
2) Set the front forks with the handlebars and tighten the steering stem head nut ②.

Steering stem head nut: 90 N·m (9.0 kgf·m, 65 lb-ft)

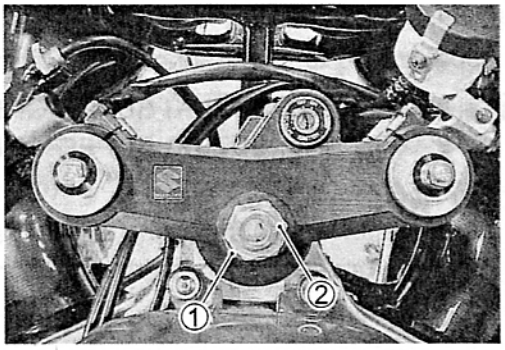

3) Tighten the front fork upper and lower clamp bolts and brake hose clamp bolt. (☞ 6-21)

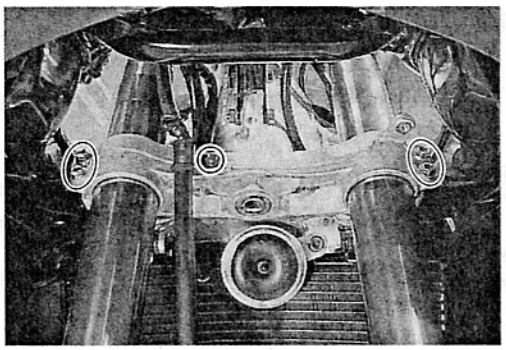

- Remount the handlebars. (☞6-30)
- Install the front wheel. (☞6-10)
- Install the steering damper. (☞6-23)

STEERING TENSION ADJUSTMENT

Check the steering movement in the following procedure.

- By supporting the motorcycle with a jack, lift the front wheel until it is off the floor by 20 – 30 mm (0.8 – 1.2 in).
- Remove the steering damper. (☞6-23)
- Check to make sure that the cables and wire harnesses are properly routed.
- With the front wheel in the straight ahead state, hitch the spring scale (special tool) on one handlebar grip end as shown in the figure and read the graduation when the handlebar starts moving. Do the same on the other grip end.

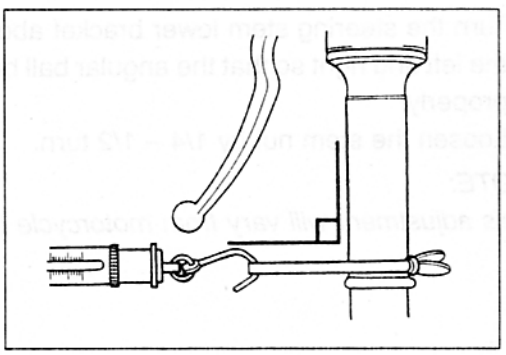

DATA Initial force: 200 – 500 grams

TOOL 09940-92720: Spring scale

- If the initial force read on the scale when the handlebar starts turning is either too heavy or too light, adjust it till it satisfies the specification.

1) First, loosen the front fork upper and lower clamp bolts, steering stem head nut and steering stem lock nut, and then adjust the steering stem nut by loosening or tightening it.
2) Tighten the steering stem lock nut, stem head nut and front fork upper and lower clamp bolts to the specified torque and re-check the initial force with the spring scale according to the previously described procedure.
3) If the initial force is found within the specified range, adjustment has been completed.

NOTE:
Hold the front fork legs, move them back and forth and make sure that the steering is not loose.

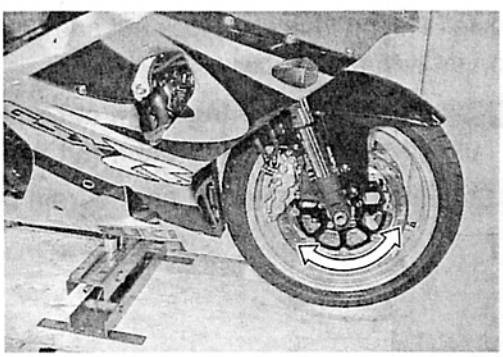

HANDLEBAR

CONSTRUCTION

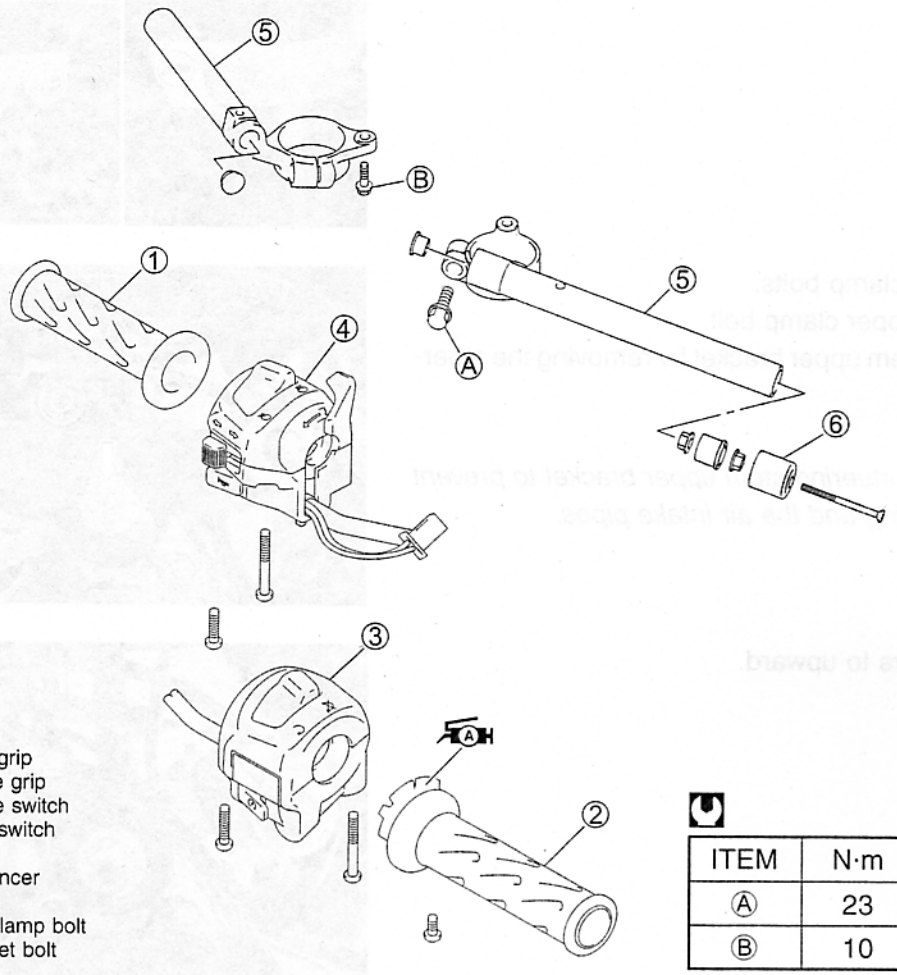

① Left handle grip
② Right handle grip
③ Right handle switch
④ Left handle switch
⑤ handlebar
⑥ Handle balancer

Ⓐ Handlebar clamp bolt
Ⓑ Handlebar set bolt

ITEM	N·m	kgf·m	lb-ft
Ⓐ	23	2.3	16.5
Ⓑ	10	1.0	7.0

REMOVAL AND DISASSEMBLY

RIGHT HANDLEBAR

- Remove the brake master cylinder ①. (☞6-58)
- Remove the right handle switch ②.
- Remove the handle balancer ③.
- Remove the right handle grip ④.

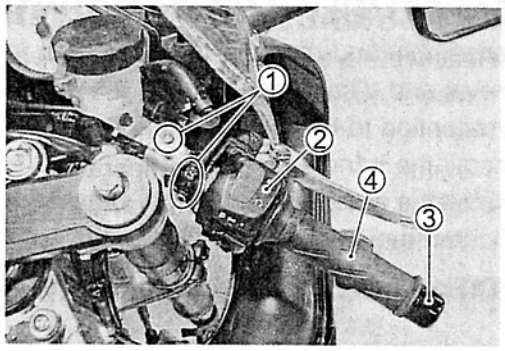

LEFT HANDLEBAR

- Remove the left handle switch ①.
- Remove the handle balancer ②.
- Remove the left handle grip ③.
- Remove the clutch lever holder ④.

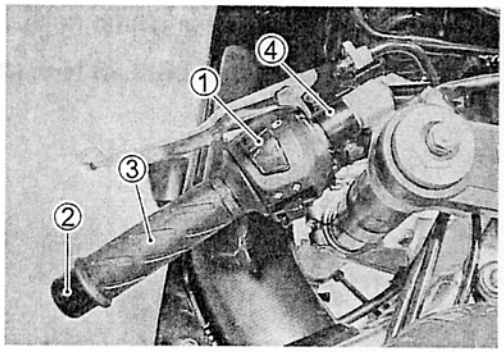

- Remove the handlebar set bolts.

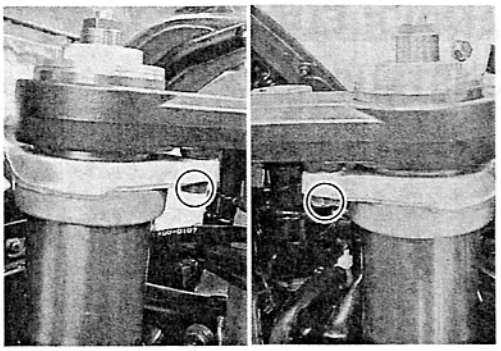

- Loosen the handlebar clamp bolts.
- Loosen the front fork upper clamp bolt.
- Remove the steering stem upper bracket by removing the steering stem head nut.

NOTE:
Place the rags under the steering stem upper bracket to prevent scratching the body cowling and the air intake pipes.

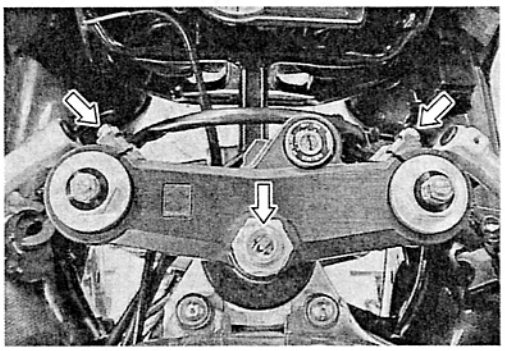

- Draw out the handlebars to upward.

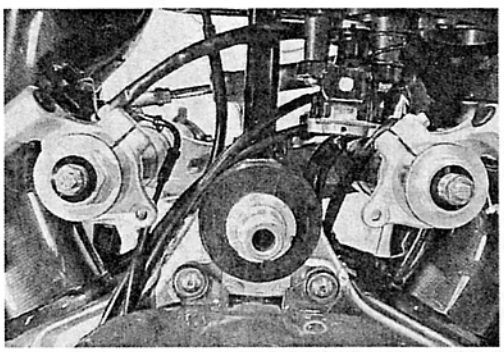

REASSEMBLY AND REMOUNTING

Reassemble and remount the handlebar in the reverse order of removal and disassembly.
Pay attention to the following points:

- Install the handlebars temporaly.
- Install the steering stem upper bracket.
- Tighten the steering stem head nut.

Steering stem head nut: 90 N·m (9.0 kgf·m, 65.0 lb-ft)

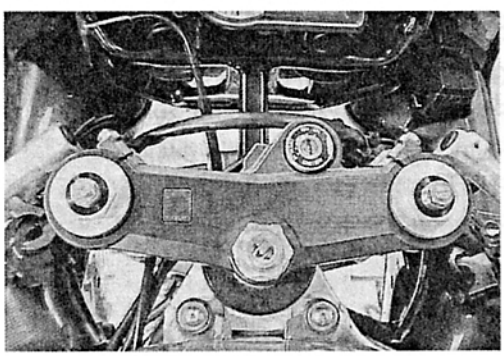

- Tighten the front fork upper clamp bolts.

Front fork upper clamp bolt: 23 N·m (2.3 kgf·m, 16.5 lb-ft)

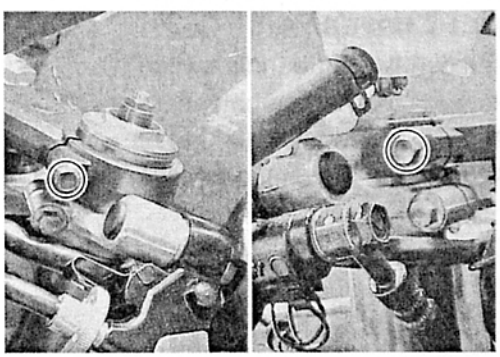

- Tighten the handlebar set bolts.

Handlebar set bolt: 10 N·m (1.0 kgf·m, 7.0 lb-ft)

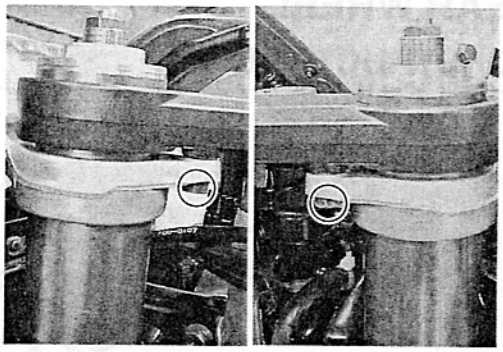

- Tighten the handlebar clamp bolts.

Handlebar clamp bolt: 23 N·m (2.3 kgf·m, 16.5 lb-ft)

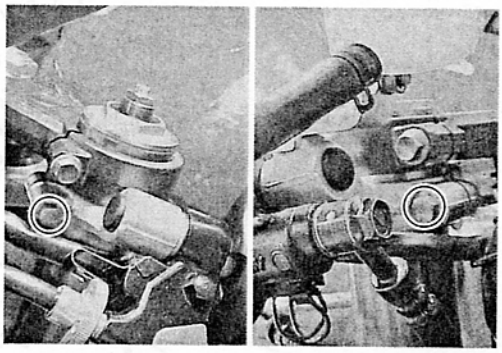

- When remounting the clutch lever holder, align the holder's mating surface with punch mark Ⓐ on the handlebar.

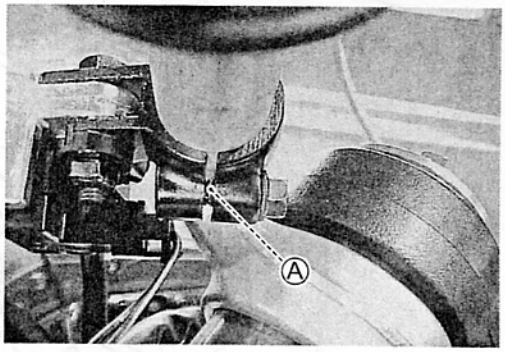

- Install the front brake master cylinder. (☞ 6-60)
- When remounting the brake master cylinder, align the holders mating surface with punch mark Ⓑ on the handlebar.

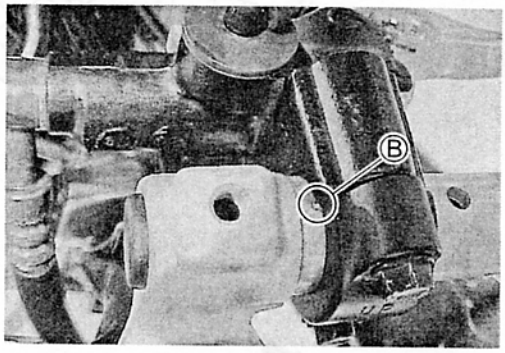

- Apply the grease to the throttle cables and their holder.

99000-25030: SUZUKI SUPER GREASE "A" (For USA)
99000-25010: SUZUKI SUPER GREASE "A"
(For the other countries)

- When remounting the right and left handle switches, engage the stopper with the handlebar hole.

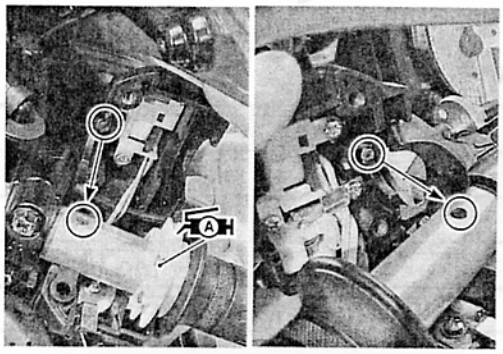

REAR WHEEL

CONSTRUCTION

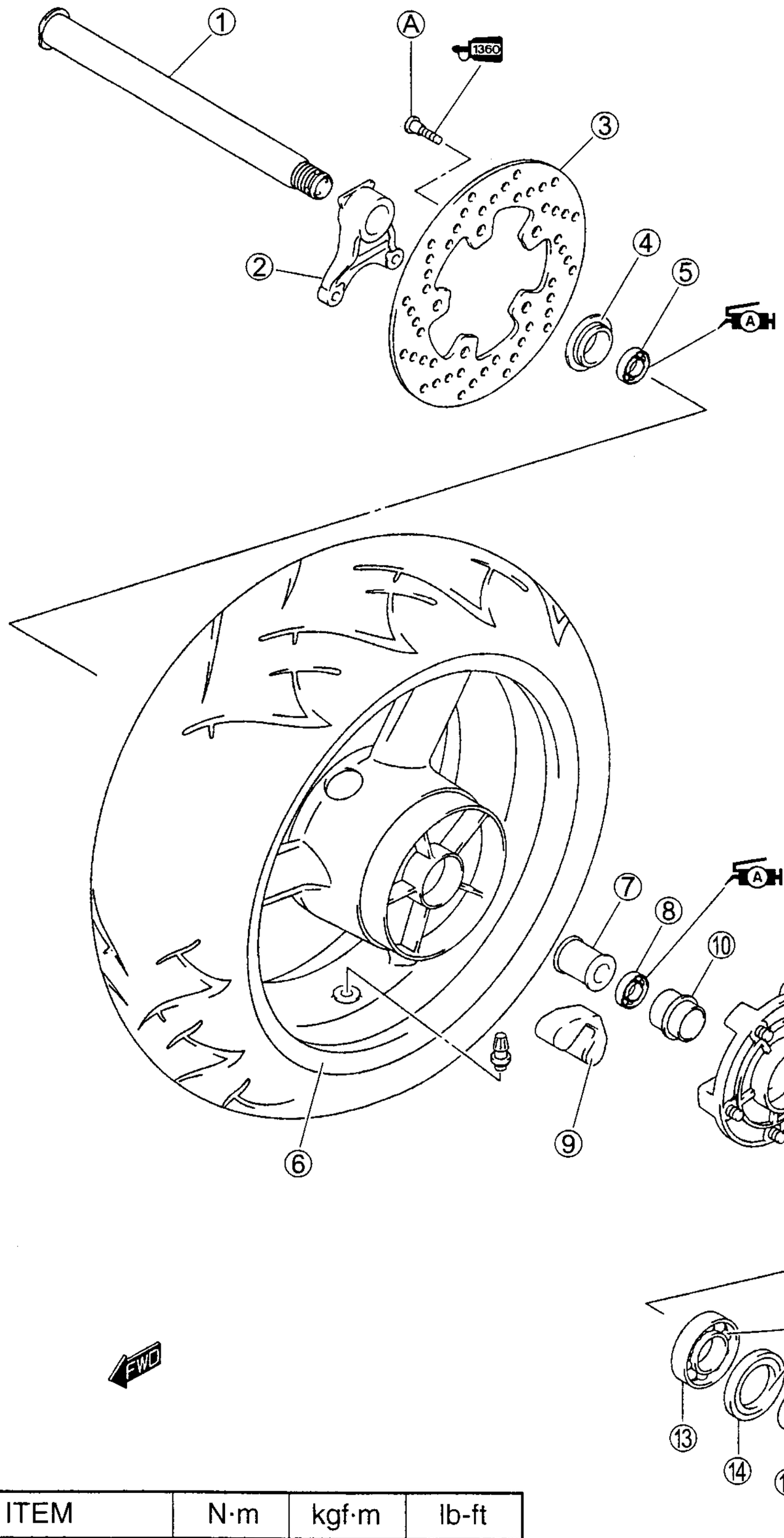

① Rear axle
② Caliper bracket
③ Brake disc
④ Collar
⑤ Bearing
⑥ Rear wheel
⑦ Spacer
⑧ Bearing
⑨ Cushion
⑩ Spacer
⑪ Sprocket drum
⑫ Sprocket
⑬ Bearing
⑭ Dust seal
⑮ Collar

Ⓐ Brake disc bolt
Ⓑ Rear sprocket nut
Ⓒ Rear axle nut

ITEM	N·m	kgf·m	lb-ft
Ⓐ	35	3.5	25.5
Ⓑ	60	6.0	43.5
Ⓒ	100	10.0	72.5

REMOVAL

- Remove the cotter pin. (For Canada and USA)
- Loosen the axle nut.
- Raise the rear wheel off the ground and support the motorcycle with a jack or wooden block.
- Remove the axle nut and draw out the rear axle.

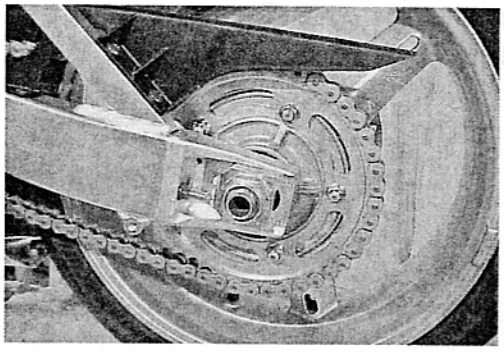

- Remove the rear wheel by disengaging the drive chain.

⚠ CAUTION

Do not operate the brake pedal while removing the rear wheel.

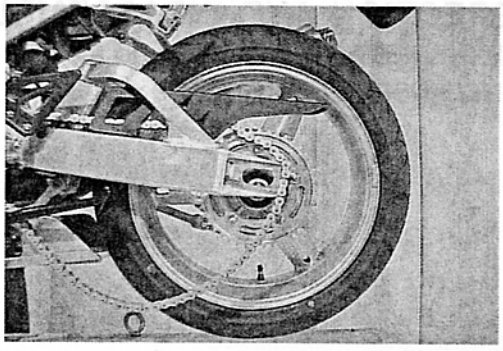

- Remove the collar ①.
- Loosen the rear sprocket mounting bolt and separate the rear sprocket ② from its mounting drum ③.
- Draw out the rear sprocket mounting drum ③ from the wheel hub.

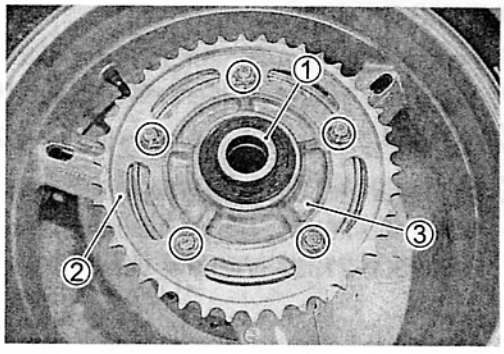

- Remove the rear sprocket mounting drum retainer ④.

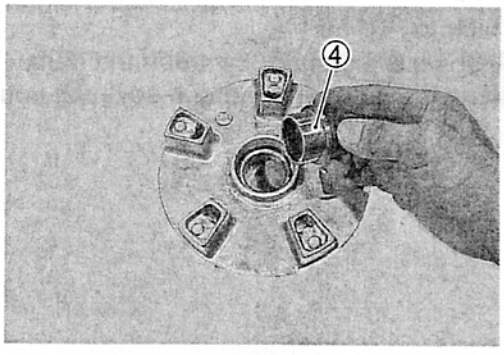

- Remove the dust seal by using special tool.

TOOL 09913-50121: Oil seal remover

⚠ CAUTION

The removed dust seal must be replaced with a new one.

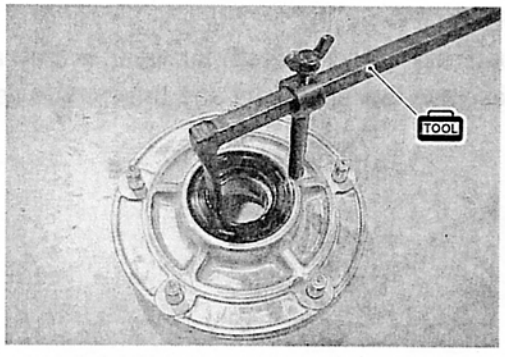

- Remove the collar ①.
- Remove the brake disc ②.

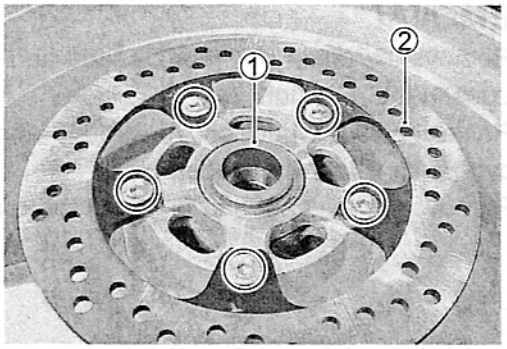

INSPECTION AND DISASSEMBLY

TIRE INSPECTION: ☞2-24 and 6-67
WHEEL INSPECTION: ☞6-9 and 67

REAR AXLE

Using a dial gauge, check the rear axle for runout.
If the runout exceeds the limit, replace the rear axle.

DATA **Axle shaft runout: Service Limit: 0.25 mm (0.010 in)**

TOOL **09900-20607: Dial gauge (1/100 mm)**
09900-20701: Magnetic stand
09900-21304: V-block set (100 mm)

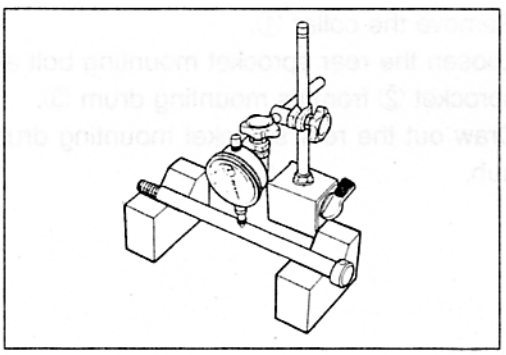

WHEEL DAMPER

Inspect the damper for wear and damage.
Replace the damper if there is anything unusual.

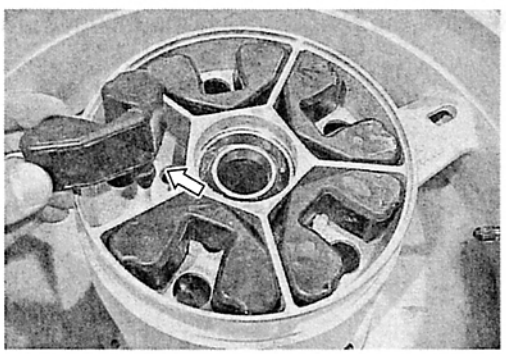

SPROCKET

Inspect the sprocket teeth for wear. If they are worn as shown, replace the two sprockets and drive chain as a set.

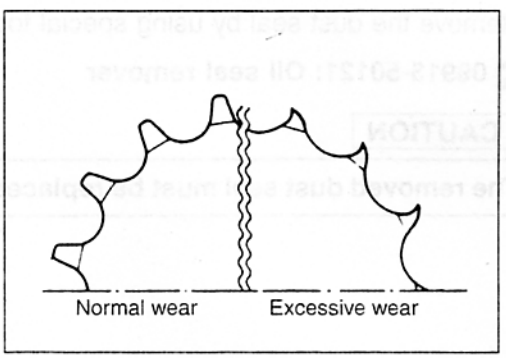

BEARINGS

Inspect the play of the wheel and sprocket mounting drum bearings by hand while they are in the wheel and drum. Rotate the inner race by hand to inspect for abnormal noise and smooth rotation. Replace the bearing if there is anything unusual.

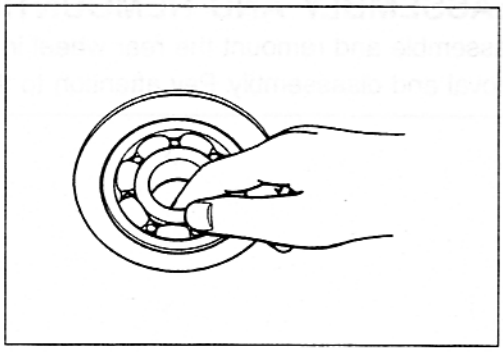

- Remove the sprocket mounting drum bearing and wheel bearings by using the special tool.

TOOL 09921-20240: Bearing remover set

⚠ CAUTION

The removed bearings must be replaced with new ones.

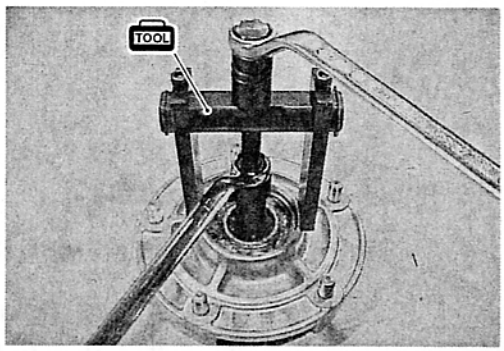

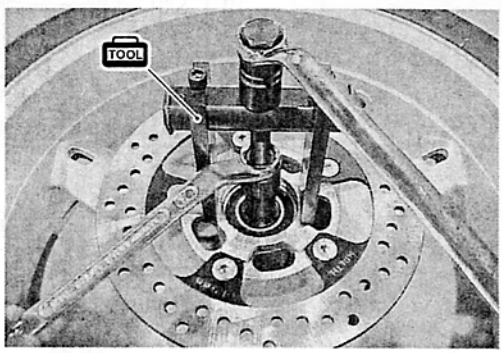

REASSEMBLY AND REMOUNTING

Reassemble and remount the rear wheel in the reverse order of removal and disassembly. Pay attention to the following points:

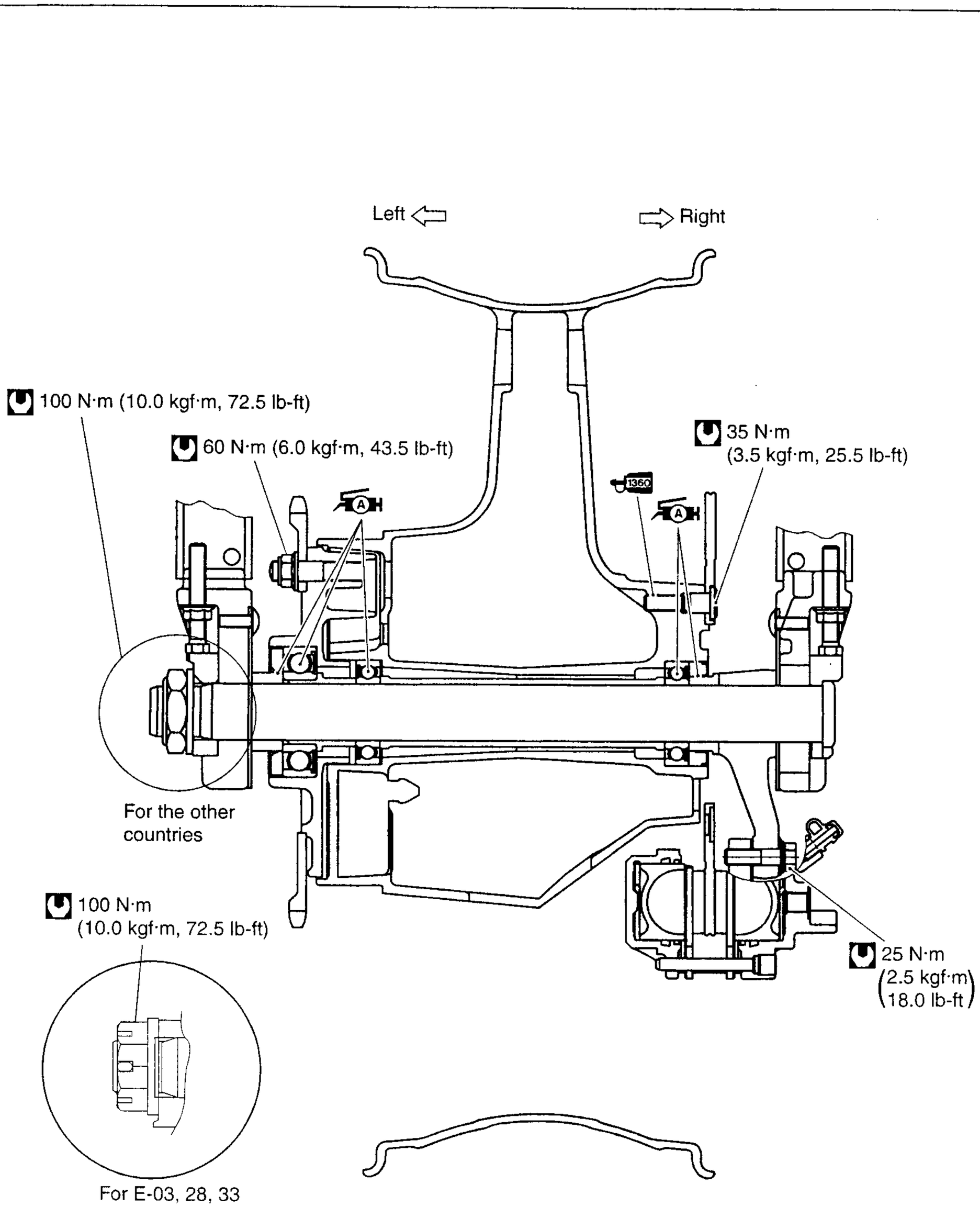

BEARINGS

- Apply grease to the bearings before installing.

99000-25030: SUZUKI SUPER GREASE "A" (For USA)
99000-25010: SUZUKI SUPER GREASE "A"
(For the other countries)

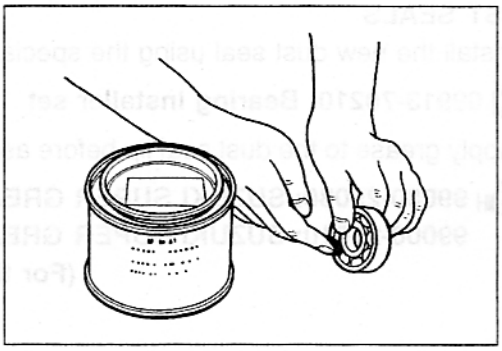

- Install the new bearing to the sprocket mounting drum using the special tool.

09924-84510: Bearing installer set

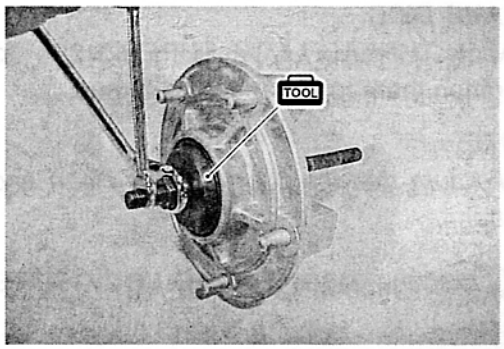

- First install the right wheel bearing, then install the left wheel bearing using the special tool.

09941-34513: Bearing/Steering race installer set

⚠ CAUTION

The sealed cover of the bearing must face outside.

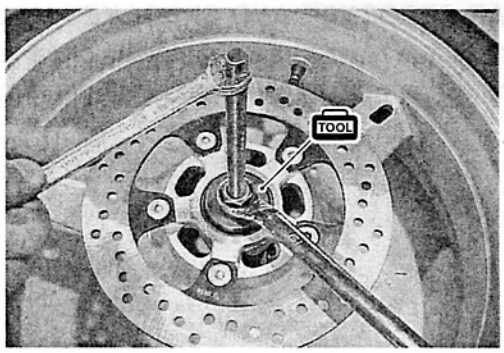

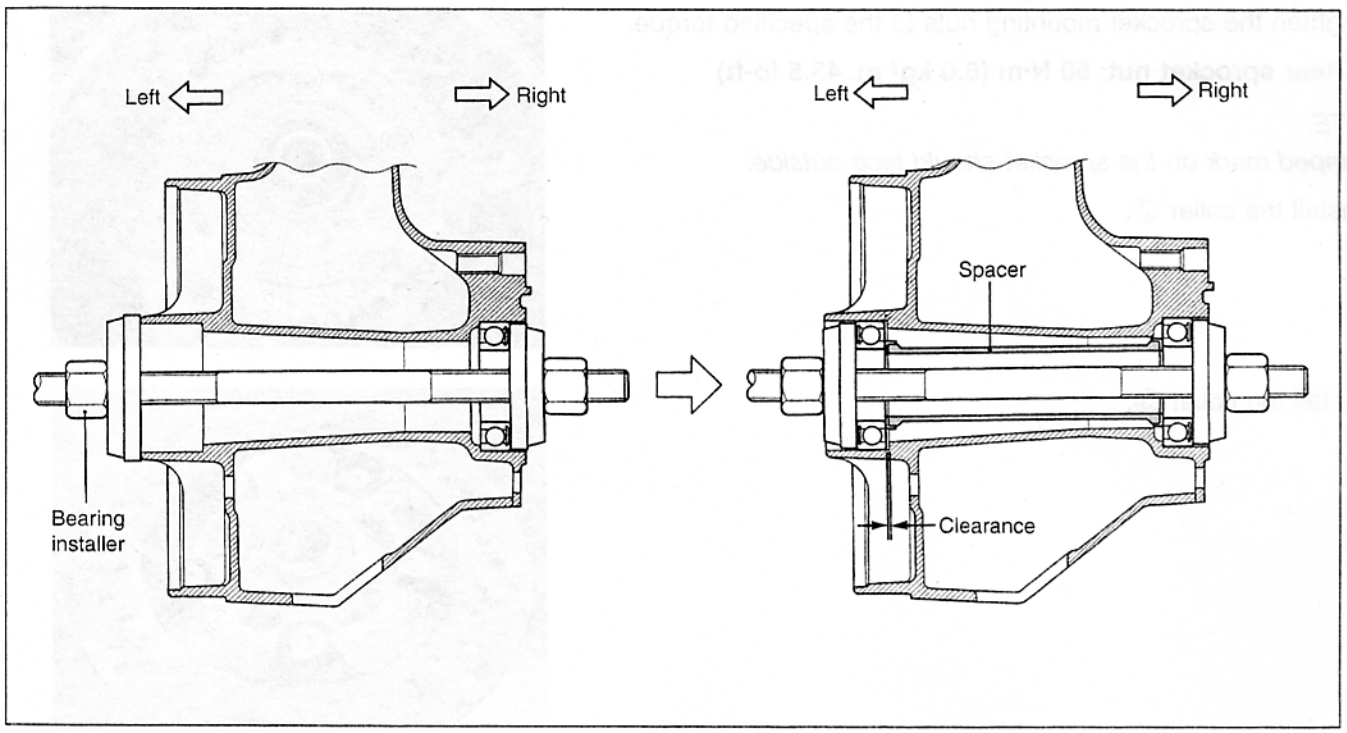

DUST SEALS

- Install the new dust seal using the special tool.

09913-70210: Bearing installer set

- Apply grease to the dust seal lip before assembling rear wheel.

99000-25030: SUZUKI SUPER GREASE "A" (For USA)
99000-25010: SUZUKI SUPER GREASE "A" (For the other countries)

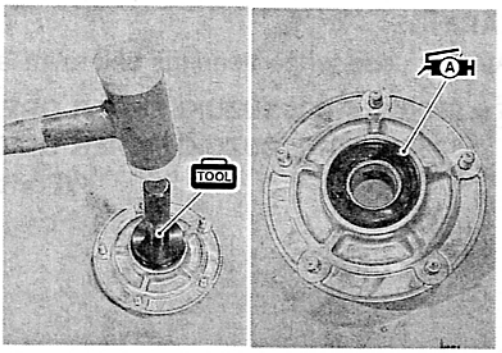

BRAKE DISC

- Apply THREAD LOCK SUPER "1360" to the disc bolts and tighten them to the specified torque.

NOTE:
Make sure that the brake disc is clean and free of any greasy matter.

1360 99000-32130: THREAD LOCK SUPER "1360"

Brake disc bolt: 35 N·m (3.5 kgf·m, 25.5 lb-ft)

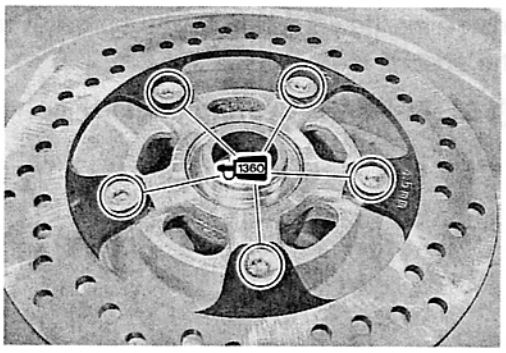

REAR SPROCKET AND SPROCKET MOUNTING DRUM

- Install the rear sprocket mounting drum retainer ①.
- Install the rear sprocket mounting drum to the rear wheel.

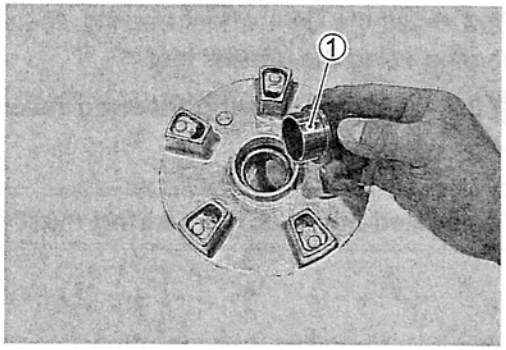

- Tighten the sprocket mounting nuts to the specified torque.

Rear sprocket nut: 60 N·m (6.0 kgf·m, 43.5 lb-ft)

NOTE:
Stamped mark on the sprocket should face outside.

- Install the collar ②.

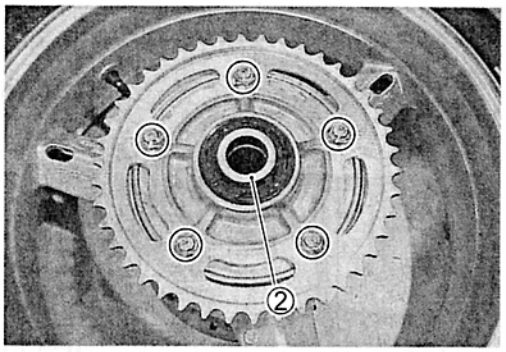

- Install the collar ③.

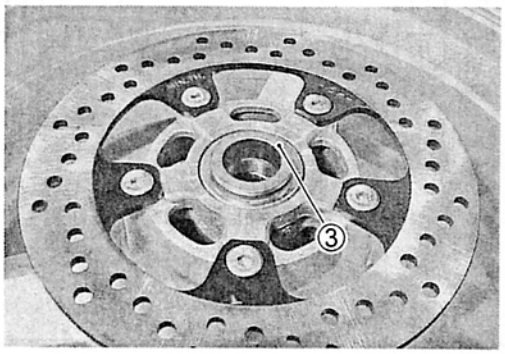

REAR AXLE

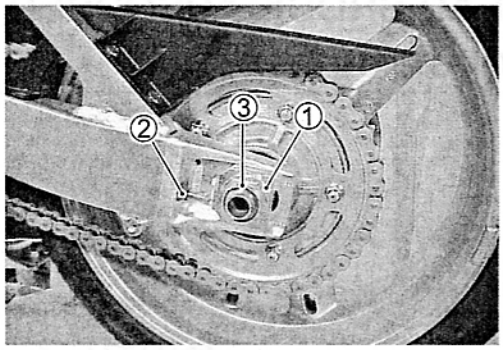

- Remount the rear wheel and rear axle shaft, install the washer ① and rear axle nut ③.
- Adjust the chain slack after rear wheel installation. (☞2-19)
- Tighten both chain adjuster lock nuts ② securely.
- Tighten the rear axle nut ③ to the specified torque.

Rear axle nut: 100 N·m (10.0 kgf·m, 72.5 lb-ft)

- Install the new cotter pin. (For E-03, 28, 33)

REAR SHOCK ABSORBER

CONSTRUCTION

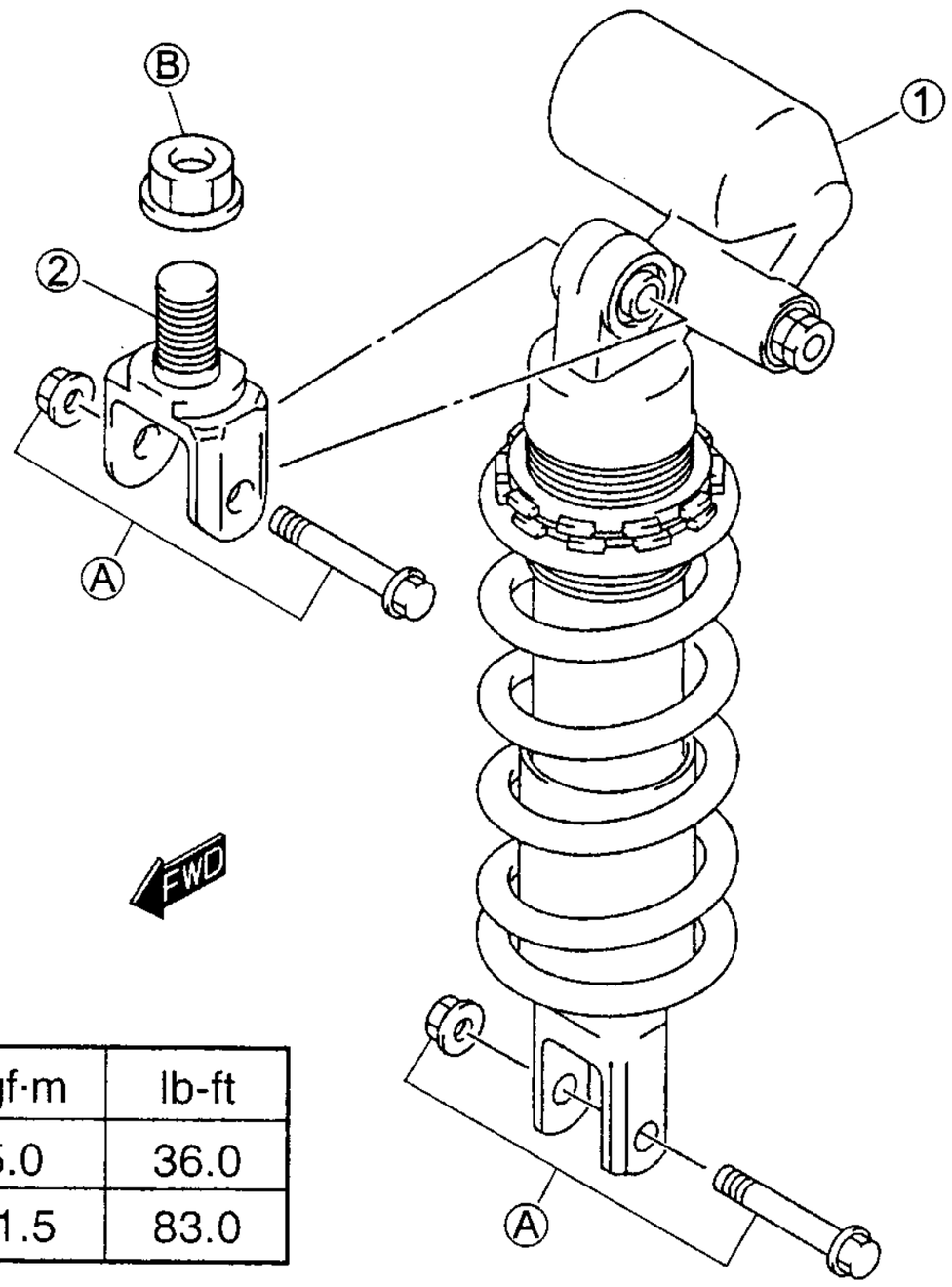

① Rear shock absorber
② Rear shock absorber bracket

Ⓐ Rear shock absorber mounting bolt/nut
Ⓑ Rear shock absorber bracket nut

ITEM	N·m	kgf·m	lb-ft
Ⓐ	50	5.0	36.0
Ⓑ	115	11.5	83.0

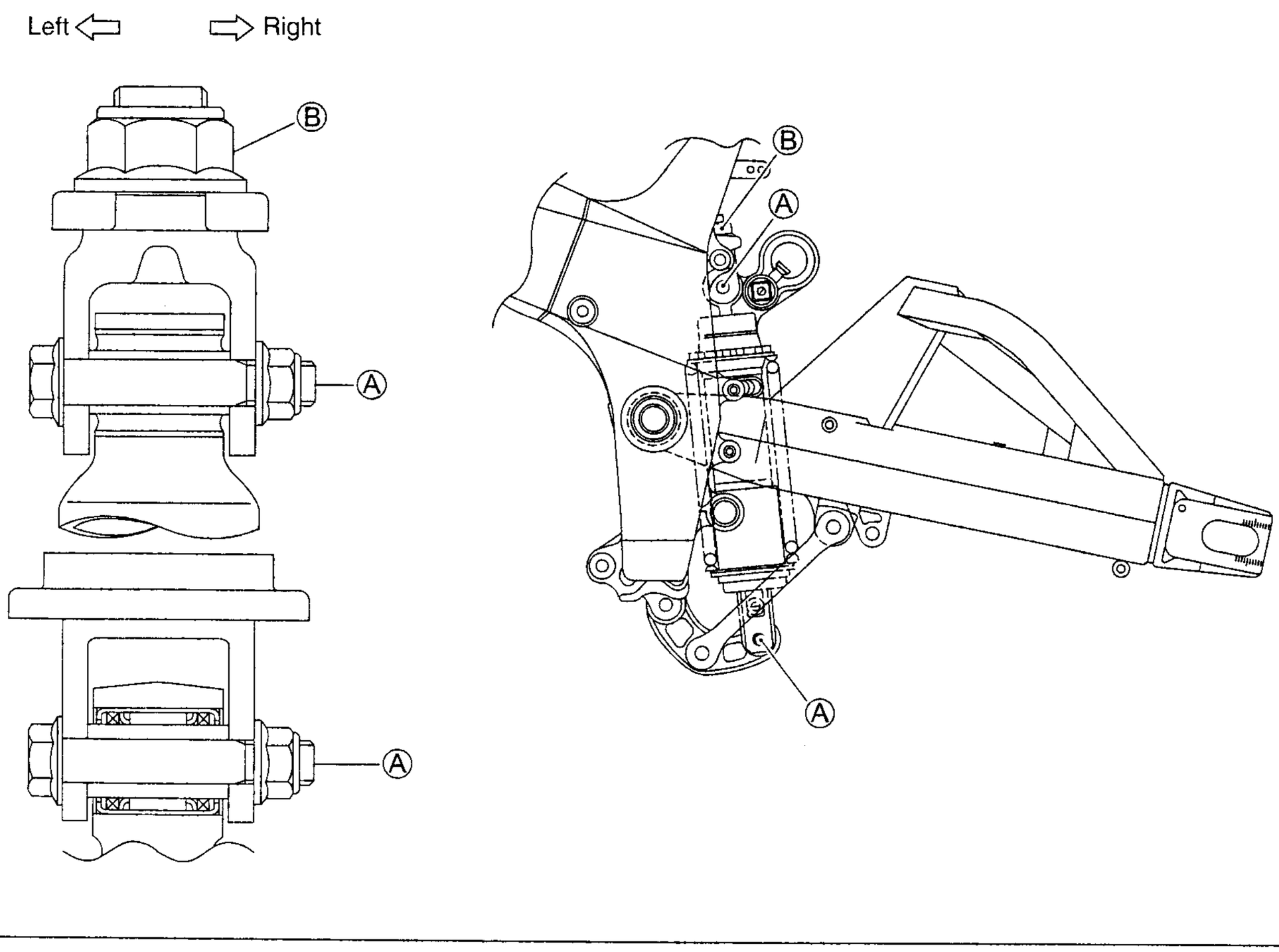

REMOVAL

- Support the motorcycle with a jack to be no load for the rear shock absorber.
- Remove the rear shock absorber upper and lower mounting bolt and nut.

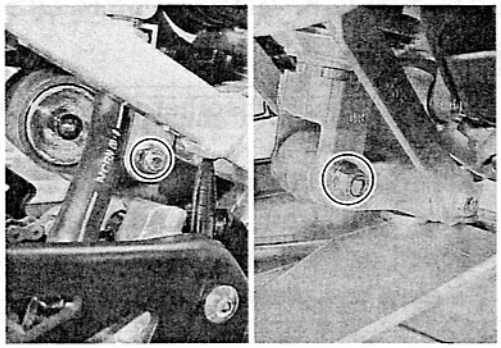

- Take out the rear shock absorber.

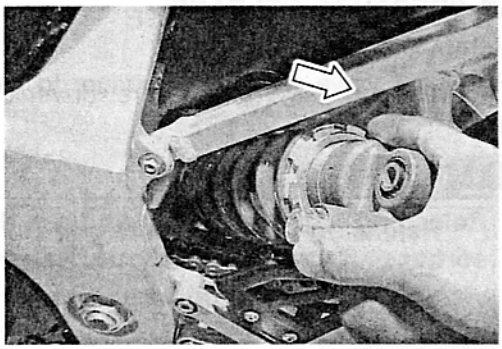

INSPECTION

Inspect the shock absorber body and bushing for damage and oil leakage.

If any defects are found, replace the shock absorber with a new one.

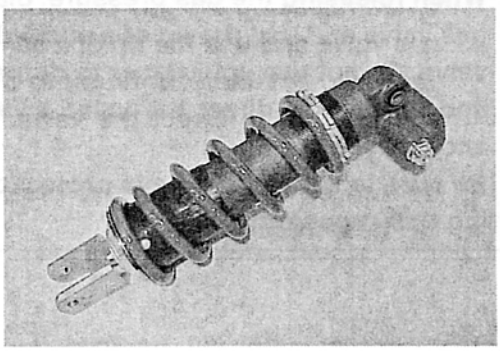

⚠ CAUTION

Do not attempt to disassemble the rear shock absorber unit. It is unserviceable.

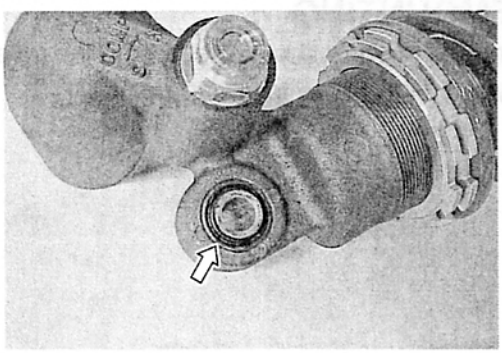

REAR SHOCK ABSORBER DISPOSAL

⚠ WARNING

*** The rear shock absorber unit contains high-pressure nitrogen gas.**
*** Mishandling can cause explosion.**
*** Keep away from fire and heat. High gas pressure caused by heat can cause an explosion.**
*** Release gas pressure before disposing.**

GAS PRESSURE RELEASE

- Remove the valve cap.
- Press the valve with a screwdriver to bleed out the nitrogen gas.

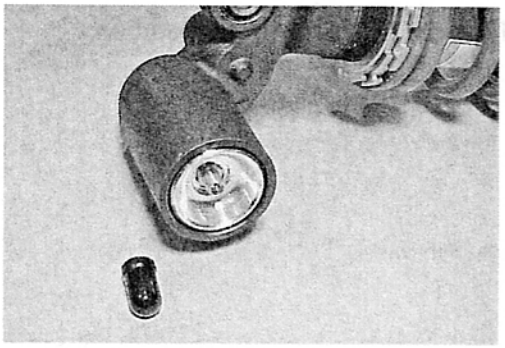

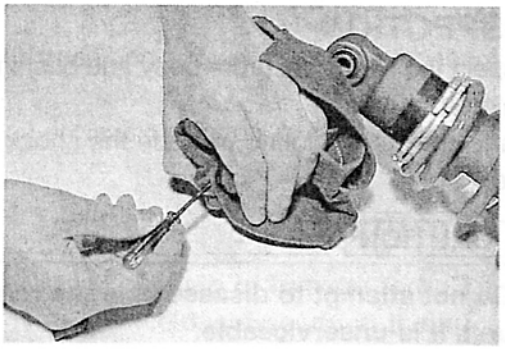

⚠ WARNING

*** Releasing high pressure gas from the rear shock absorber unit can be hazardous. Never perform any servicing until the nitrogen gas pressure has been released from the rear shock absorber unit.**
*** When releasing the gas pressure, place a rag over the gas valve and use the tip of a screwdriver to press the valve. Do not use your finger to depress the gas valve, and be sure to direct the valve away from your face and body.**
*** Be sure to always wear eye protection when performing this procedure.**

REMOUNTING

Remount the rear shock absorber in the reverse order of removal.
Pay attention to the following points:

- Install the rear shock absorber and tighten the rear shock absorber upper/lower mounting bolts and nuts.

Rear shock absorber mounting nut:
50 N·m (5.0 kgf·m, 36.0 lb-ft)

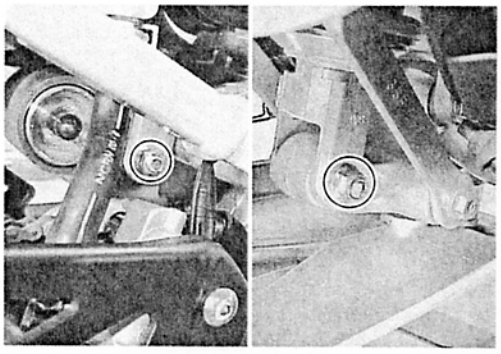

SUSPENSION SETTING

After installing the rear suspension, adjust the spring pre-load and damping force as follows.

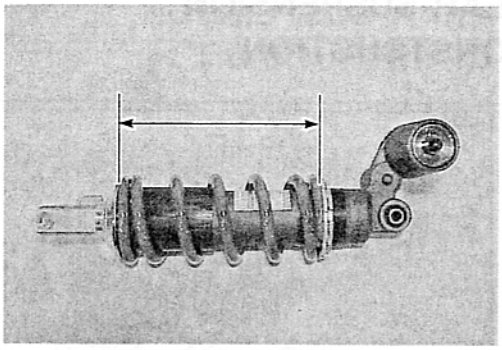

SPRING PRE-LOAD ADJUSTMENT

The set length 172 mm (6.77 in) provides the maximum spring pre-load.

The set length 182 mm (7.17 in) provides the minimum spring pre-load.

STD LENGTH: 177 mm (6.97 in)

DAMPING FORCE ADJUSTMENT

(Rebound side)

Fully turn the damping force adjuster ① clockwise. It is at stiffest position and turn it out to standard setting position.

STD POSITION: 7 clicks out from stiffest position

[Fine-tune the adjuster by turning it slightly until two punch marks align.]

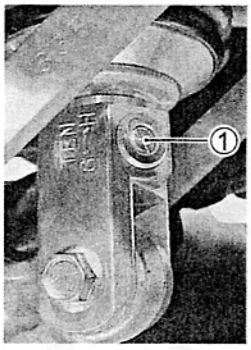

Rebound side

(Compression side)

Fully turn the damping force adjuster ② clockwise. It is at stiffest position and turn it out to standard setting position.

STD POSITION: 8 clicks out from stiffest position

[Fine-tune the adjuster by turning it slightly until two punch marks align.]

Compression side

STANDARD SUSPENSION SETTING

	REAR		
	Spring set length	Damping force adjuster	
		Rebound	Compression
Solo and dual riding	177 mm (6.97 in)	7 clicks out from stiffest position	8 clicks out from stiffest position

REAR SUSPENSION
CONSTRUCTION

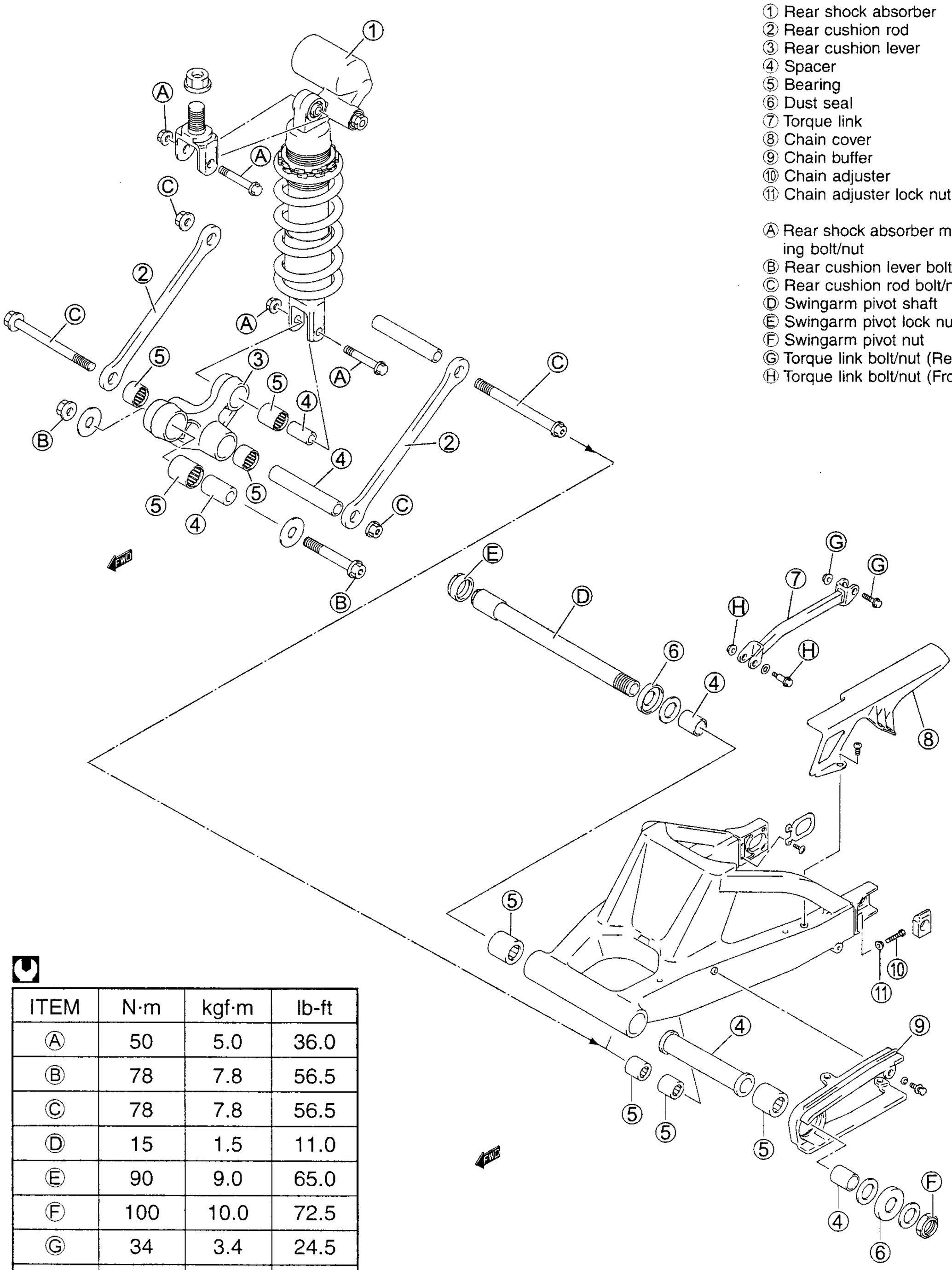

ITEM	N·m	kgf·m	lb-ft
Ⓐ	50	5.0	36.0
Ⓑ	78	7.8	56.5
Ⓒ	78	7.8	56.5
Ⓓ	15	1.5	11.0
Ⓔ	90	9.0	65.0
Ⓕ	100	10.0	72.5
Ⓖ	34	3.4	24.5
Ⓗ	28	2.8	20.5

REMOVAL

- Raise the rear wheel off the ground and support the motorcycle with a jack or a wooden block.
- Remove the rear wheel. (☞ 6-33)
- Remove the side stand.

NOTE:
It is necessary to remove the side-stand, only when replacing the cusion lever.

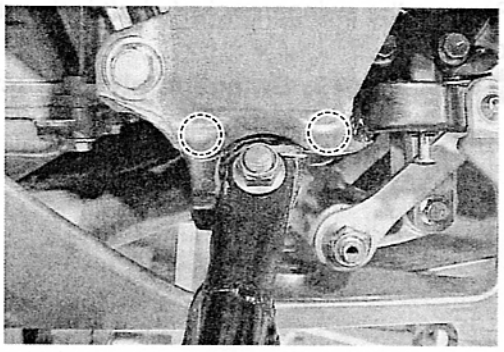

- Remove the rear brake hose union bolt.
- Remove the rear brake caliper along with its bracket by removing the torque link bolts.

⚠ CAUTION

Completely wipe off any brake fluid adhering to any part of motorcycle. The fluid reacts chemically with paint, plastics, rubber materials, etc., and will damage them severely.

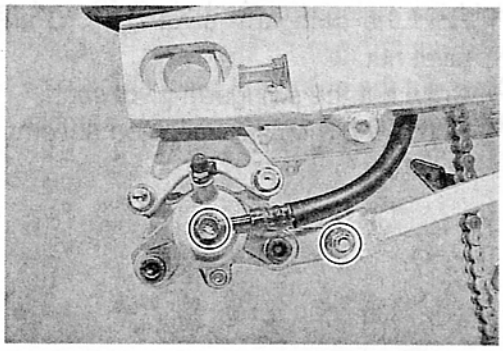

- Remove the brake hose guides.

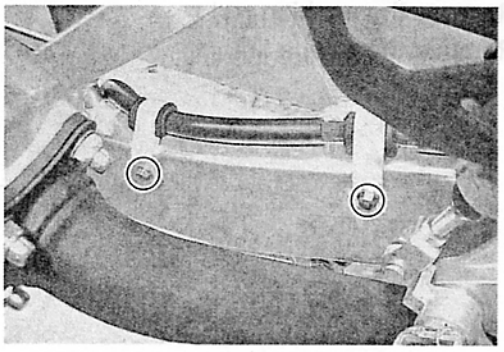

- Cut the drive chain. (☞ 6-70)

NOTE:
It is necessary to cut the drive chain, only when replacing drive chain or swingarm.

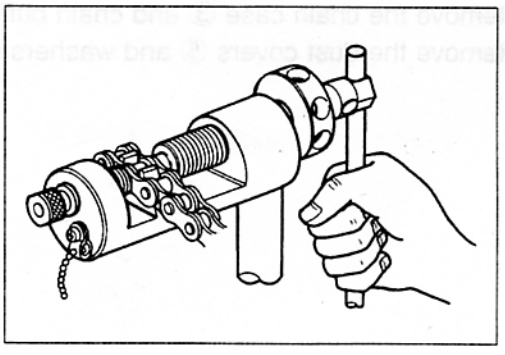

- Remove the cushion lever mounting bolt/nut and rear shock absorber lower mounting bolt/nut.
- Remove the cusion lever.

NOTE:
Slightly loosen the cushion lever mounting bolt/nut Ⓐ to facilitate later disassembly.

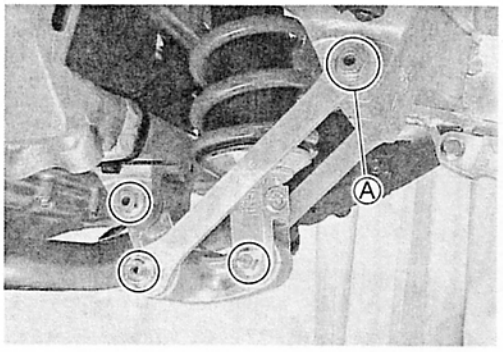

- Remove the swingarm pivot shaft lock nut by using the special tool.

TOOL **09940-14940: Swingarm pivot thrust adjuster socket wrench**

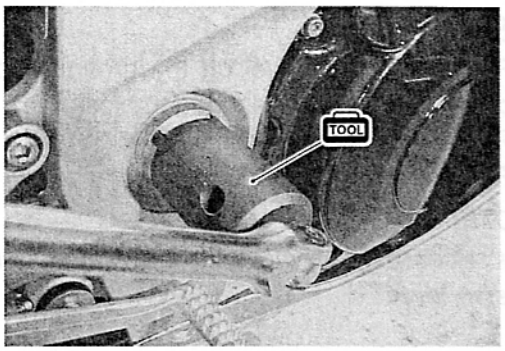

- Hold the swingarm pivot shaft ① and remove the swingarm pivot nut ②.
- Draw out the swingarm pivot shaft.
- Remove the rear suspension assembly.

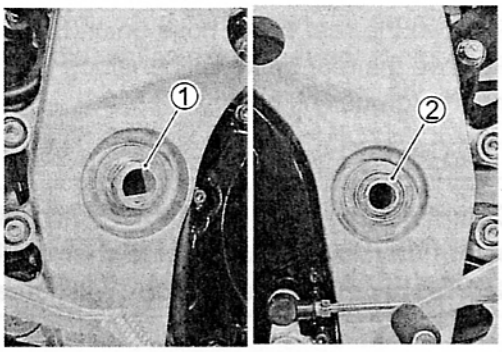

- Remove the cushion rod.
- Remove the torque link.

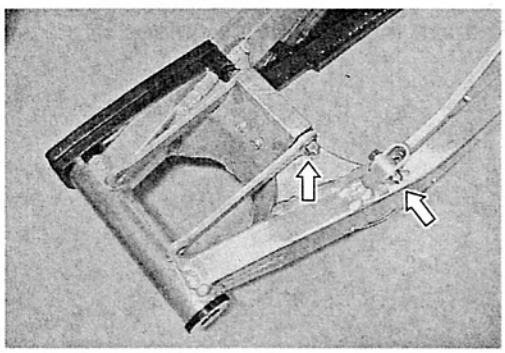

- Remove the chain case ③ and chain buffer ④.
- Remove the dust covers ⑤ and washers ⑥.

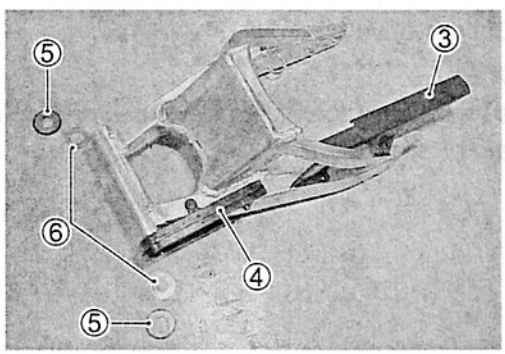

INSPECTION AND DISASSEMBLY

SPACER

- Remove the spacers from swingarm.
- Remove the spacers from the cushion lever.
- Inspect the spacers for any flaws or other damage. If any defects are found, replace the spacers with new ones.

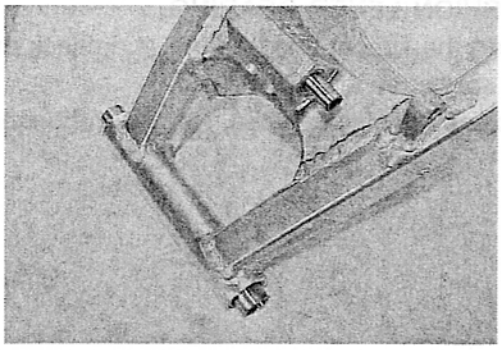

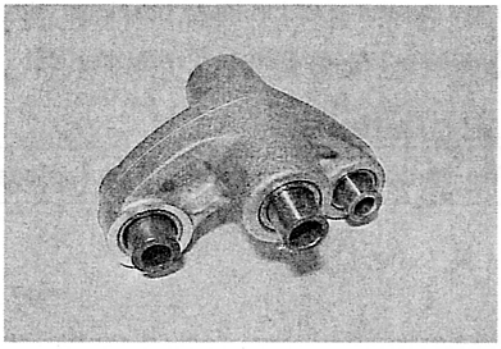

SWINGARM BEARING

Insert the spacer into bearing and check the play when moving the spacer up and down.
If excessive play is noted, replace the bearing with a new one.

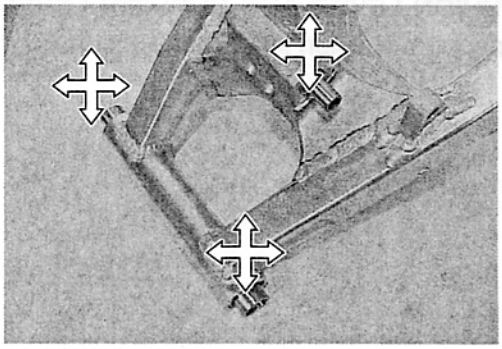

- Draw out the swingarm pivot bearings ① and the swingarm cushion rod upper bearings ② with the special tool.

TOOL 09921-20240: Bearing remover set

⚠ CAUTION

The removed bearings must be replaced with new ones.

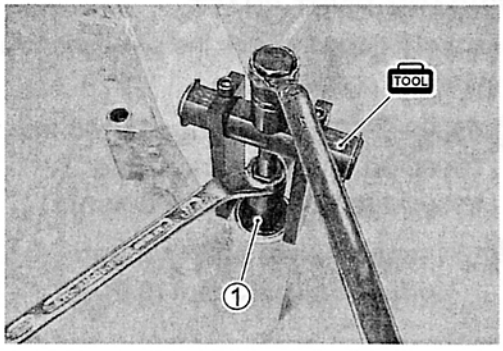

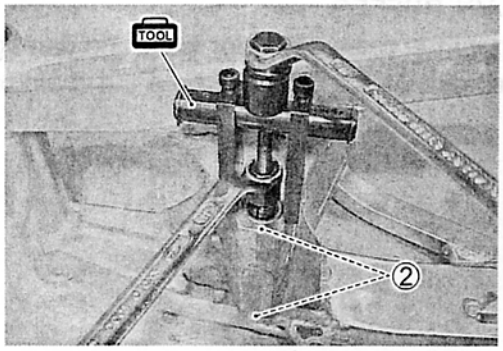

CUSHION LEVER BEARING

Insert the spacer into bearing and check the play when moving the spacer up and down.
If excessive play is noted, replace the bearing with a new one.

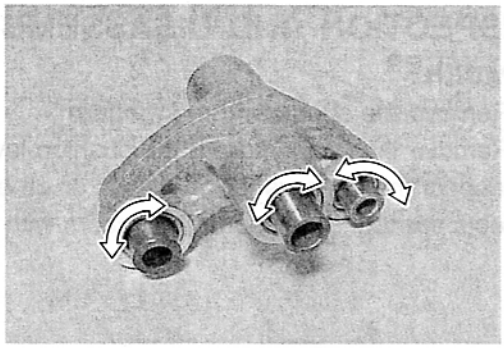

- Draw out the cushion lever bearings with the special tool.

TOOL 09921-20240: Bearing remover set

⚠ CAUTION

The removed bearings must be replaced with new ones.

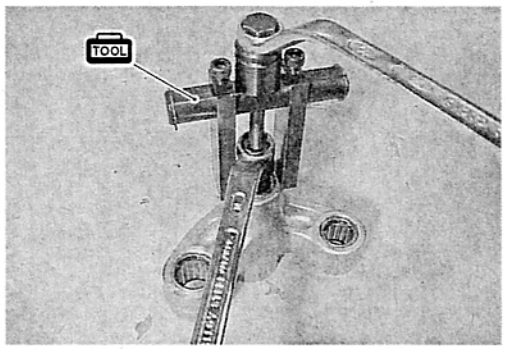

CUSHION LEVER AND CUSHION LEVER RODS

Inspect the cushion lever and cushion lever rods for damage.

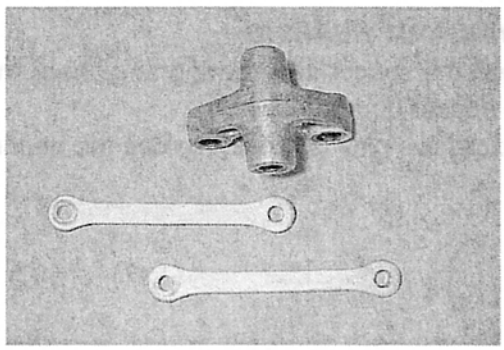

SWINGARM PIVOT SHAFT

Using a dial gauge, check the pivot shaft runout and replace it if the runout exceeds the limit.

TOOL 09900-20607: Dial gauge (1/100 mm, 10 mm)
09900-20701: Magnetic stand
09900-21304: V-block (100 mm)

DATA Swingarm pivot shaft runout:
Service limit: 0.3 mm (0.01 in)

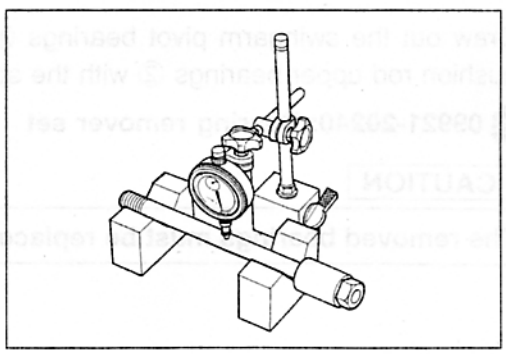

CHAIN BUFFER

Inspect the chain buffer for wear and damage.
If any defects are found, replace the chain buffer with a new one.

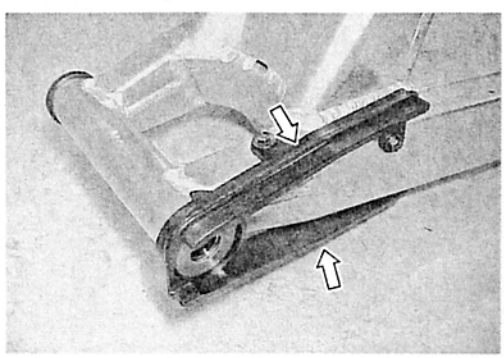

REASSEMBLY

Reassemble the swingarm in the reverse order of disassembly and removal.
Pay attention to the following points:

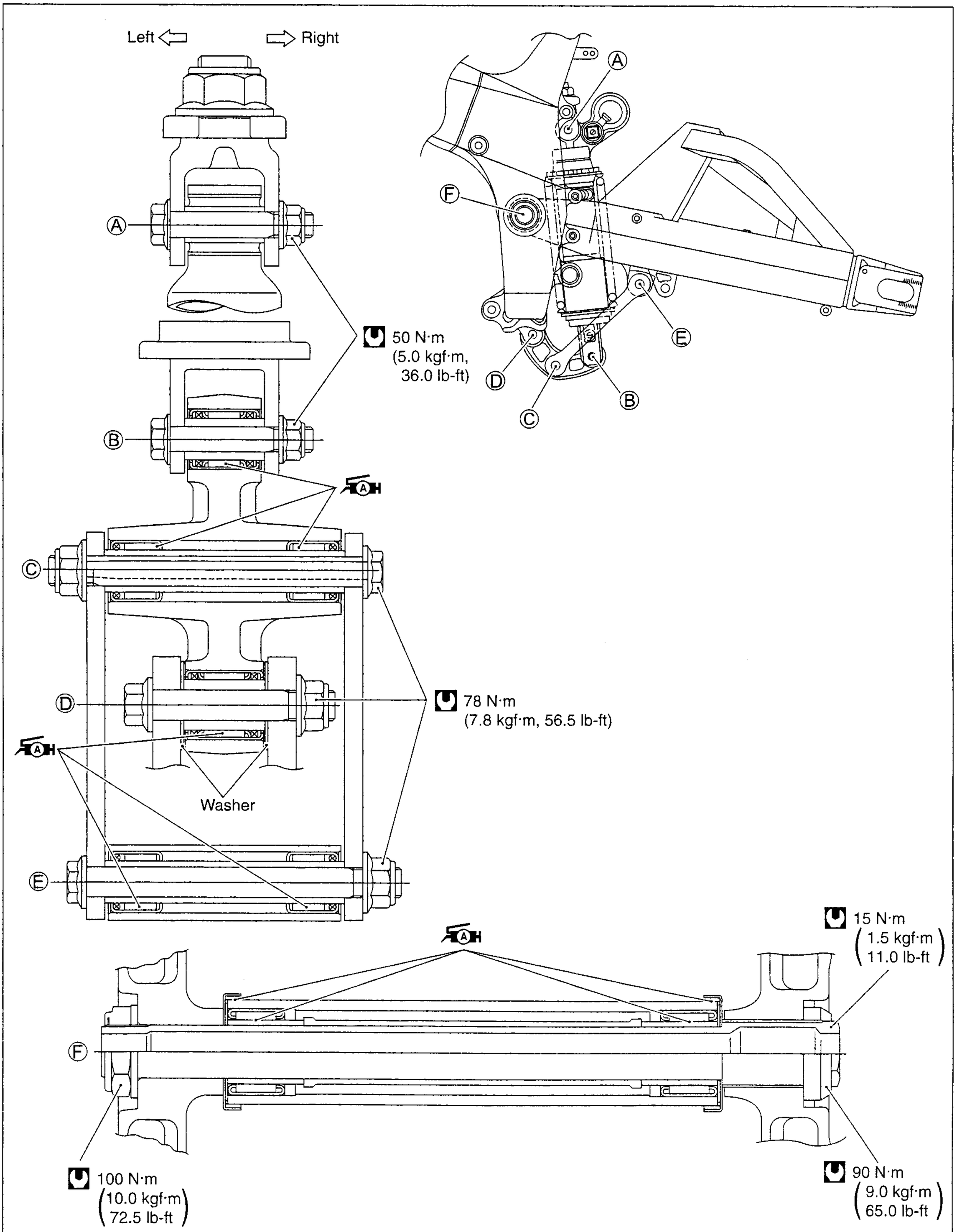

SWINGARM BEARING

- Press the bearing into the swingarm pivot by using the special tool.

TOOL 09941-34513: Steering race installer

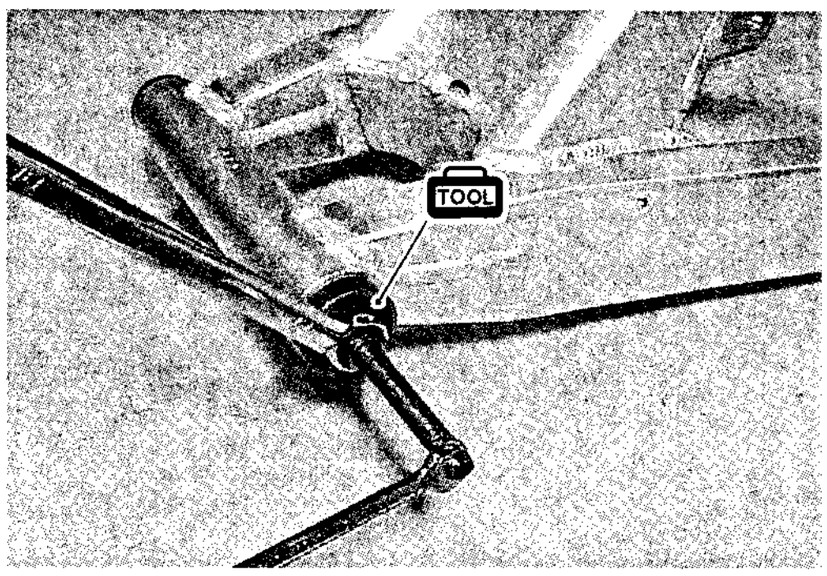

- Press the swingarm cushion rod upper side bearing with the special tool.

TOOL 09941-34513: Steering race installer

NOTE:

When reinstalling the bearing, stamped mark on bearing must face outside.

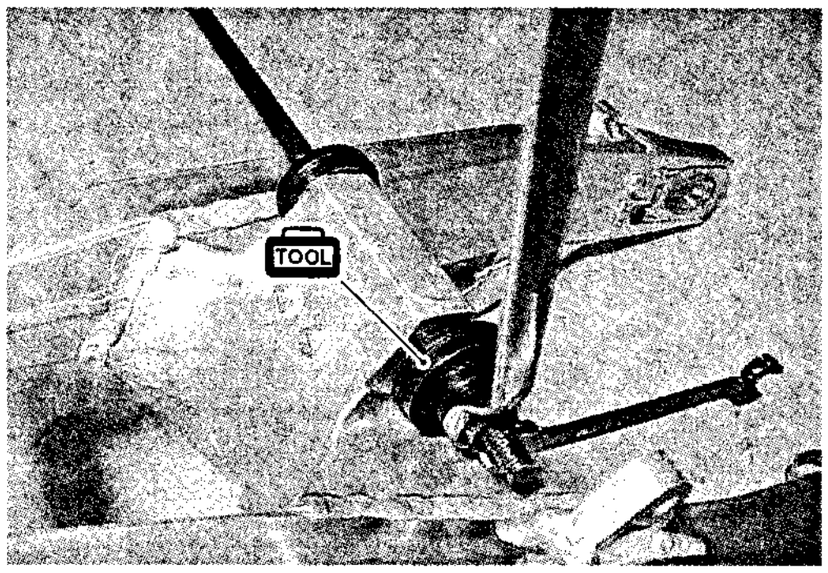

CUSHION LEVER BEARING

- Press the bearings into the cushion lever with the special tool.

TOOL 09941-34513: Steering race installer

NOTE:

When installing the bearing, stamped mark on bearing must face outside.

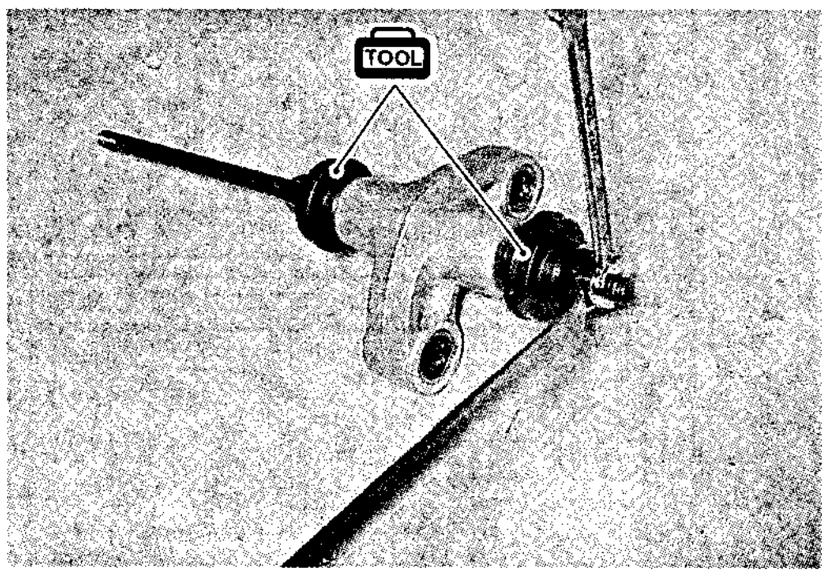

- Apply grease to the bearings, spacers, washers and dust seals.

A H 99000-25030: SUZUKI SUPER GREASE "A" (For USA)
99000-25010: SUZUKI SUPER GREASE "A"
(For the other countries)

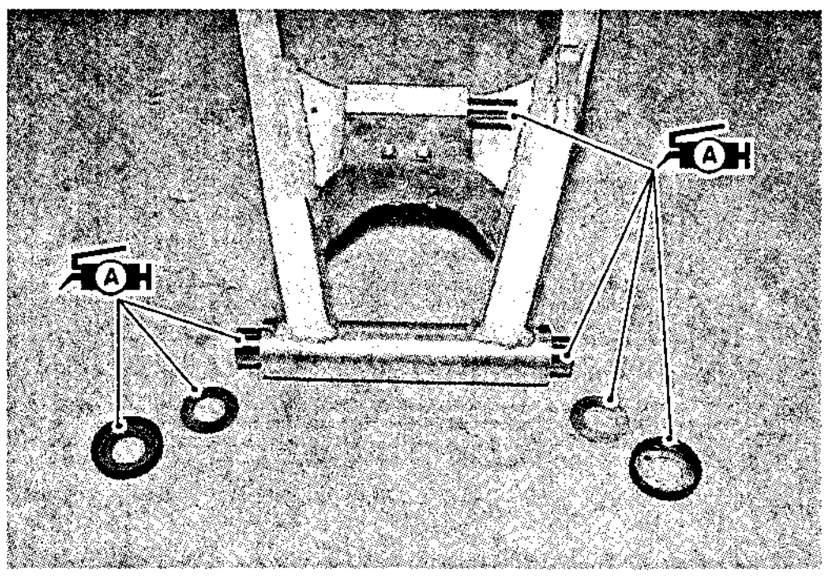

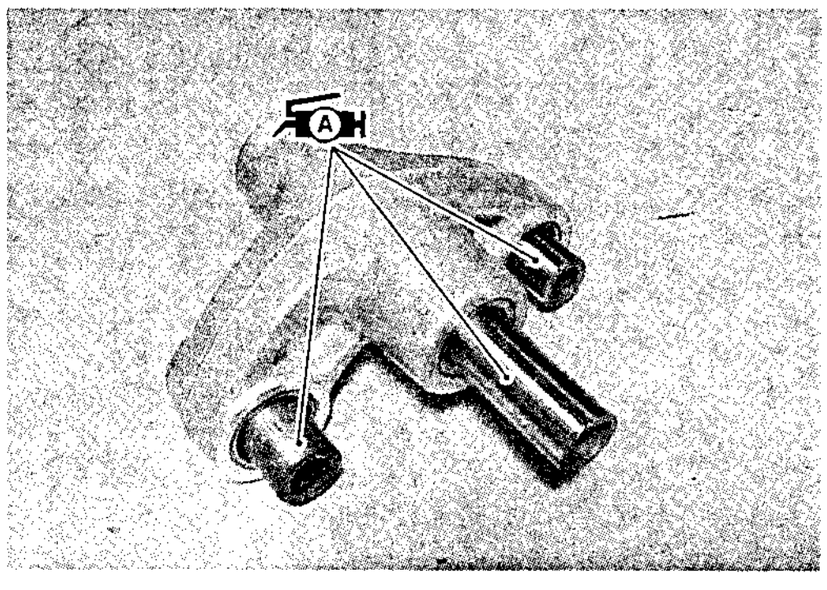

- Assemble the cushion rod onto the swingarm temporarily.
- Install the torque link temporarily.

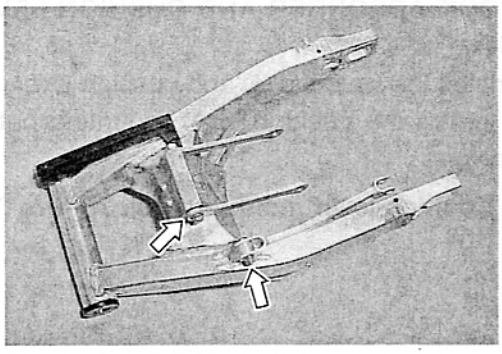

- Remount the chain case ① and chain buffer ②.

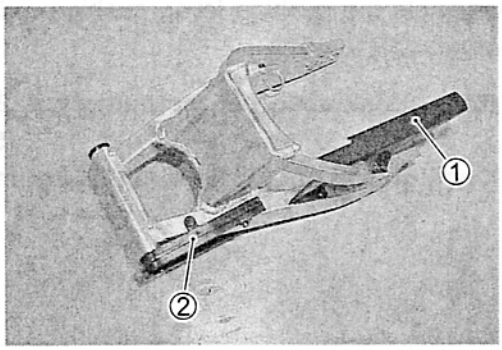

REMOUNTING

Remount the swingarm in the reverse order of disassembly and removal, and pay attention to the following points.

SWINGARM PIVOT THRUST CLEARANCE ADJUSTMENT

Adjust swingarm pivot thrust clearance as following procedure.

- Insert the swingarm pivot shaft and tighten it to the specified torque.

Swingarm pivot shaft: 15 N·m (1.5 kgf·m, 11.0 lb-ft)

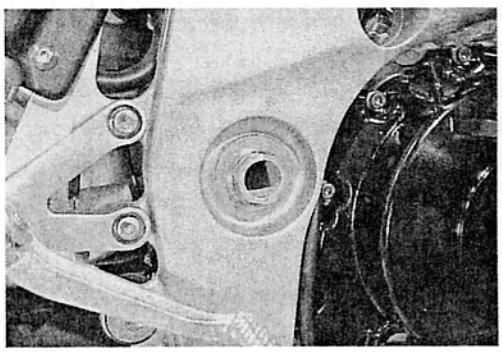

- Hold the swingarm pivot shaft ① and tighten the swingarm pivot nut ② to the specified torque.

Swingarm pivot nut: 100 N·m (10.0 kgf·m, 72.5 lb-ft)

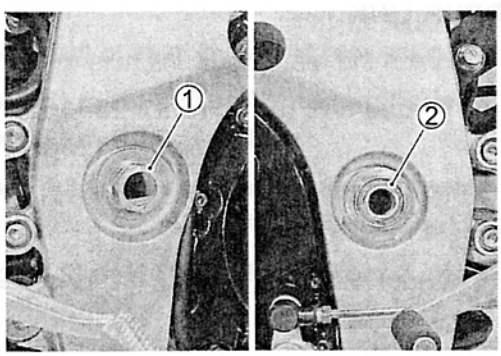

- Tighten the swingarm pivot lock nut to the specified torque with the special tool.

TOOL 09940-14940: Swingarm pivot thrust adjuster socket wrench

Swingarm pivot lock nut: 90 N·m (9.0 kgf·m, 65.0 lb-ft)

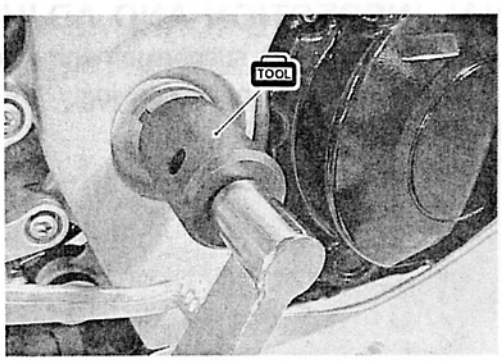

SHOCK ABSORBER AND CUSHION LEVER MOUNTING NUT

- Install the washers Ⓐ and cushion lever. (☞6-49)
- Tighten the cushion lever mounting nut ① to the specified torque.

Cushion lever mounting nut: 78 N·m (7.8 kgf·m, 56.5 lb-ft)

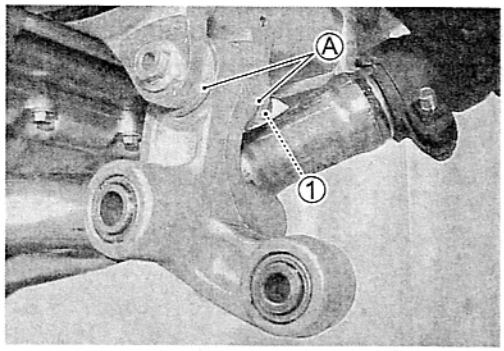

- Assemble the cushion lever, cushion rod and rear shock absorber. (☞6-49)

Rear shock absorber mounting nut ②: 50 N·m (5.0 kgf·m, 36.0 lb-ft)
Cushion rod nut ③: 78 N·m (7.8 kgf·m, 56.5 lb-ft)

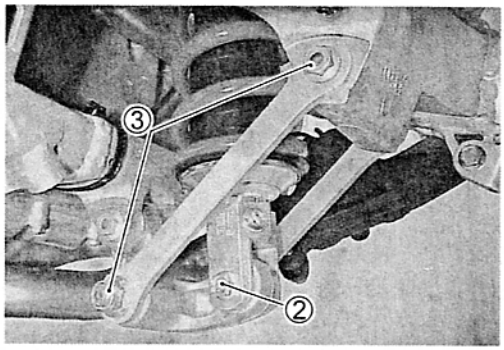

- Route the brake hose and install the brake hose guides. (☞8-21)
- Remount the rear wheel. (☞6-36)
- Remount the side-stand. (☞8-26)
- Connect the drive chain. (☞6-70)

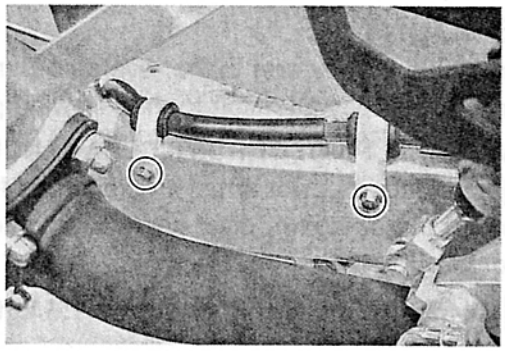

TORQUE LINK

- Tighten the rear torque link nuts to the specified torque.

Torque link nut (Front): 28 N·m (2.8 kgf·m, 20.5 lb-ft)
(Rear) : 34 N·m (3.4 kgf·m, 24.5 lb-ft)

- Tighten the brake hose union bolt to the specified torque. (Brake fluid replacement: ☞ 6-54)

Brake hose union bolt: 23 N·m (2.3 kgf·m, 16.5 lb-ft)

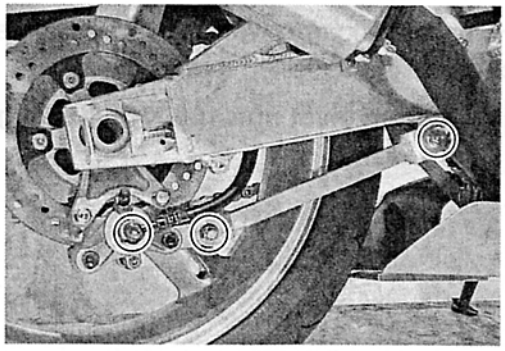

FINAL INSPECTION AND ADJUSTMENT

After installing the rear suspension and wheel, the following adjustments are required before driving.

* Drive chain (☞2-19)
* Tire pressure (☞2-24)

FRONT BRAKE

CONSTRUCTION

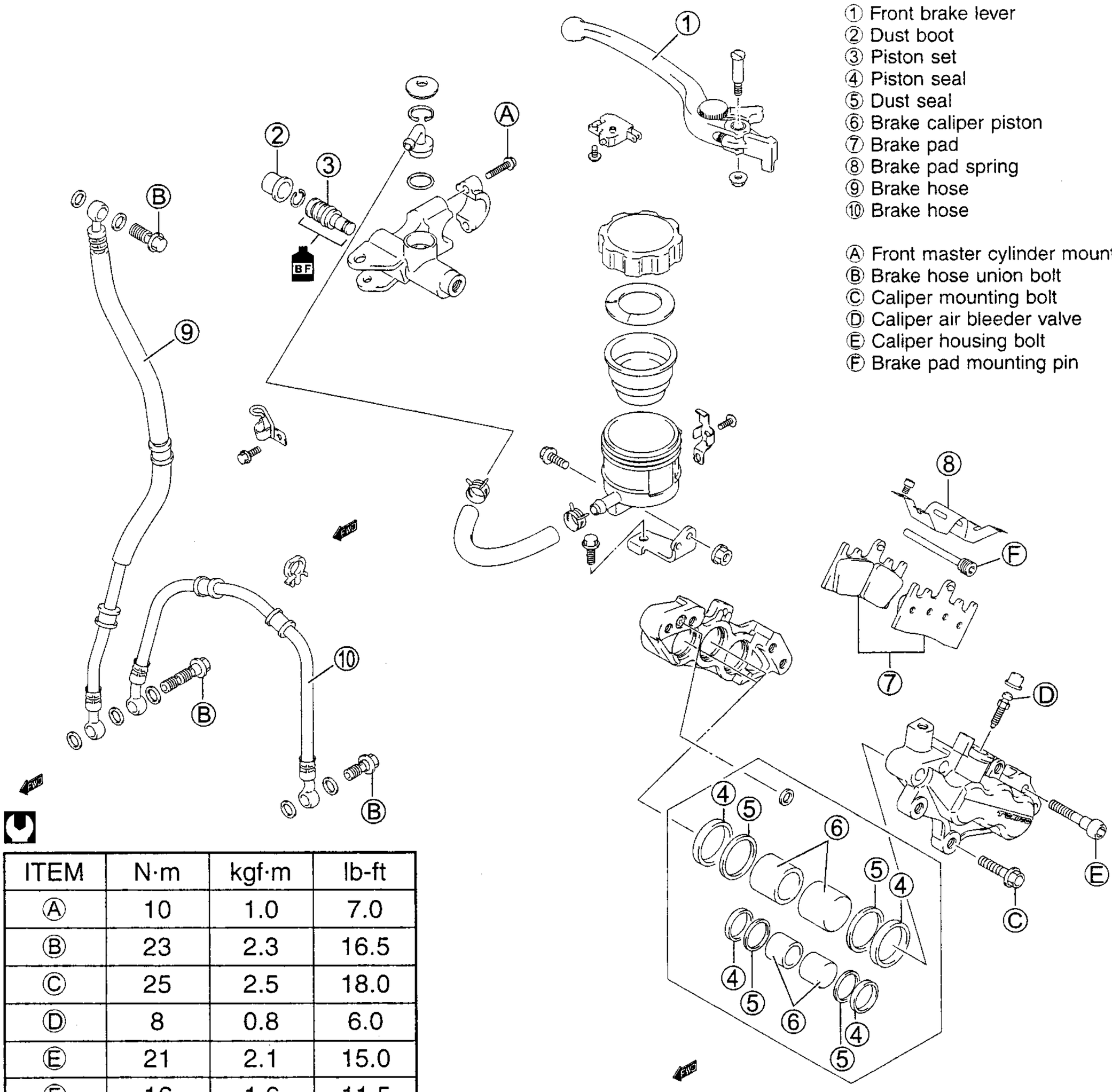

ITEM	N·m	kgf·m	lb-ft
Ⓐ	10	1.0	7.0
Ⓑ	23	2.3	16.5
Ⓒ	25	2.5	18.0
Ⓓ	8	0.8	6.0
Ⓔ	21	2.1	15.0
Ⓕ	16	1.6	11.5

⚠ WARNING

- * This brake system is filled with an ethylene glycol-based DOT 4 brake fluid. Do not use mix different types of fluid such as silicone-based or petroleum-based.
- * Do not use any brake fluid taken from old, used or unsealed containers. Never reuse brake fluid left over from the last servicing or stored for long periods.
- * When storing the brake fluid, seal the container completely and keep away from children.
- * When replenishing brake fluid, take care not to get dust into fluid.
- * When washing brake components, use fresh brake fluid. Never use cleaning solvent.
- * A contaminated brake disc or brake pad reduces braking performance. Discard contaminated pads and clean the disc with high quality brake cleaner or neutral detergent.

⚠ CAUTION

Handle brake fluid with care: the fluid reacts chemically with paint, plastics, rubber materials etc.

BRAKE PAD REPLACEMENT

- Remove the spring ①.
- Remove the brake pads by removing the pad mounting pin ②.

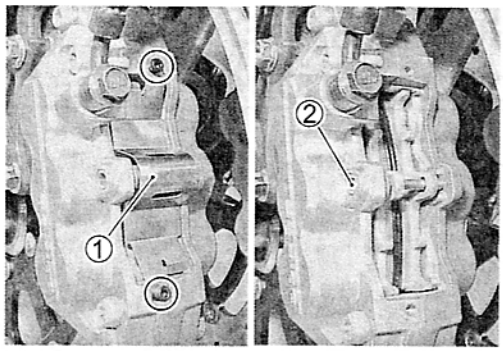

⚠ CAUTION

*** Do not operate the brake lever while dismounting the pads.**
*** Replace the brake pads as a set, otherwise braking performance will be adversely affected.**

- Install the new brake pads.

Pad mounting pin: 16 N·m (1.6 kgf·m, 11.5 lb-ft)

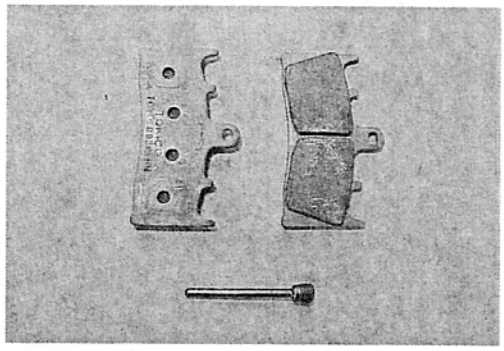

NOTE:
After replacing the brake pads, pump the brake lever few times to check for proper brake operation and then check the brake fluid level.

BRAKE FLUID REPLACEMENT

- Place the motorcycle on a level surface and keep the handlebars straight.
- Remove the brake fluid reservoir cap and diaphragm.
- Drain the old brake fluid as much as possible.
- Fill the reservoir with new brake fluid.

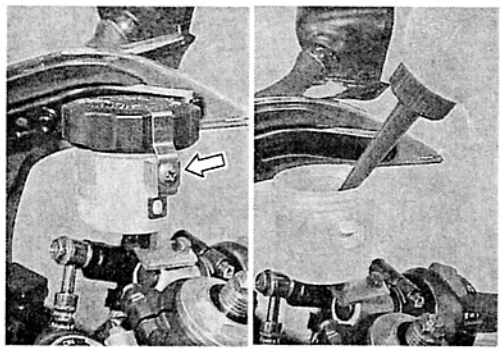

- Connect a clear hose to the caliper air bleeder valve and insert the other end of hose into a receptacle.
- Loosen the air bleeder valve and pump the brake lever until old brake fluid flows out of the bleeder system.
- Close the caliper air bleeder valve and disconnect a clear hose. Fill the reservoir with new fluid to the upper mark of the reservoir.

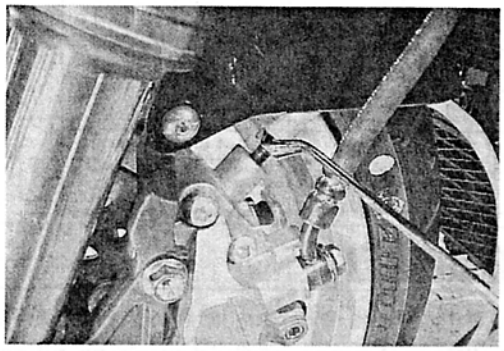

Specification and Classification: DOT 4

⚠ CAUTION

Bleed air from the brake system. (☞2-23)

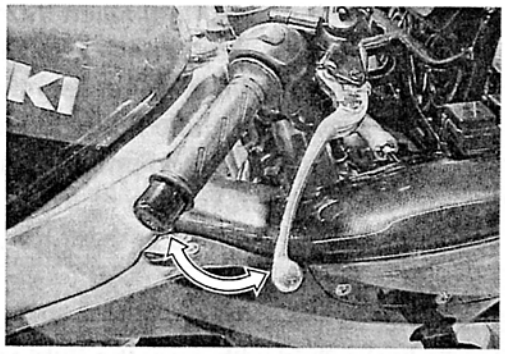

CALIPER REMOVAL AND DISASSEMBLY

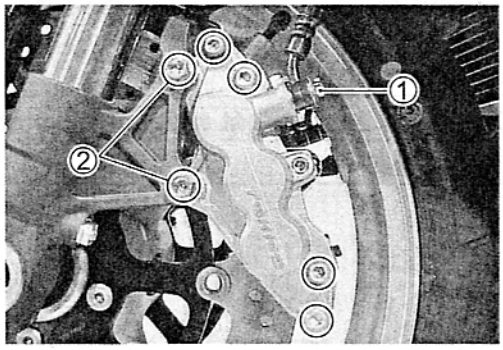

- Remove the brake pads. (☞ 6-54)
- Remove the brake hose from the caliper by removing the union bolt ① and catch the brake fluid in a suitable receptacle.

NOTE:
Place a rag underneath the union bolt on the brake caliper to catch any spilt brake fluid.

- Remove the brake caliper by removing the caliper mounting bolts ②.

NOTE:
Slightly loosen the caliper housing bolts before removing the caliper mounting bolts to facilitate later disassembly.

⚠ CAUTION

Never reuse the brake fluid left over from previous servicing and stored for long periods of time.

⚠ WARNING

Brake fluid, if it leaks, will interfere with safe running and discolor painted surfaces. Check the brake hose and hose joints for cracks and fluid leakage.

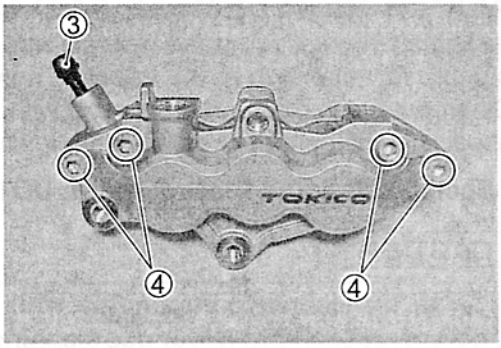

- Remove the caliper air bleeder valve ③.
- Separate the caliper halves by removing the caliper housing bolts ④.

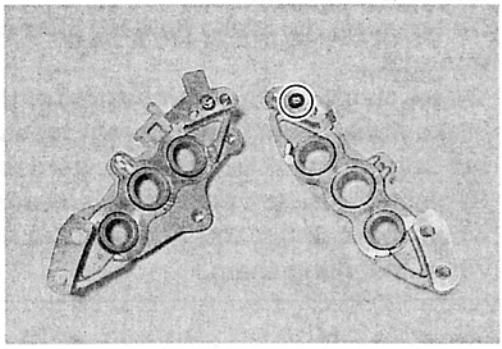

- Remove the O-ring.

⚠ CAUTION

Replace the O-ring with a new one.

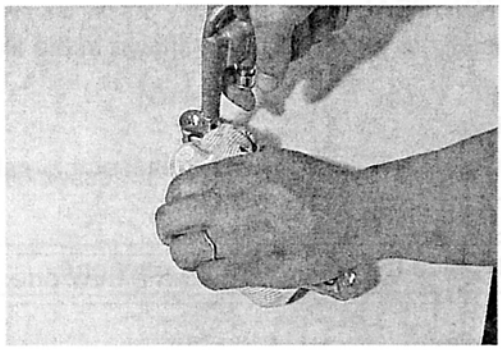

- Place a rag over the pistons to prevent it from popping out and then force out the pistons using compressed air.

⚠ CAUTION

Do not use high pressure air to prevent piston damage.

- Remove the dust seals and piston seals.

⚠ CAUTION

Do not reuse the dust seals and piston seals to prevent fluid leakage.

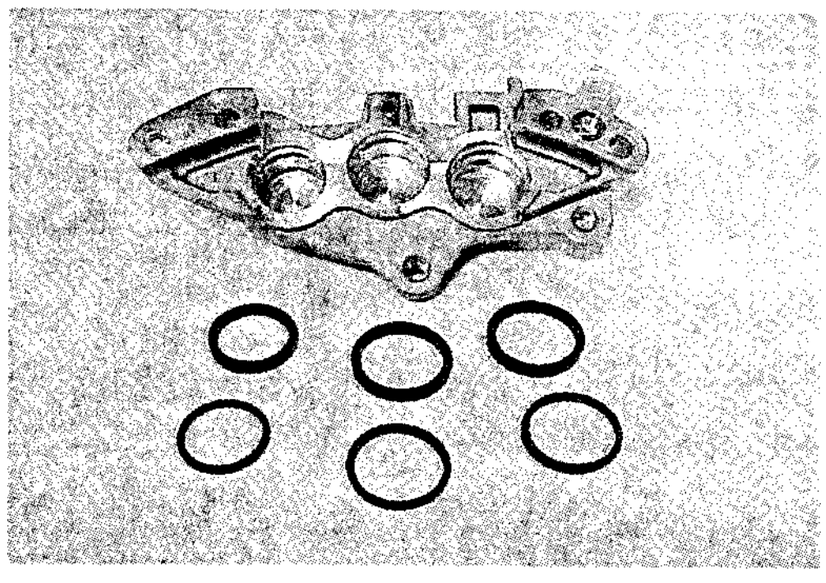

CALIPER INSPECTION

BRAKE CALIPER

Inspect the brake caliper cylinder wall for nicks, scratches or other damage.

BRAKE CALIPER PISTON

Inspect the brake caliper piston surface for any scratches or other damage.

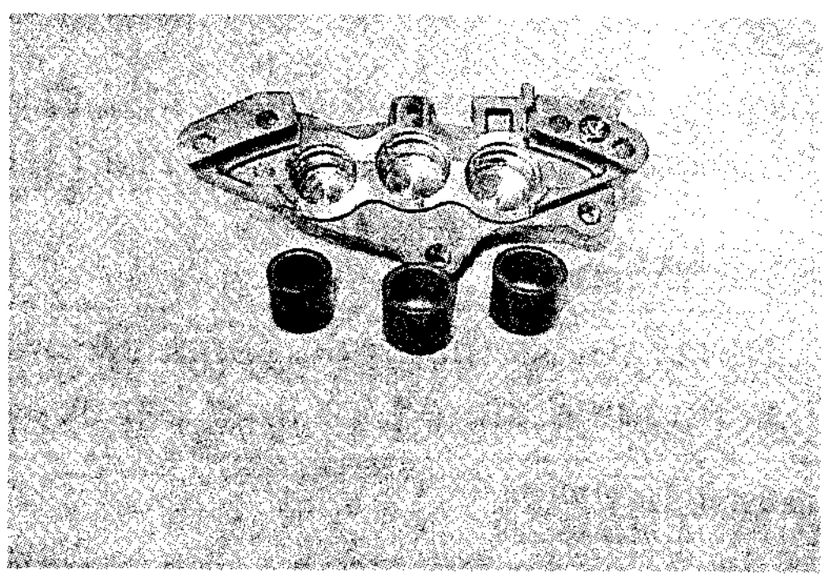

CALIPER REASSEMBLY AND REMOUNTING

Reassemble the caliper in the reverse order of removal and disassembly. Pay attention to the following points:

- Clean the caliper bores and pistons with specified brake fluid, especially the dust seal grooves and piston seal grooves.

BF Specification and Classification: DOT 4

⚠ CAUTION

*** Clean the caliper components with fresh brake fluid before reassembly. Never use cleaning solvent or gasoline to clean them.**
*** Do not wipe the brake fluid off after cleaning the components.**
*** When cleaning the components, use the specified brake fluid. Never use different types of fluid or cleaning solvent such as gasoline, kerosine or the others.**
*** Replace the piston seals and dust seals with new ones when reassembly. Apply the brake fluid to both seals when installing them.**

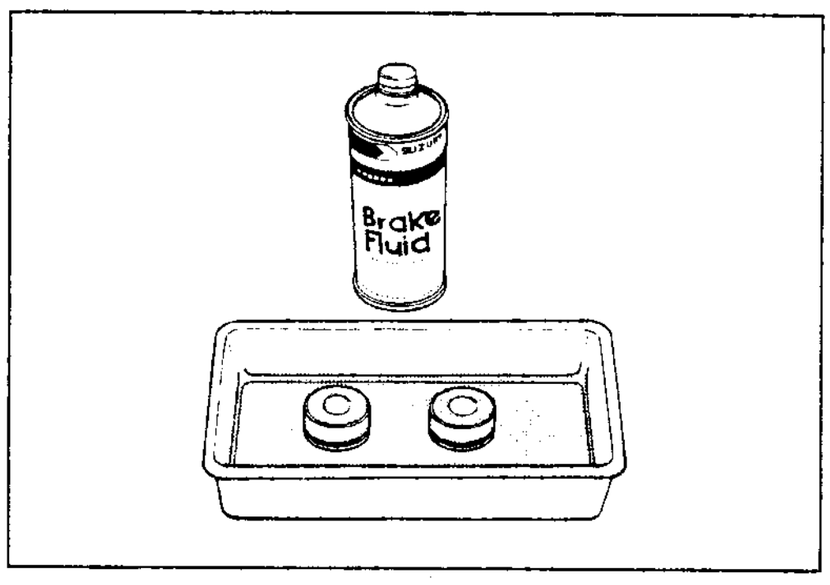

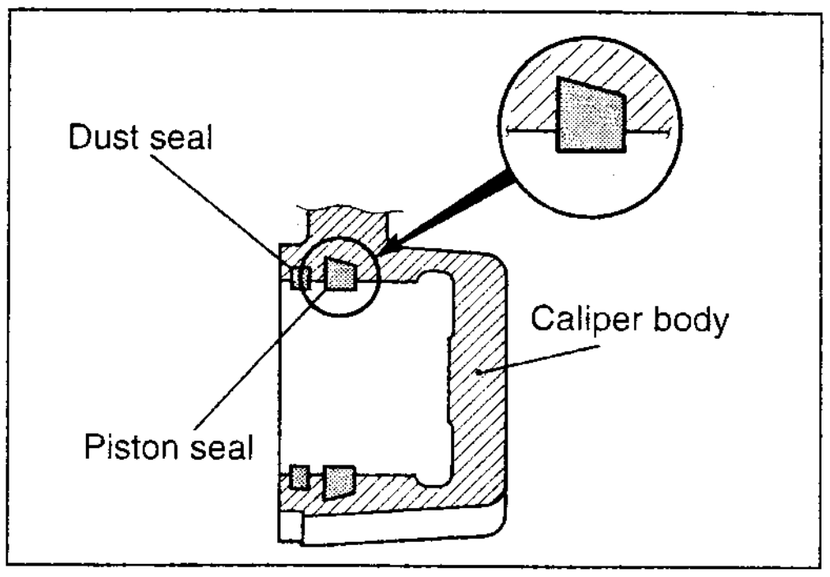

PISTON SEAL

- Install the piston seals as shown in the illustration.

O-ring

- Install the new O-ring and reassemble caliper halves.

⚠ CAUTION

Replace the O-ring with a new one.

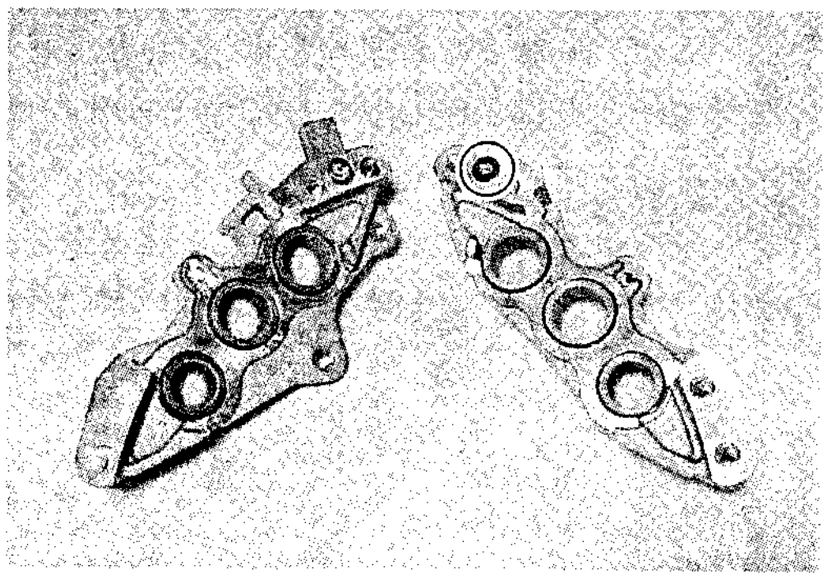

- Tighten each bolt to the specified torque.

Front brake caliper housing bolt ①:
21 N·m (2.1 kgf·m, 15.0 lb-ft)
Front brake caliper mounting bolt ②:
25 N·m (2.5 kgf·m, 18.0 lb-ft)
Front brake hose union bolt ③:
23 N·m (2.3 kgf·m, 16.5 lb-ft)

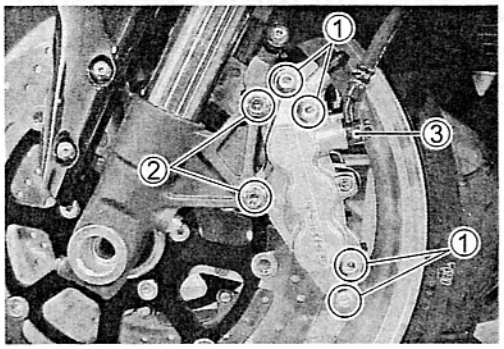

⚠ CAUTION

Bleed air from the system after reassembling the caliper. (☞ 2-23)

BRAKE DISC INSPECTION

Visually check the brake disc for damage or cracks.
Measure the thickness with a micrometer.
Replace the disc if the thickness is less than the service limit or if damage is found.

DATA Front disc thickness: Service Limit: 4.5 mm (0.177 in)

TOOL 09900-20205: Micrometer (0–25 mm)

- Remove the brake calipers. (☞6-55)

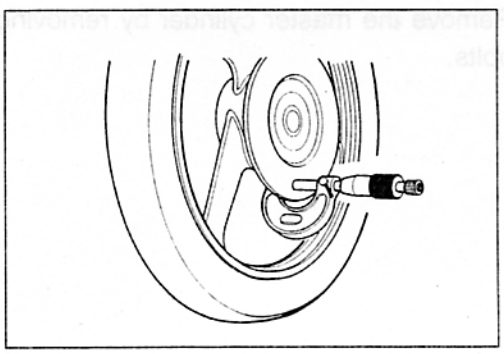

Measure the runout with a dial gauge.
Replace the disc if the runout exceeds the service limit.

DATA Front disc runout: Service Limit: 0.30 mm (0.012 in)

TOOL 09900-20607: Dial gauge (1/100 mm)
09900-20701: Magnetic stand

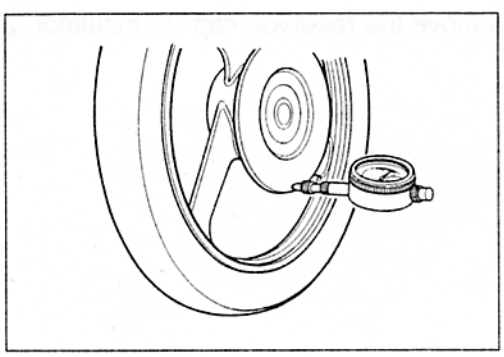

*** Brake disc removal (☞ 6-8)**

*** Brake disc installation (☞ 6-11)**

MASTER CYLINDER REMOVAL AND DISASSEMBLY

- Disconnect the front brake light switch lead wires.

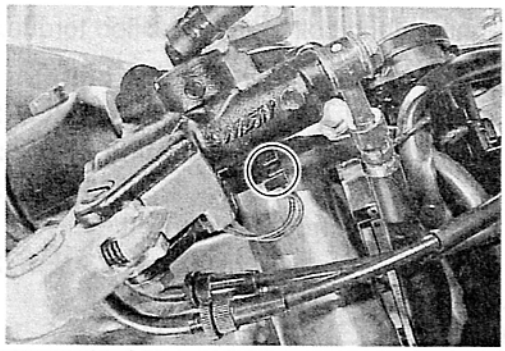

- Place a rag underneath the union bolt on the master cylinder to catch any spilt brake fluid. Remove the union bolt and disconnect the brake hose.

⚠ CAUTION

Immediately and completely wipe off any brake fluid contacting any part of the motorcycle. The fluid reacts chemically with paint, plastics and rubber materials, etc. and will damage them severely.

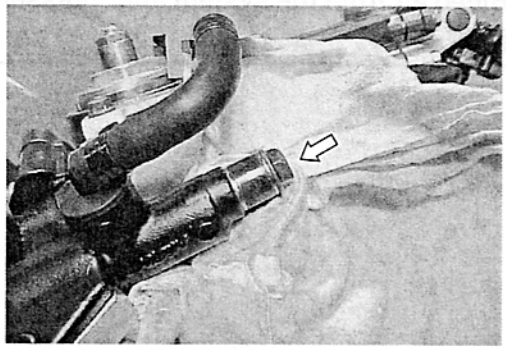

- Remove the master cylinder by removing the master cylinder bolts.

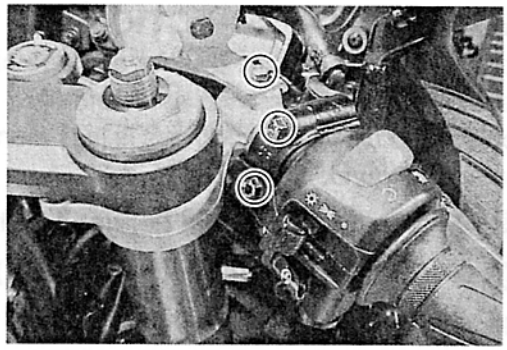

- Remove the reservoir cap ①, insulator ② and diaphragm ③.

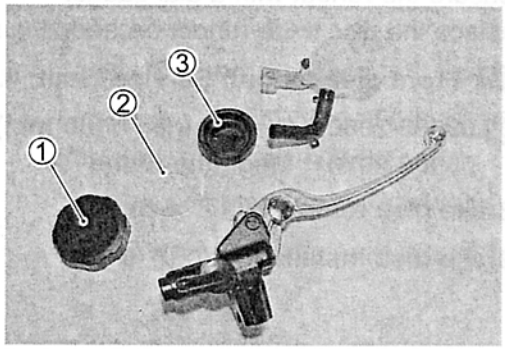

- Remove the brake lever ④ and brake switch ⑤.

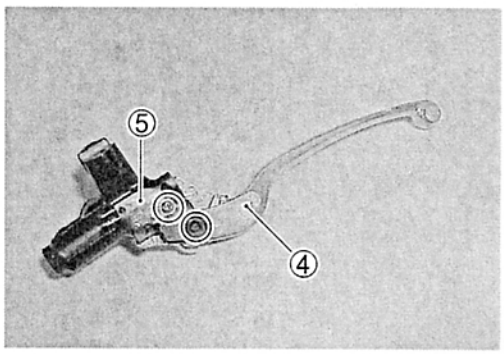

- Pull out the dust boot ① and remove the circlip ②.

TOOL 09900-06108: Snap ring pliers.

- Remove the piston/secondary cup, primary cup and return spring.
  ③ Secondary cup
  ④ Piston
  ⑤ Primary cup
  ⑥ Return spring
- Remove the circlip ⑦, connector ⑧ and O-ring ⑨.

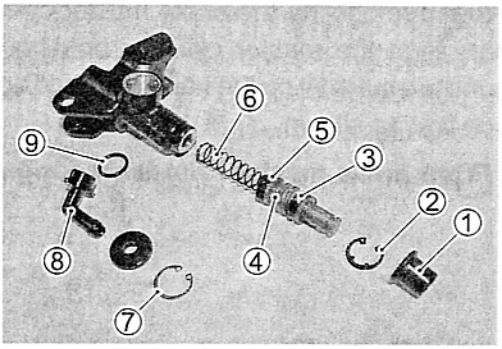

MASTER CYLINDER INSPECTION

Inspect the master cylinder bore for any scratches or other damage.
Inspect the piston surface for any scratches or other damage.
Inspect the primary cup, secondary cup and dust seal for wear or damage.

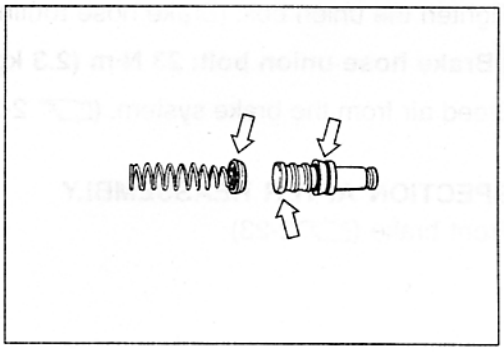

MASTER CYLINDER REASSEMBLY AND REMOUNTING

Reassemble the master cylinder in the reverse order of removal and disassembly. Pay attention to the following points:

⚠ CAUTION

*** Clean the master cylinder components with fresh brake fluid before reassembly. Never use cleaning solvent or gasoline to clean them.**
*** Do not wipe the components with a rag.**
*** Apply brake fluid to the cylinder bore and all the component to be inserted into the bore.**

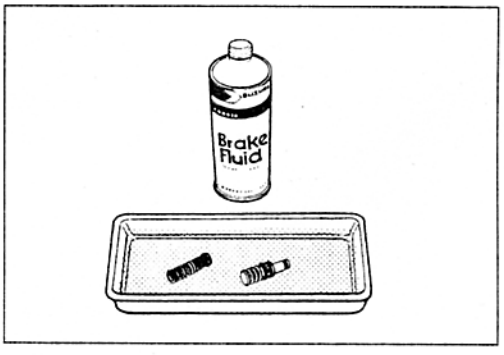

BF Specification and Classification: DOT 4

- When remounting the brake master cylinder onto the handlebar, align the master cylinder holder's mating surface with punched mark Ⓐ on the handlebar and tighten the upper clamp bolt first as shown.

Front brake master cylinder mounting bolt: 10 N·m (1.0 kgf·m, 7.0 lb-ft)

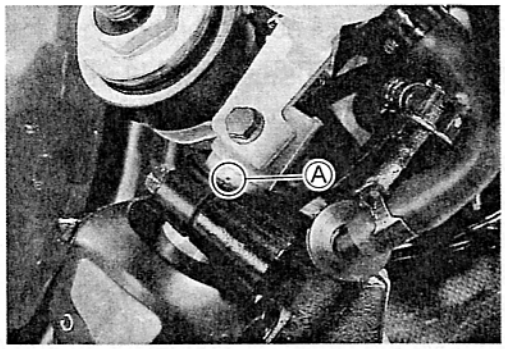

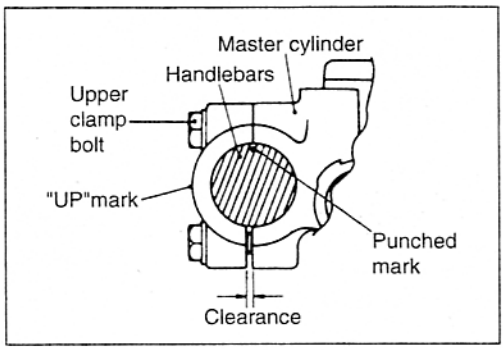

- Tighten the union bolt. (Brake hose routing: ☞ 8-20)

Brake hose union bolt: 23 N·m (2.3 kgf·m, 16.5 lb-ft)

- Bleed air from the brake system. (☞ 2-23)

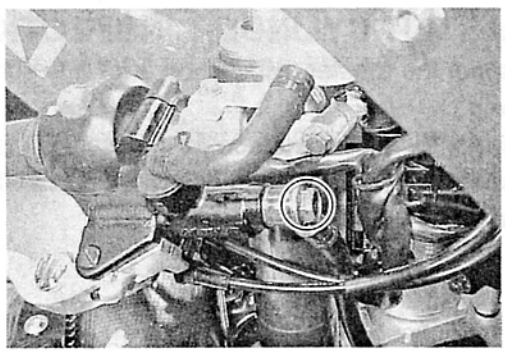

INSPECTION AFTER REASSEMBLY

- Front brake (☞ 2-23)

REAR BRAKE

CONSTRUCTION

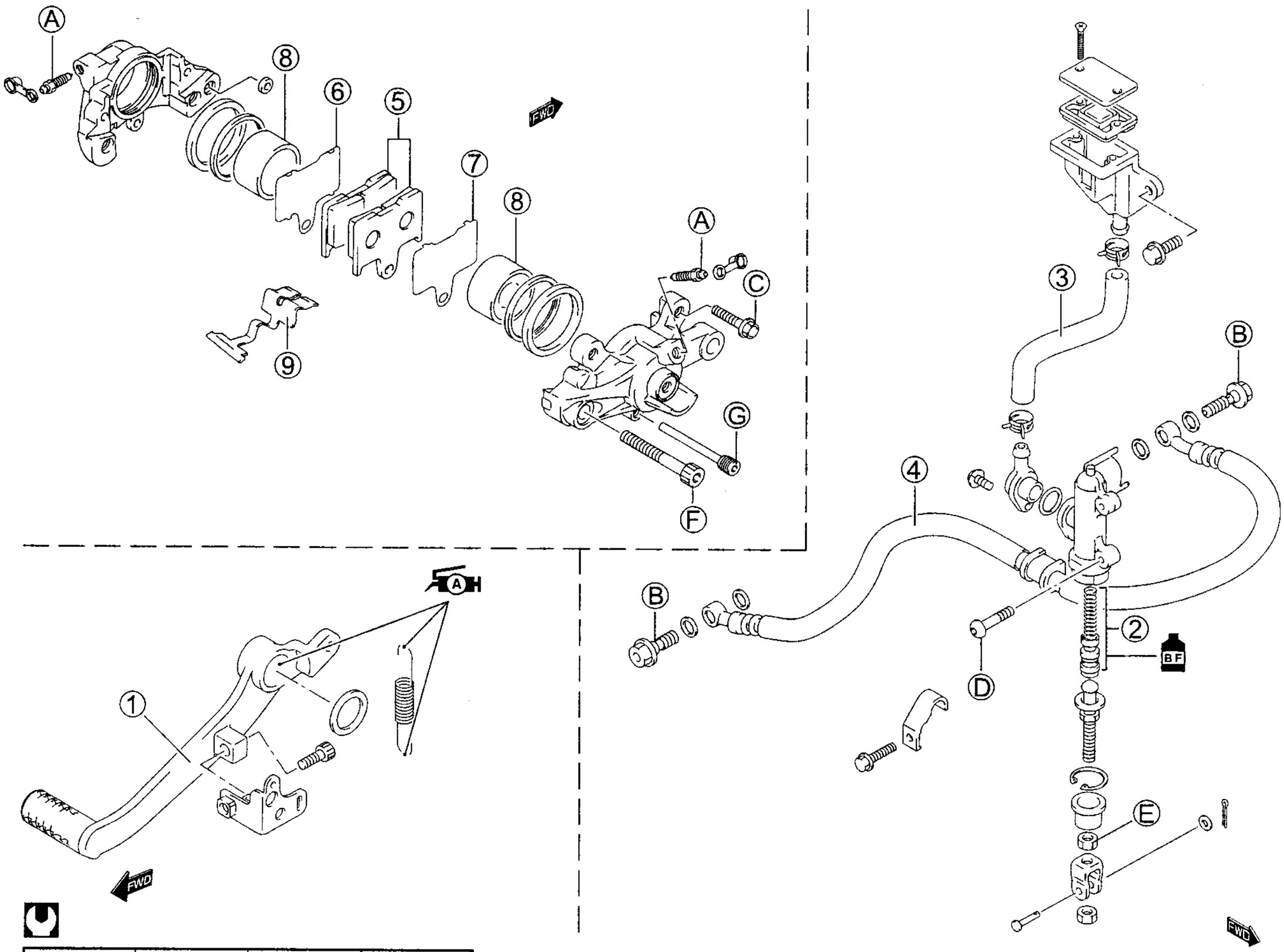

ITEM	N·m	kgf·m	lb-ft
Ⓐ	8	0.8	6.0
Ⓑ	23	2.3	16.5
Ⓒ	25	2.5	18.0
Ⓓ	10	1.0	7.0
Ⓔ	18	1.8	13.0
Ⓕ	37	3.7	27.0
Ⓖ	17	1.7	12.5

① Brake pedal
② Piston/cup set
③ Reservoir tank hose
④ Brake hose
⑤ Pad
⑥ Inner shim
⑦ Outer shim
⑧ Piston
⑨ Spring

Ⓐ Caliper air bleeder valve
Ⓑ Brake hose union bolt
Ⓒ Rear brake caliper mounting bolt
Ⓓ Rear brake master cylinder mounting bolt
Ⓔ Rear brake master cylinder rod lock nut
Ⓕ Rear brake caliper housing bolt
Ⓖ Rear brake pad mounting pin

⚠ WARNING

*** This brake system is filled with an ethylene glycol-based DOT 4 brake fluid. Do not use or mix different types of fluid such as silicone-based or petroleum-based.**
*** Do not use any brake fluid taken from old, used or unsealed containers. Never reuse brake fluid left over from the last servicing or stored for long periods.**
*** When storing the brake fluid, seal the container completely and keep away from children.**
*** When replenishing brake fluid, take care not to get dust into fluid.**
*** When cleaning brake components, use fresh brake fluid. Never use cleaning solvent.**
*** A contaminated brake disc or brake pad reduces braking performance. Discard contaminated pads and clean the disc with high quality brake cleaner or neutral detergent.**

⚠ CAUTION

Handle brake fluid with care: the fluid reacts chemically with paint, plastics, rubber materials etc.

BRAKE PAD REPLACEMENT

- Remove the brake pad mounting pin ① and spring ②.

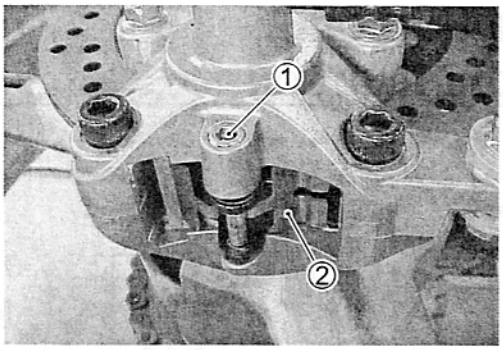

- Remove the brake pads.

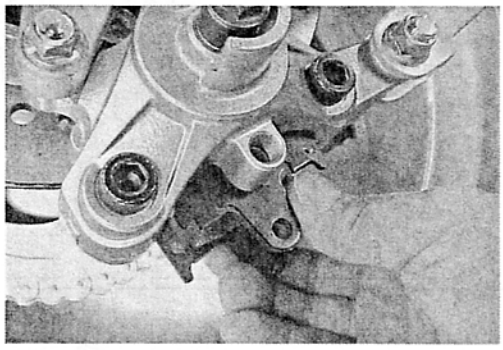

⚠ CAUTION

*** Do not operate the brake pedal while dismounting the pads.**
*** Replace the brake pads as a set, otherwise braking performance will be adversely affected.**

- Install the new brake pads and shims.

Pad mounting pin: 17 N·m (1.7 kgf·m, 12.5 lb-ft)

NOTE:
After replacing the brake pads, pump the brake pedal few times to operate the brake correctly and then check the brake fluid level.

BRAKE FLUID REPLACEMENT

- Remove the brake fluid reservoir cap.
- Replace the brake fluid in the same manner as the front brake. (☞ 6-54)

Specification and Classification: DOT 4

⚠ CAUTION

Bleed air from the brake system. (☞2-24)

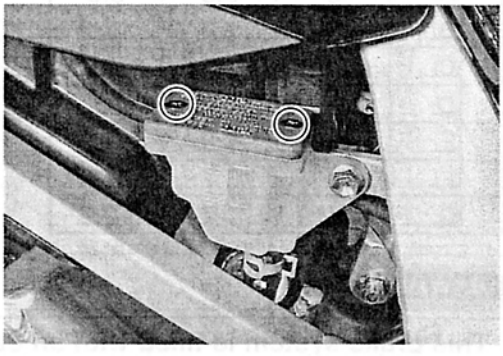

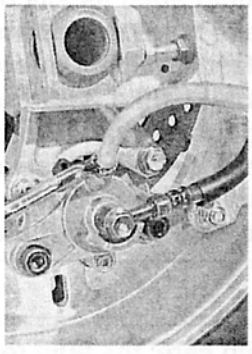

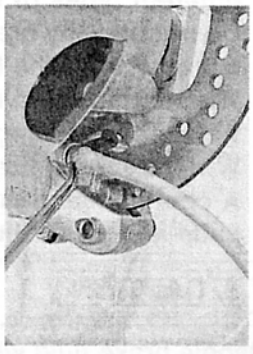

CALIPER REMOVAL AND DISASSEMBLY

- Remove the brake pads. (☞6-62)
- Remove the union bolt ① and catch the brake fluid in a suitable receptacle.

NOTE:
Slightly loosen the caliper housing bolts ② to facilitate later disassembly before removing the caliper mounting bolts.

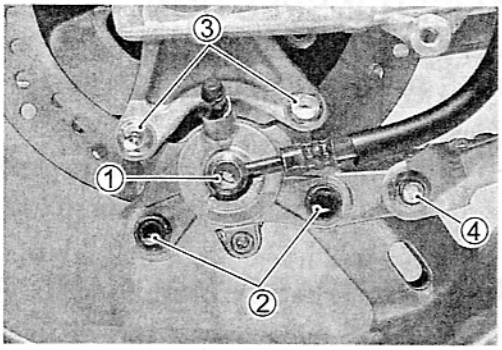

⚠ CAUTION

Never reuse the brake fluid left over from previous servicing and stored for long periods.

⚠ WARNING

Brake fluid, if it leaks, will interfere with safe running and discolor painted surfaces. Check the brake hose and hose joints for cracks and fluid leakage.

- Remove the brake caliper mounting bolts ③ and torque link bolt ④.
- Remove the caliper air bleeder valve ⑤.
- Remove the caliper housing bolts ⑥.
- Separate the caliper halves.
- Remove the O-ring ⑦.

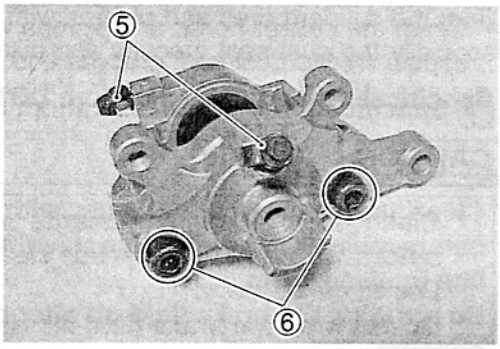

⚠ CAUTION

Replace the O-ring with a new one.

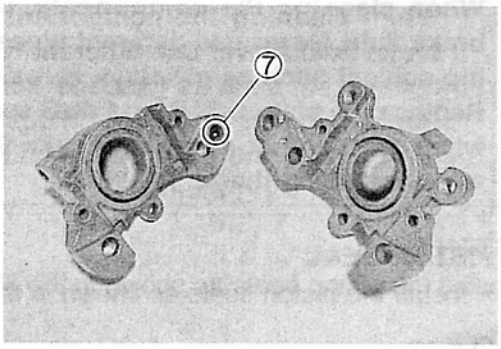

- Place a rag over the piston to prevent it from popping out and then force out the pistons using compressed air.

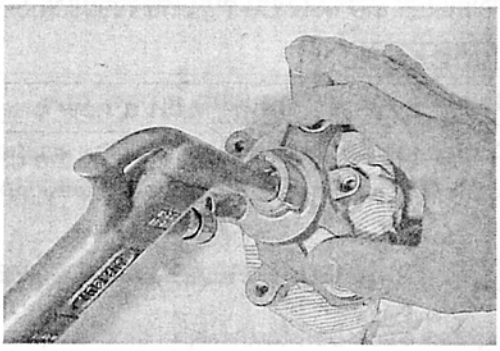

⚠ CAUTION

Do not use high pressure air to prevent piston damage.

- Remove the dust seals and piston seals.

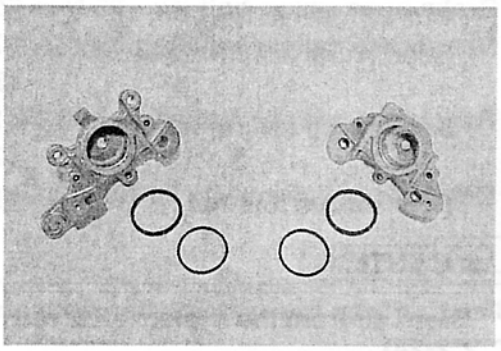

⚠ CAUTION

Do not reuse the dust seals and piston seals to prevent fluid leakage.

CALIPER INSPECTION

CALIPER INSPECTION: ☞ 6-56
BRAKE DISC INSPECTION: ☞ 6-57

DATA **Service Limit**
Rear disc thickness: 4.5 mm (0.177 in)
Rear disc runout: 0.30 mm (0.012 in)

CALIPER REASSEMBLY AND REMOUNTING

Reassemble the caliper in the reverse order of removal and disassembly. Pay attention to the following points:

- Clean the caliper bores and pistons with specified brake fluid, especially the dust seal grooves and piston seal grooves.

BF **Specification and Classification: DOT 4**

⚠ CAUTION

*** Clean the caliper components with fresh brake fluid before reassembly. Never use cleaning solvent or gasoline to clean them.**
*** Do not wipe the brake fluid off after cleaning the components.**
*** When cleaning the components, use the specified brake fluid. Never use different types of fluid or cleaning solvent such as gasoline, kerosine or the others.**
*** Replace the piston seals and dust seals with new ones when reassembly. Apply the brake fluid to both seals when installing them.**

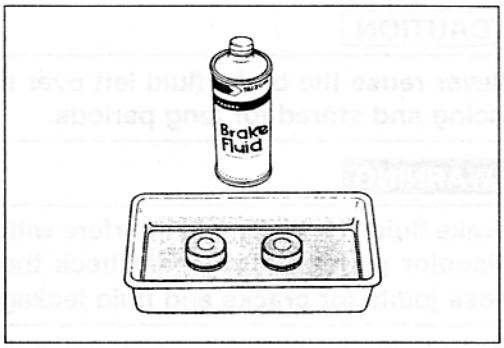

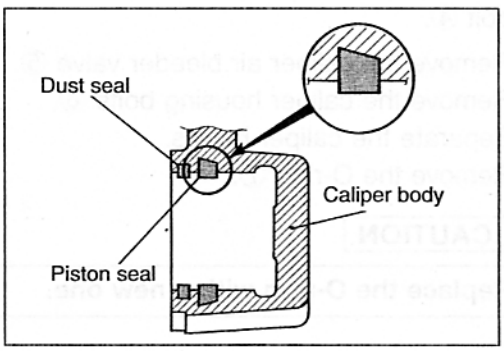

PISTON SEAL

- Install the piston seals as shown in the illustration.

O-ring

- Install the new O-ring and reassemble caliper halves.

⚠ CAUTION

Replace the O-ring with a new one.

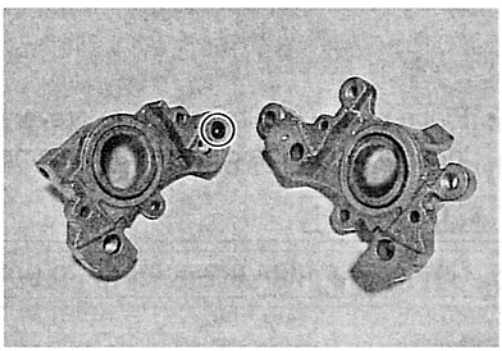

- Completely clean the thread of the caliper housing and bolts.
- Apply THREAD LOCK SUPER "1360" to the caliper housing bolts.

1360 **99000-32130: THREAD LOCK SUPER "1360"**

- Tighten each bolt to the specified torque.

Brake hose union bolt ①: 23 N·m (2.3 kgf·m, 16.5 lb-ft)
Rear brake caliper housing bolt ②: 37 N·m (3.7 kgf·m, 27.0 lb-ft)
Rear brake caliper mounting bolt ③: 25 N·m (2.5 kgf·m, 18.0 lb-ft)
Rear torque link nut ④: 34 N·m (3.4 kgf·m, 24.5 lb-ft)

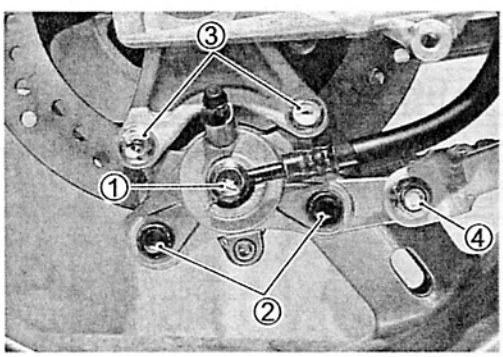

⚠ CAUTION

Bleed air from the system after reassembling the caliper. (☞2-24)

MASTER CYLINDER REMOVAL AND DISASSEMBLY

- Remove the brake fluid reservoir tank mounting bolt ①.

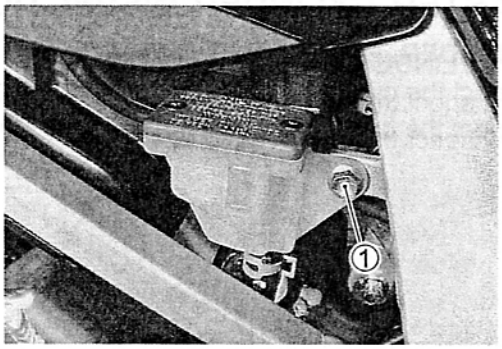

- Place a rag underneath the union bolt on the master cylinder to catch spilled drops of brake fluid. Remove the union bolt ② and disconnect the brake hose.
- Loosen the lock nut ③.
- Remove the mounting bolts ④.

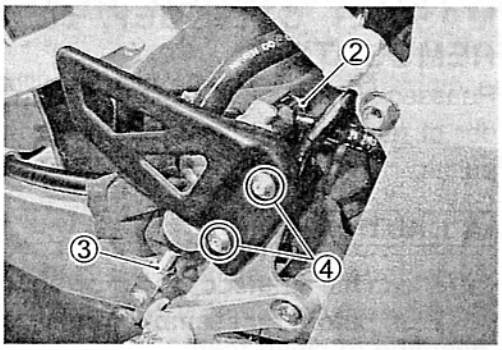

⚠ CAUTION

Immediately and completely wipe off any brake fluid contacting any parts of the motorcycle. The fluid reacts chemically with paint, plastic and rubber materials, etc. and will damage them severely.

- Disconnect the reservior tank hose.
- Remove the master cylinder by turning the master cylinder rod ⑤.

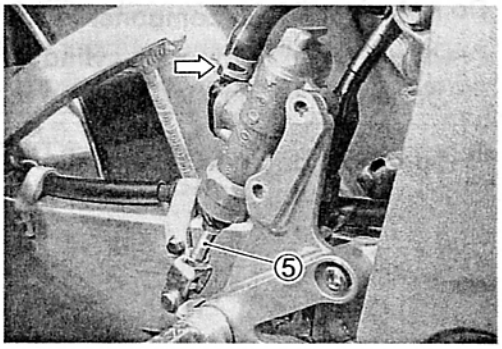

- Remove the reservoir cap ⑥ and diaphragm ⑦.
- Remove the connector ⑧ by removing the screw.
- Remove the O-ring ⑨.

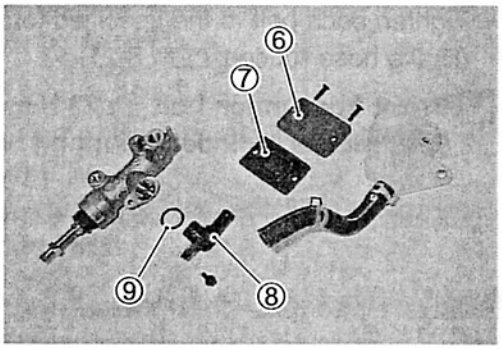

⚠ CAUTION

Replace the O-ring with a new one.

- Pull out the dust seal ⑩ then remove the circlip ⑪ with the special tool.

TOOL 09900-06108: Snap ring pliers

- Remove the push rod ⑫, piston/primary cup ⑬ and spring ⑭.

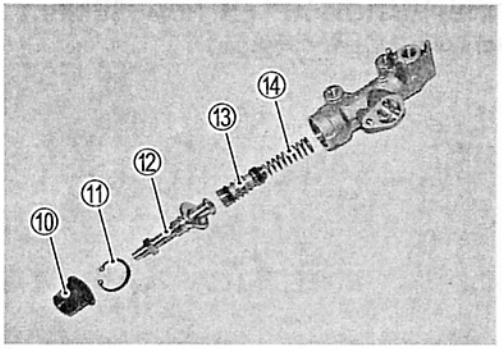

MASTER CYLINDER INSPECTION

CYLINDER, PISTON AND CUP SET

Inspect the cylinder bore wall for any scratches or other damage.
Inspect the cup set and each rubber part for damage.

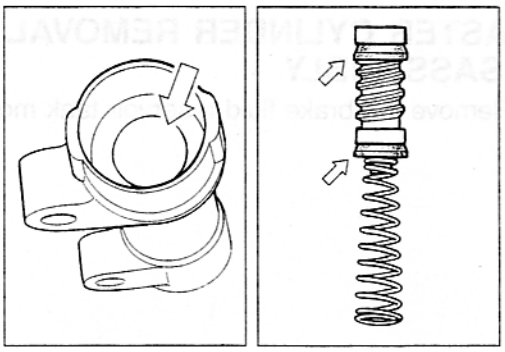

MASTER CYLINDER REASSEMBLY AND REMOUNTING

Reassemble and remount the master cylinder in the reverse order of removal and disassembly. Pay attention to the following points:

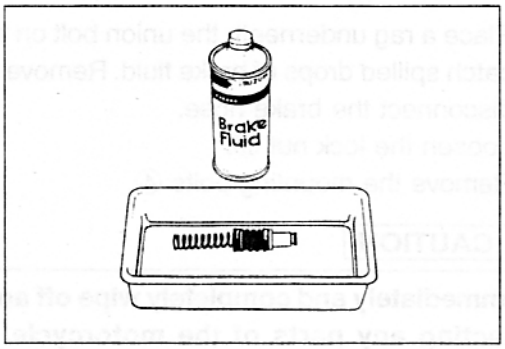

⚠ CAUTION

- *** Clean the master cylinder components with fresh brake fluid before reassembly. Never use cleaning solvent or gasoline to clean them.**
- *** Do not wipe the components with a rag.**
- *** Apply brake fluid to the cylinder bore and all the component to be inserted into the bore.**

Specification and Classification: DOT 4

- Tighten each bolt to the specified torque.
  (Brake hose routing: ☞ 8-21)

Brake hose union bolt ①: 23 N·m (2.3 kgf·m, 16.5 lb-ft)
Rear master cylinder mounting bolt ②:
10 N·m (1.0 kgf·m, 7.0 lb-ft)
Rear master cylinder rod lock nut ③:
18 N·m (1.8 kgf·m, 13.0 lb-ft)

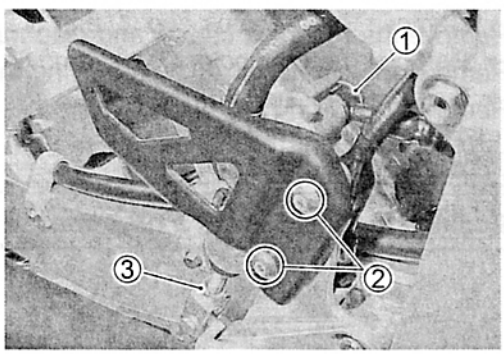

- Bleed air from the brake system. (☞ 2-24)

INSPECTION AFTER REASSEMBLY

Rear brake: (☞2-24)

TIRE AND WHEEL

TIRE REMOVAL

The most critical factor of a tubeless tire is the seal between the wheel rim and the tire bead. For this reason, it is recommended to use a tire changer that can satisfy this sealing requirement and can make the operation efficient as well as functional.
For operating procedures, refer to the instructions supplied by the tire changer manufacturer.

NOTE:
When removing the tire in the case of repair or inspection, mark the tire with a chalk to indicate the tire position relative to the valve position.
Even though the tire is refitted to the original position after repairing puncture, the tire may have to be balanced again since such a repair can cause imbalance.

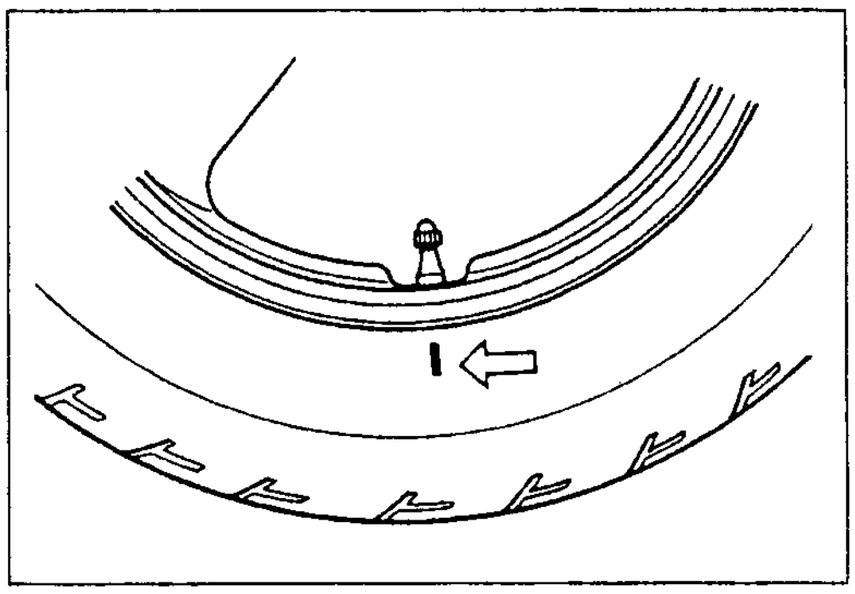

INSPECTION

WHEEL INSPECTION

Wipe the wheel clean and check for the following:
- Distortion and crack
- Nick or scratch on bead
- Wheel rim runout (☞ 6-9)

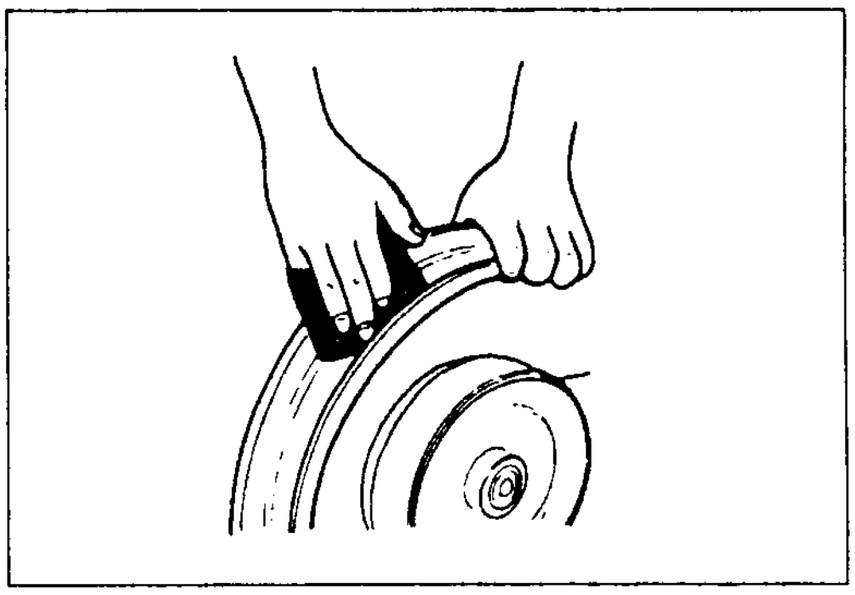

TIRE INSPECTION

Tire must be checked for the following points:
- Nick and rupture on side wall
- Thread remaining depth (☞ 2-24)
- Separation of cord
- Abnormal, uneven wear on tread
- Surface damage on bead
- Localized tread wear due to skidding (Flat spot)
- Abnormal condition of inner liner

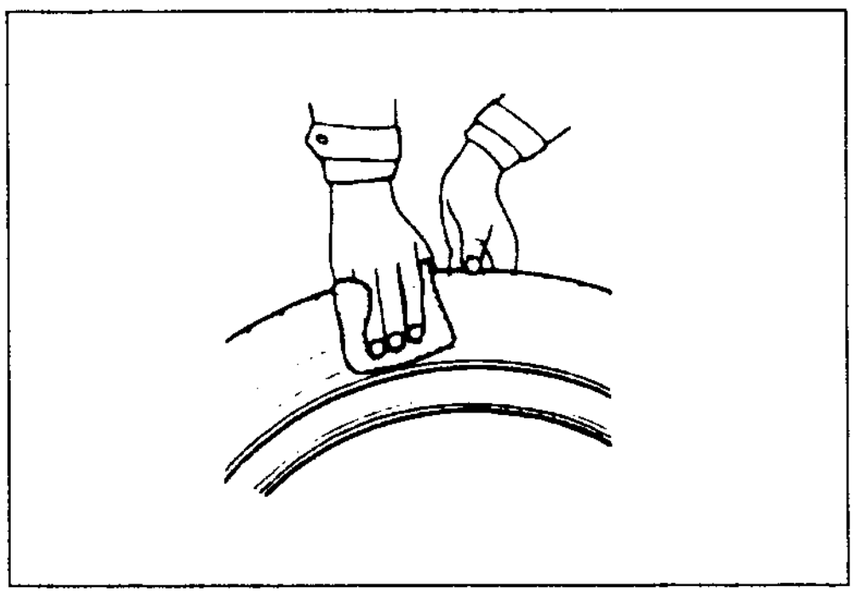

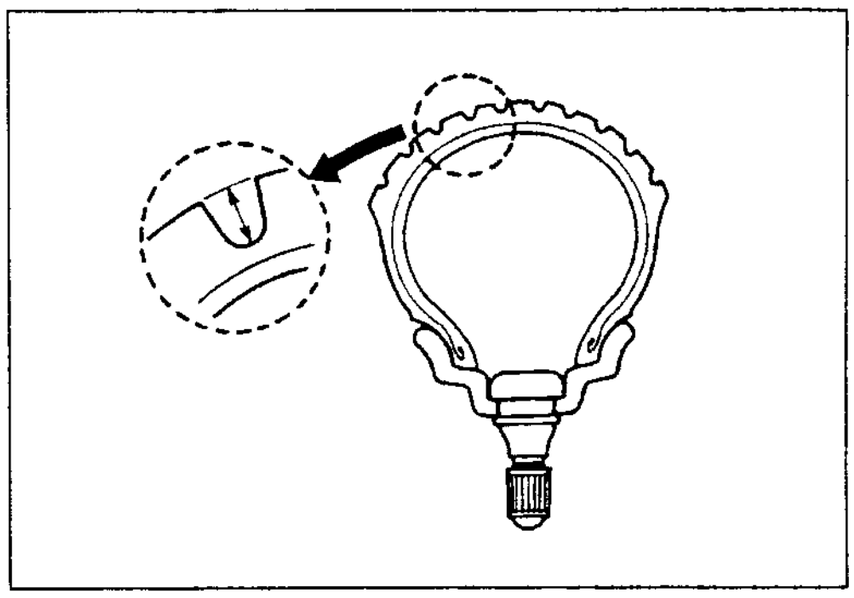

VALVE INSPECTION

Inspect the valve after the tire is removed from the rim. Replace the valve with a new one if the seal rubber is peeling or has damage.

NOTE:
If the external appearance of the valve shows no abnormal condition, removing of the valve is not necessary.
Inspect the valve core.
If the seal has abnormal deformation, replace the valve with a new one.

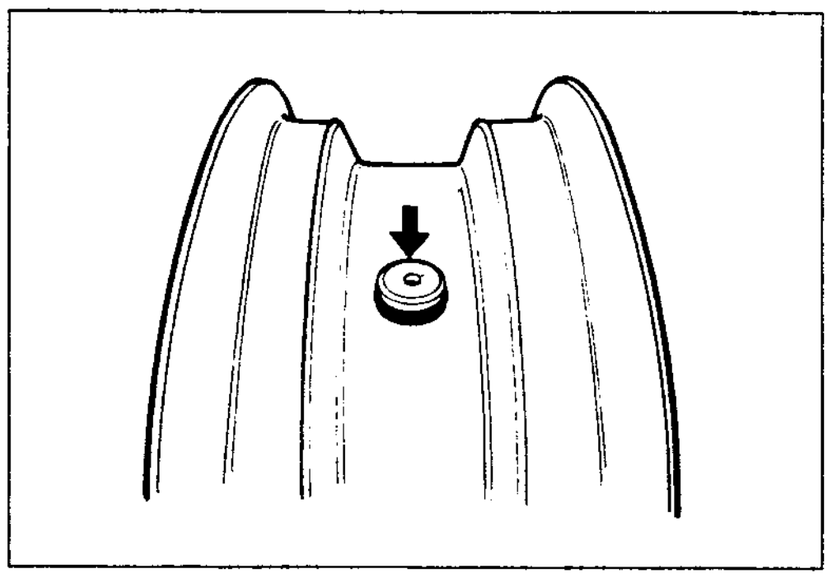

VALVE INSTALLATION

Any dust or rust around the valve hole must be cleaned off.
Then install the valve in the rim.

NOTE:
To properly install the valve into the valve hole, apply a special tire lubricant or neutral soapy liquid to the valve.

⚠ CAUTION

Be careful not to damage the lip of valve.

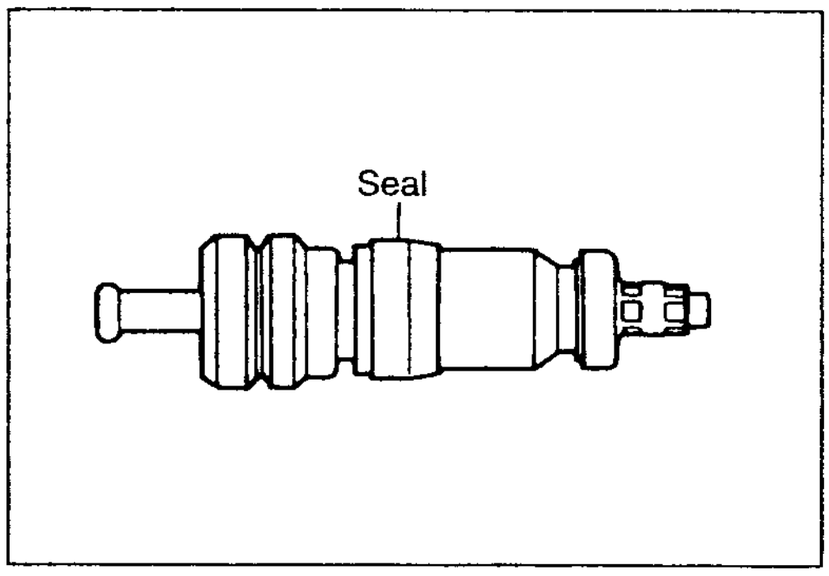

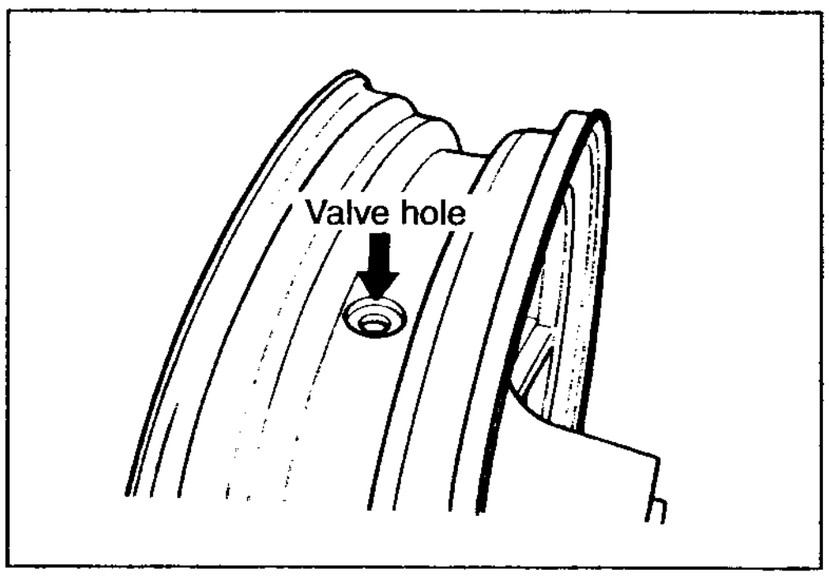

TIRE INSTALLATION

- Apply tire lubricant to the tire bead.
- When installing the tire onto the wheel, observe the following points.

⚠ CAUTION

Do not reuse the valve which has been once removed.

⚠ CAUTION

Never use oil, grease or gasoline on the tire bead in place of tire lubricant.

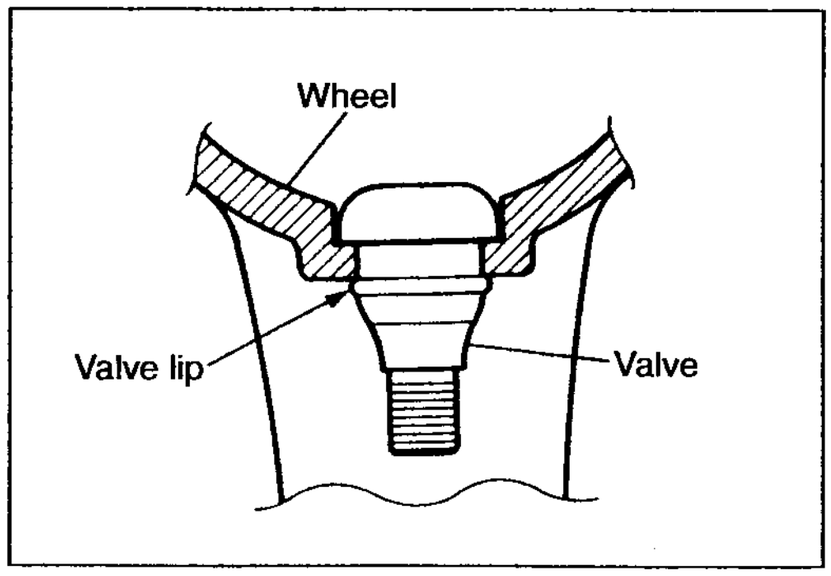

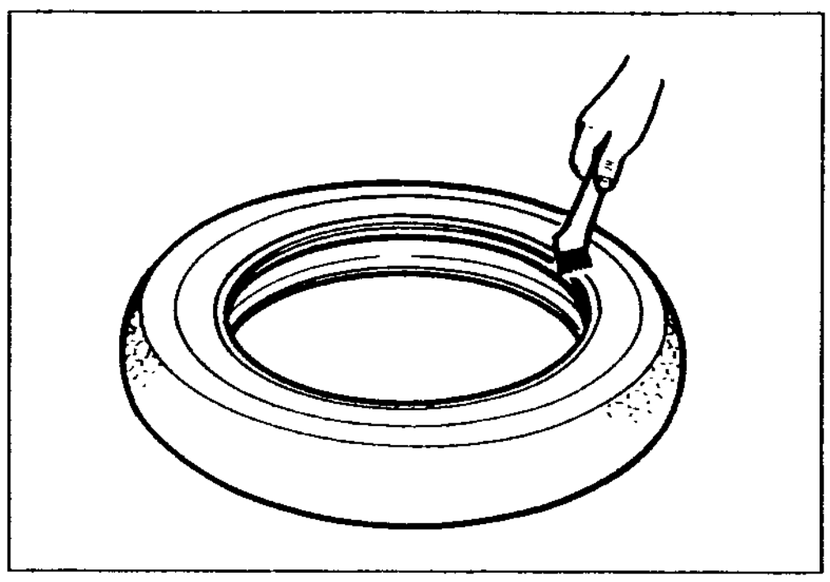

- When installing the tire, the arrow ① on the side wall should point to the direction of wheel rotation.
- Align the chalk mark put on the tire at the time of removal with the valve position.

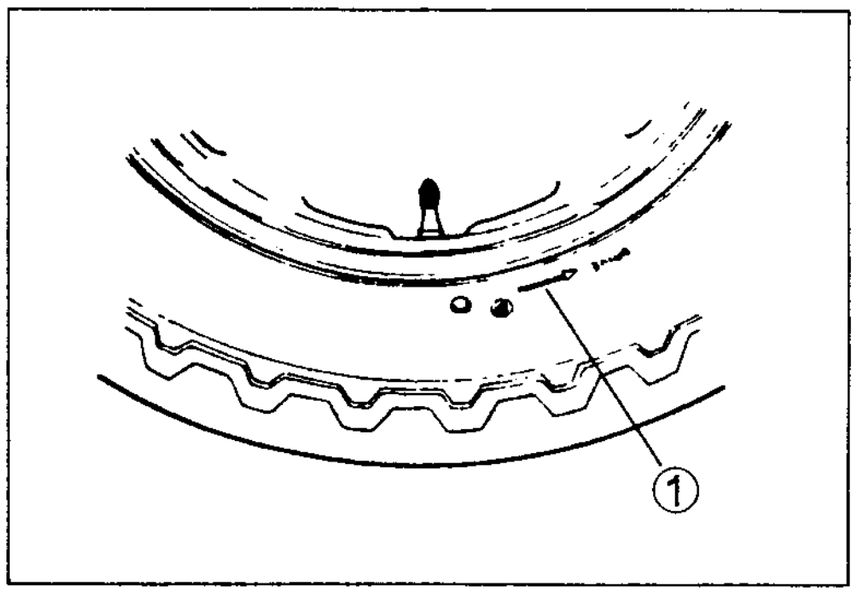

- For installation procedure of tire onto the wheel, follow the instructions given by the tire changer manufacturer.
- Bounce the tire several times while rotating. This makes the tire bead expand outward to contact the wheel, thereby facilitating air inflation.
- Pump up the tire with air.

⚠ WARNING

*** Do not inflate the tire to more than 400 kPa (4.0kgf/cm²). If inflated beyond this limit, the tire can burst and possibly cause injury. Do not stand directly over the tire while inflating.**
*** In the case of preset pressure air inflator, pay special care for the set pressure adjustment.**

- In this condition, check the "rim line" cast on the tire side walls. The line must be equidistant from the wheel rim all around. If the distance between the rim line and wheel rim varies, this indicates that the bead is not properly seated. If this is the case, deflate the tire completely and unseat the bead for both sides. Coat the bead with lubricant and fit the tire again.
- When the bead has been fitted properly, inflate air and adjust the pressure to specification.
- As necessary, adjust the tire balance.

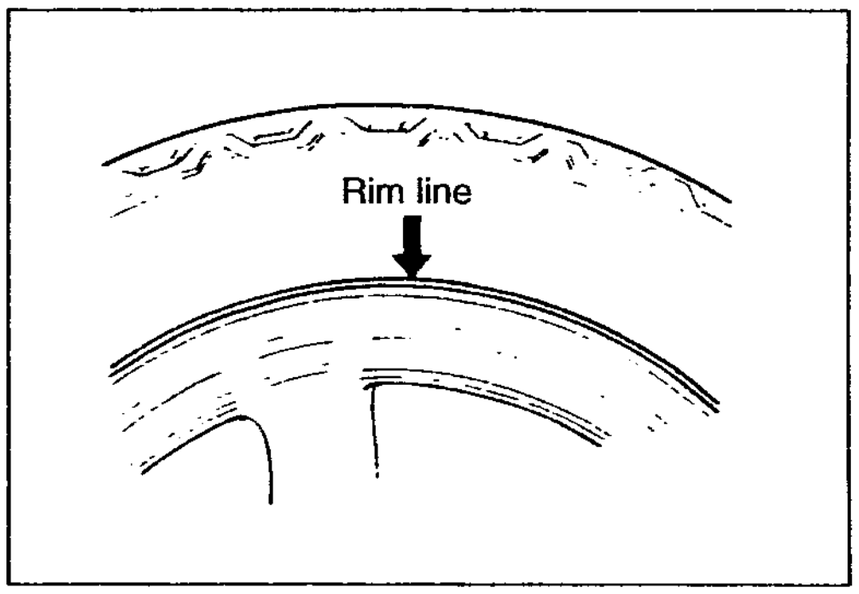

⚠ CAUTION

Do not run with a repaired tire at a high speed.

DATA Cold inflation tire pressure

Solo riding:	**Front:**	**250 kPa (2.50 kgf/cm², 36 psi)**
	Rear:	**290 kPa (2.90 kgf/cm², 42 psi)**
Dual riding:	**Front:**	**250 kPa (2.50 kgf/cm², 36 psi)**
	Rear:	**290 kPa (2.90 kgf/cm², 42 psi)**

BALANCER WEIGHT

- When installing the balancer weights to front wheel, set the two balancer weights on both sides of wheel rim.

⚠ CAUTION

Weight difference between the two balancer weights must be less than 10 g.

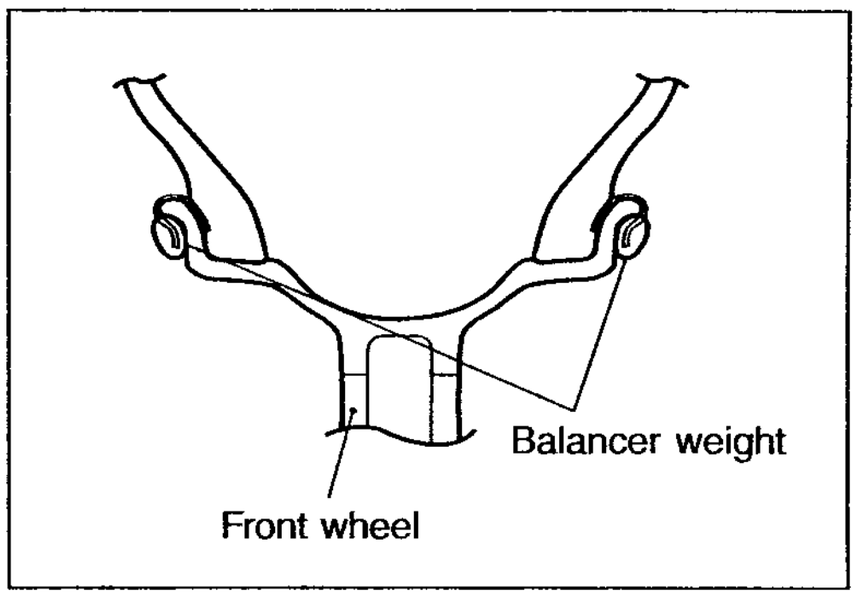

DRIVE CHAIN

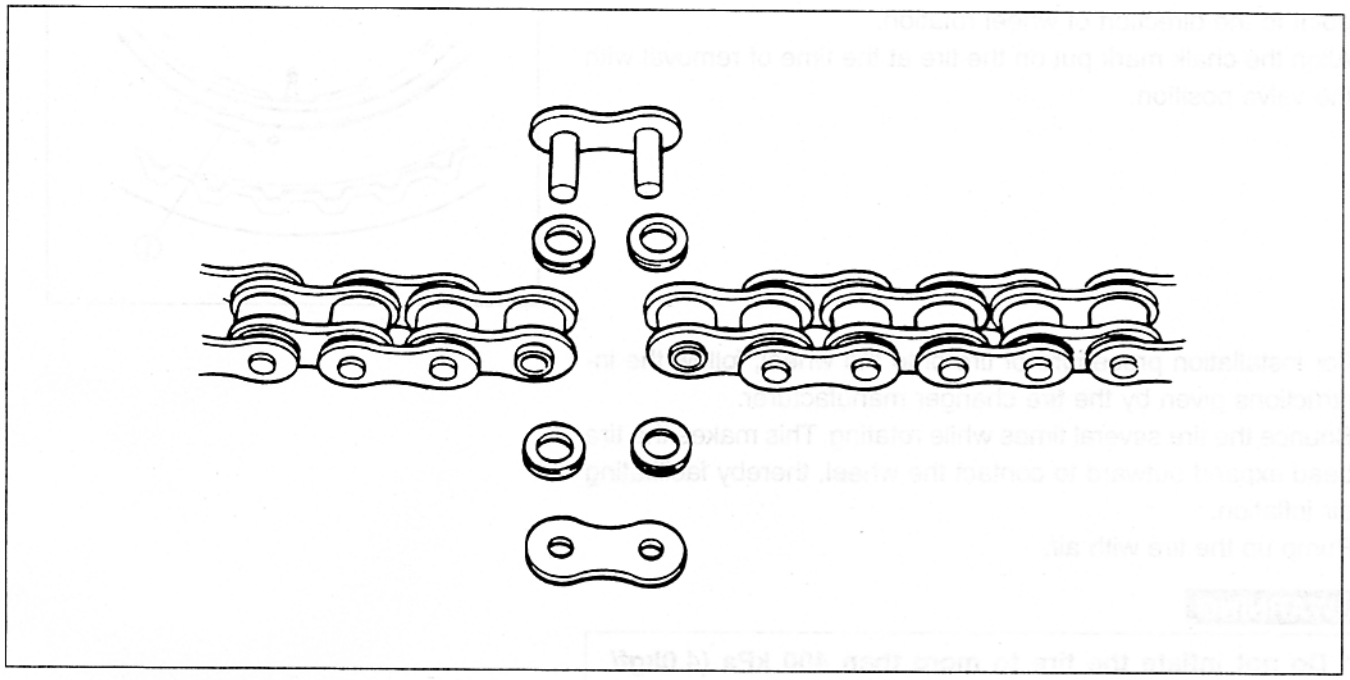

Use the special tool in the following procedures, to cut and rejoin the drive chain.

TOOL 09922-22711: Drive chain cutting and joining tool set

NOTE:
When using the special tool, apply a small quantity of grease to the threaded parts of the special tool.

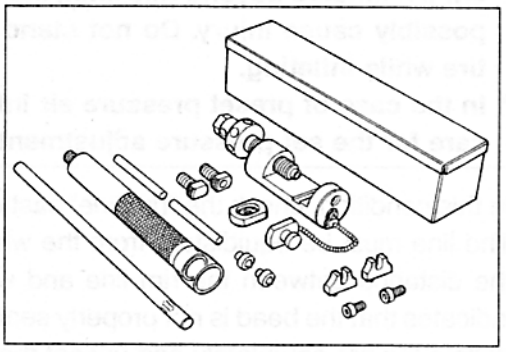

DRIVE CHAIN CUTTING

- Set up the special tool as shown in the illustration.
  - ① Tool body
  - ② Grip handle
  - ③ Pressure bolt "A"
  - ④ Pressure bolt "B"
  - ⑤ Bar
  - ⑥ Adjuster bolt (with through hole)
  - ⑦ Pin remover
  - ⑧ Chain holder (engraved mark 500) with reamer bolt M5×10

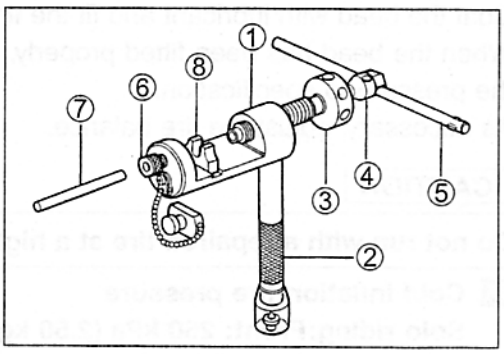

NOTE:
The tip of pin remover ⑦ should be positioned inside approximately 5 mm (0.2 in) from the end face of pressure bolt "A" ③ as shown in the illustration.

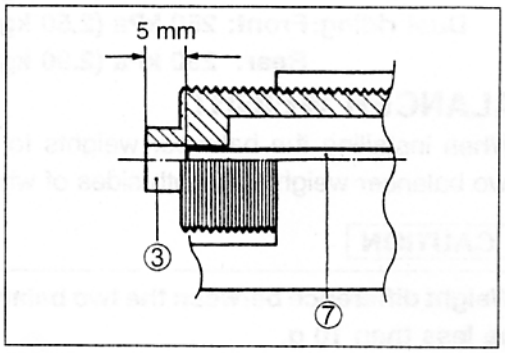

- Place the drive chain link being disjointed on the holder part ⑧ of the tool.
- Turn in both the adjuster bolt ⑥ and pressure bolt "A" ③ so that each of their end hole fits over the chain joint pin properly.
- Tighten the pressure bolt "A" ③ with the bar.

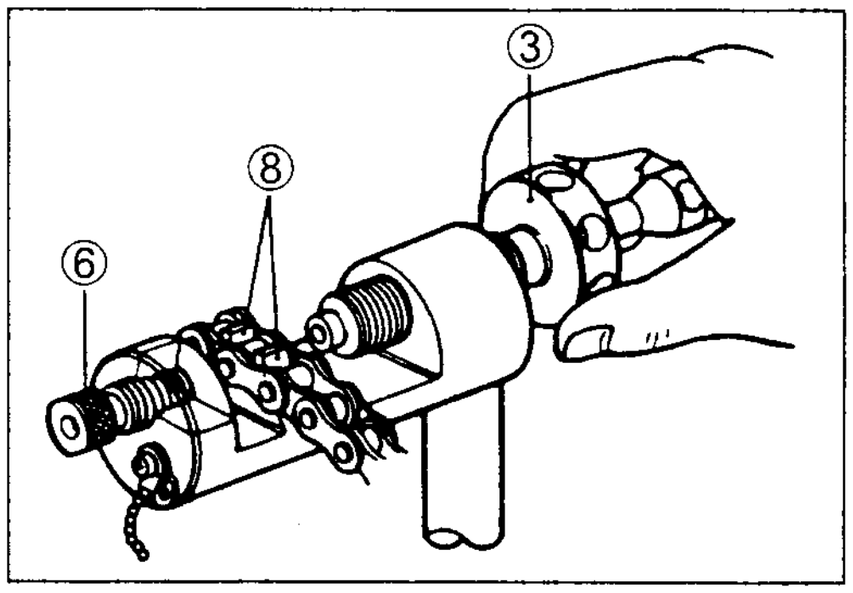

- Turn in the pressure bolt "B" ④ with the bar ⑤ and force out the drive chain joint pin ⑨.

⚠ CAUTION

Continue turning in the pressure bolt "B" ④ until the joint pin has been completely pushed out of the chain.

NOTE:
After the joint pin ⑨ is removed, loosen the pressure bolt "B" ④ and then pressure bolt "A" ③.

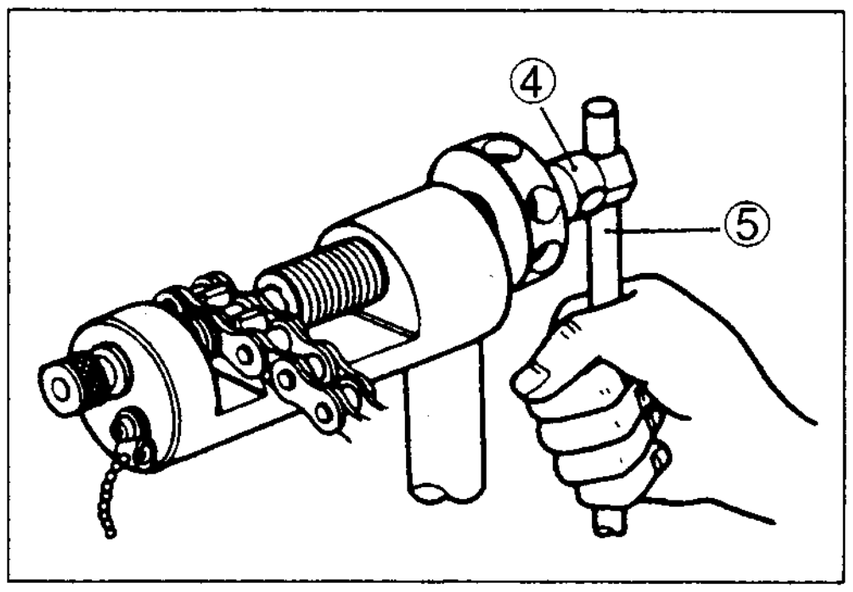

- Remove the joint pin ⑨ of the other side of joint plate.

⚠ CAUTION

Never reuse joint pins, O-rings and plates. After joint pins, O-rings and plates have been removed from the drive chain, the removed joint pins, O-rings and plates should be discarded and new joint plate, O-rings and plate must be installed.

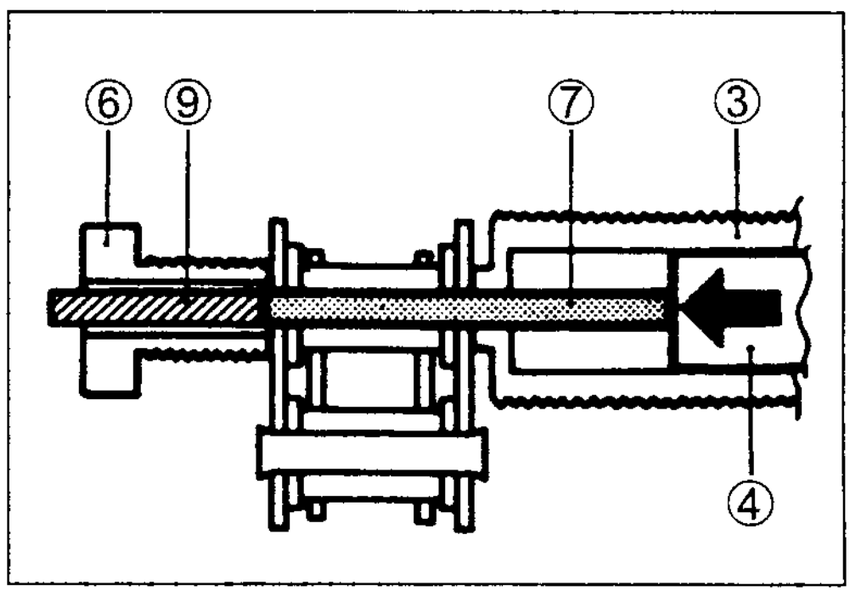

DRIVE CHAIN CONNECTING

JOINT PLATE INSTALLATION

- Set up the special tool as shown in the illustration.
  - ① Tool body
  - ② Grip handle
  - ③ Joint plate holder (engraved mark "F50")
  - ④ Wedge holder & wedge pin
  - ⑤ Adjuster bolt (without hole)
  - ⑥ Pressure bolt "A"
  - ⑦ Bar

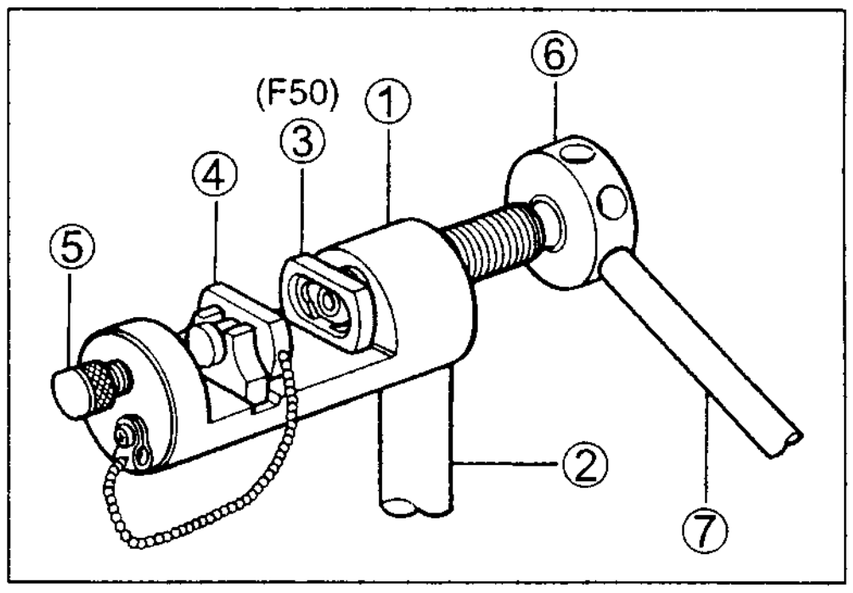

- Connect both ends of the drive chain with the joint pin ⑧ inserted from the wheel side as installed on the motorcycle.
  - ⑨ O-ring ..... 4 pcs
  - ⑩ Joint plate

Joint set part number
DID: 27620-40F00

⚠ WARNING

Do not use joint clip type of drive chain. The joint clip may have a chance to drop which may cause severe damage to motorcycle and severe injury.

- Apply grease on the recessed portion of the joint plate holder ③ and set the joint plate ⑩.

NOTE:
When positioning the joint plate ⑩ on the tool, face its stamp mark on the joint plate holder ③ side.

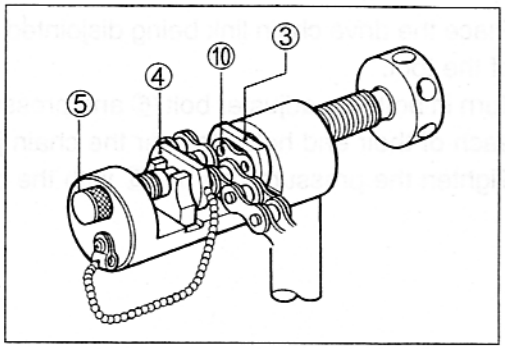

- Set the drive chain on the tool as illustrated and turn in the adjuster bolt ⑤ to secure the wedge holder & wedge pin ④.
- Turn in the pressure bolt "A" ⑥ and align two joint pins ⑪ properly with the respective holes of the joint plate ⑩
- Turn in the pressure bolt "A" ⑥ further using the bar ⑦ to press the joint plate over the joint pins.

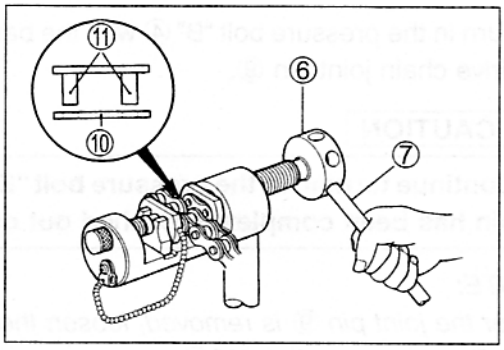

- Continue pressing the joint plate until the distance between the two joint plates come to the specification.

Joint plate distance specification Ⓦ

DID	21.05 – 21.35 mm (0.829 – 0.841 in)

⚠ CAUTION

Should pressing of the joint plate be made excessively beyond the specified dimension, the work should be redone using the new joint parts.

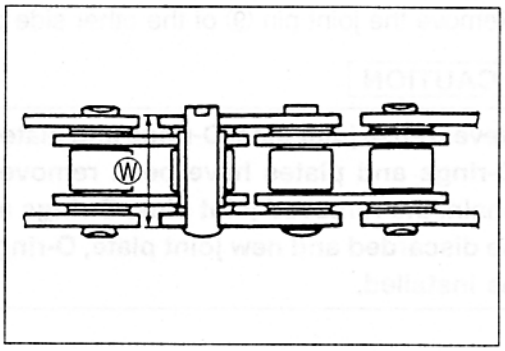

JOINT PIN STAKING

- Set up the special tool as shown in the illustration.
  ① Tool body
  ② Grip handle
  ③ Pressure bolt "A"
  ④ Adjuster bolt (without hole)
  ⑤ Staking pin (stowed inside grip handle behind rubber cap)
  ⑥ Bar

NOTE:
Before staking the joint pin, apply a small quantity of grease of the staking pin ⑤.

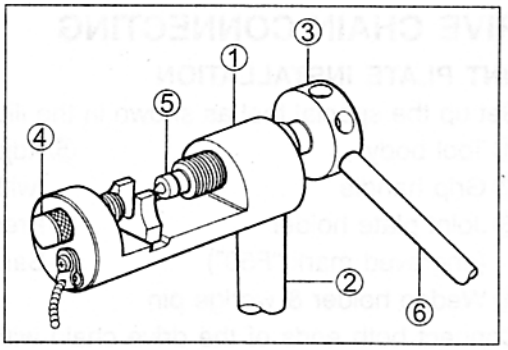

- Stake the joint pin by turning (approximately 7/8 turn) the pressure bolt "A" ③ with the bar until the pin end diameter becomes the specified dimension.

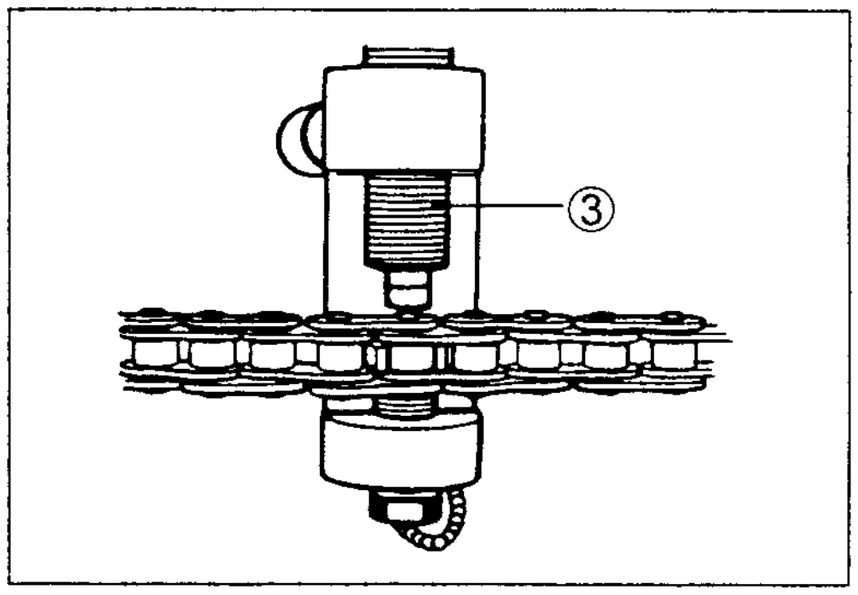

Pin end diameter specification Ⓓ

DID	5.50 – 5.75 mm (0.217 – 0.226 in)

⚠ CAUTION

*** After joining of the chain has been completed, check to make sure that the link is smooth and no abnormal condition is found.**
*** Should any abnormal condition be found, reassemble the chain link using the new joint parts.**

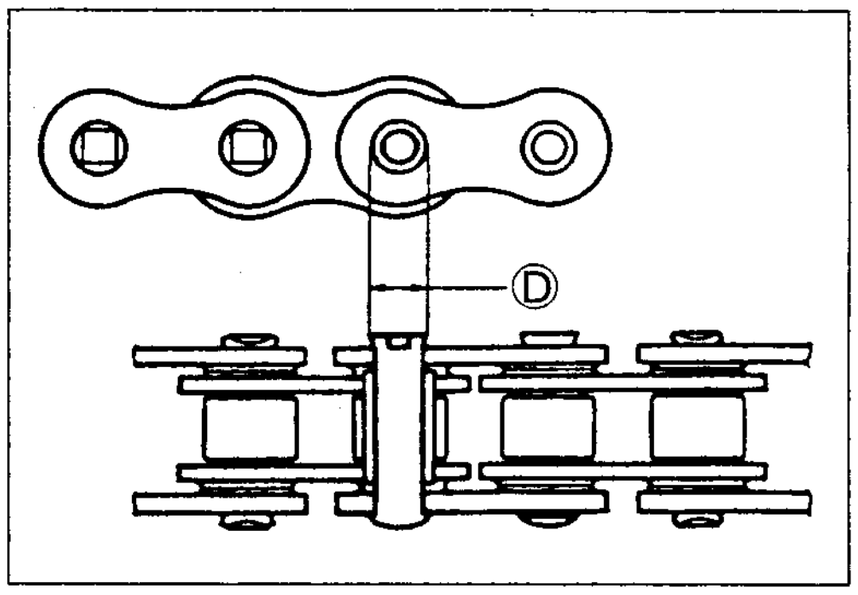

- Adjust the drive chain, after connecting it. (☞ 2-19)

ELECTRICAL SYSTEM

CONTENTS

CAUTIONS IN SERVICING 7- 2
LOCATION OF ELECTRICAL COMPONENTS 7- 4
CHARGING SYSTEM 7- 6
TROUBLESHOOTING 7- 6
INSPECTION 7- 7
STARTER SYSTEM AND SIDE-STAND/IGNITION INTERLOCK SYSTEM 7-10
TROUBLESHOOTING 7-10
STARTER MOTOR REMOVAL AND DISASSEMBLY 7-11
STARTER MOTOR INSPECTION 7-12
STARTER MOTOR REASSEMBLY 7-12
STARTER RELAY INSPECTION 7-13
SIDE-STAND/IGNITION INTERLOCK SYSTEM PARTS INSPECTION 7-14
IGNITION SYSTEM 7-17
TROUBLESHOOTING 7-17
INSPECTION 7-19
COMBINATION METER 7-23
DESCRIPTION 7-23
REMOVAL AND DISASSEMBLY 7-24
INSPECTION 7-25
LAMPS 7-29
RELAYS 7-30
SWITCHES 7-30
BATTERY 7-32
SPECIFICATIONS 7-32
INITIAL CHARGING 7-32
SERVICING 7-33
RECHARGING OPERATION 7-34

CAUTIONS IN SERVICING

CONNECTOR

- When connecting a connector, be sure to push it in until a click is felt.
- Inspect the connector for corrosion, contamination and breakage in its cover.

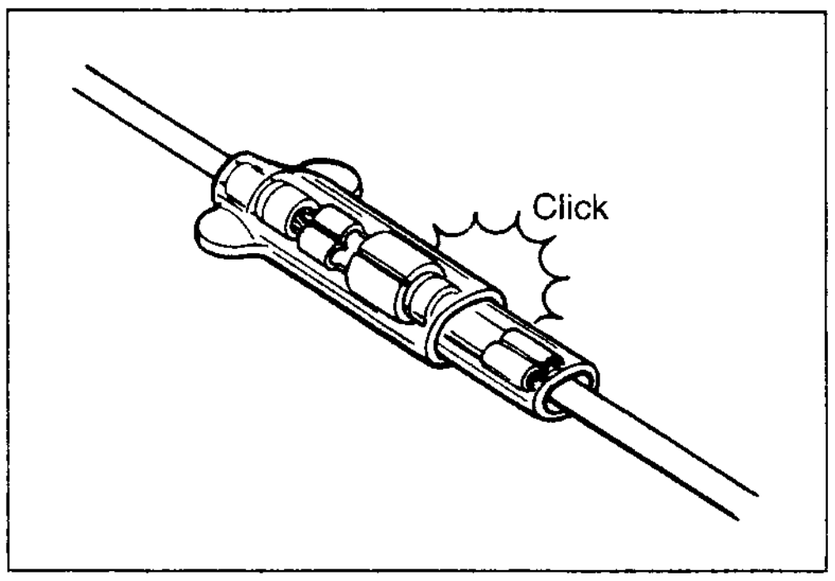

COUPLER

- With a lock type coupler, be sure to release the lock before disconnecting it and push it in fully till the lock works when connecting it.
- When disconnecting the coupler, be sure to hold the coupler itself and do not pull the lead wires.
- Inspect each terminal on the coupler for being loose or bent.
- Inspect each terminal for corrosion and contamination.

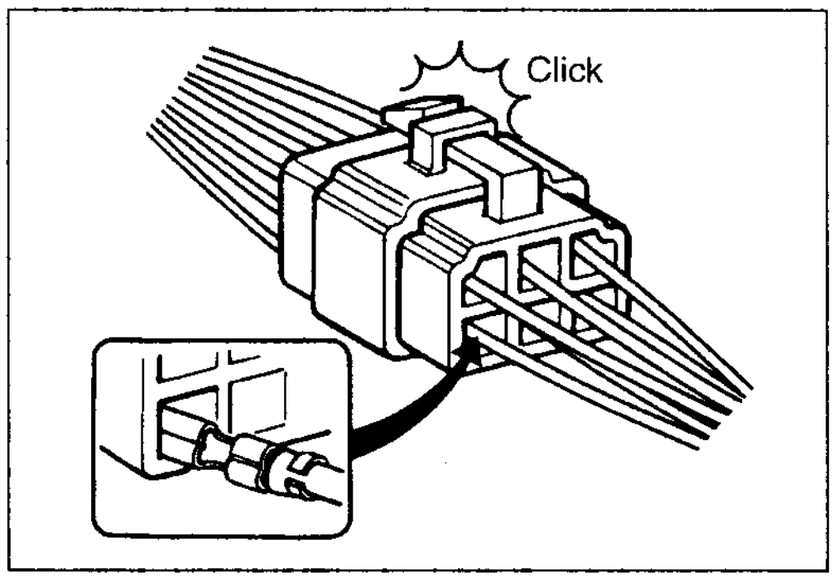

CLAMP

- Clamp the wire harness at such positions as indicated in "WIRE HARNESS ROUTING". (☞8-14, 15)
- Bend the clamp properly so that the wire harness is clamped securely.
- In clamping the wire harness, use care not to allow it to hang down.
- Do not use wire or any other substitute for the band type clamp.

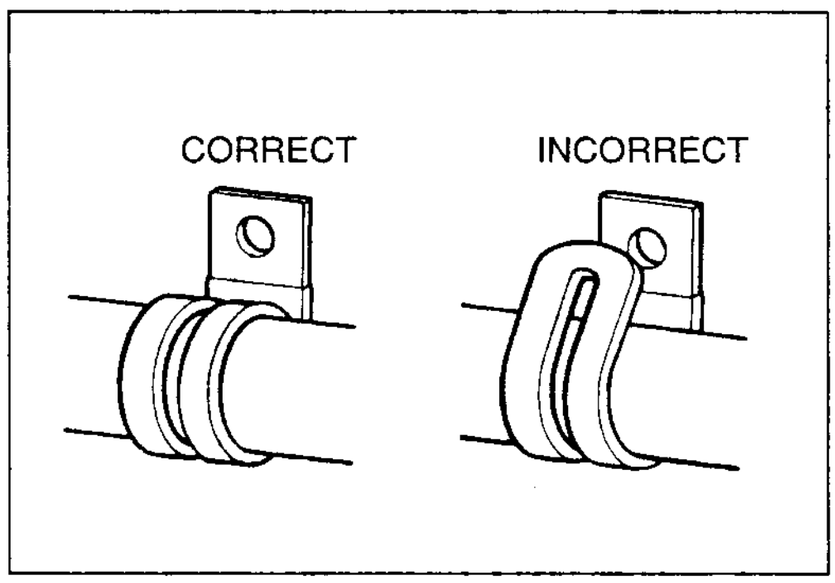

FUSE

- When a fuse blows, always investigate the cause, correct it and then replace the fuse.
- Do not use a fuse of a different capacity.
- Do not use wire or any other substitute for the fuse.

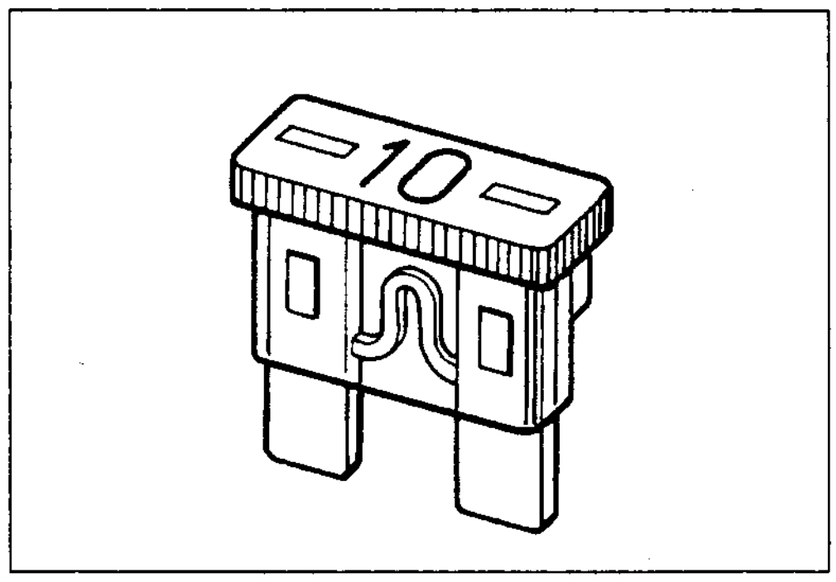

SEMI-CONDUCTOR EQUIPPED PART

- Be careful not to drop the part with a semi-conductor built in such as a ECM.
- When inspecting this part, follow inspection instruction strictly. Neglecting proper procedure may cause damage to this part.

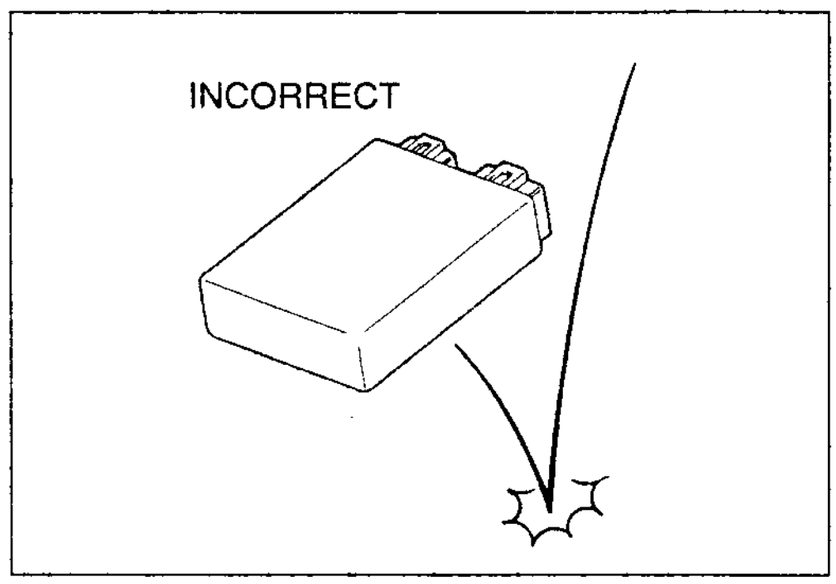

BATTERY

- The MF battery used in this vehicle does not require maintenance (e.g., electrolyte level inspection, distilled water replenishment).
- During normal charging, no hydrogen gas is produced. However, if the battery is overcharged, hydrogen gas may be produced. Therefore, be sure there are no fire or spark sources (e.g., short circuit) nearby when charging the battery.
- Be sure to recharge the battery in a well-ventilated and open area.
- Note that the charging system for the MF battery is different from that of a conventional battery. Do not replace the MF battery with a conventional battery.

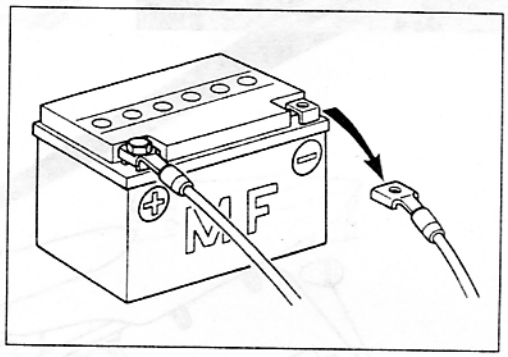

CONNECTING THE BATTERY

- When disconnecting terminals from the battery for disassembly or servicing, be sure to disconnect the ⊖ battery lead wire, first.
- When connecting the battery lead wires, be sure to connect the ⊕ battery lead wire, first.
- If the terminal is corroded, remove the battery, pour warm water over it and clean it with a wire brush.
- After connecting the battery, apply a light coat of grease to the battery terminals.
- Install the cover over the ⊕ battery terminal.

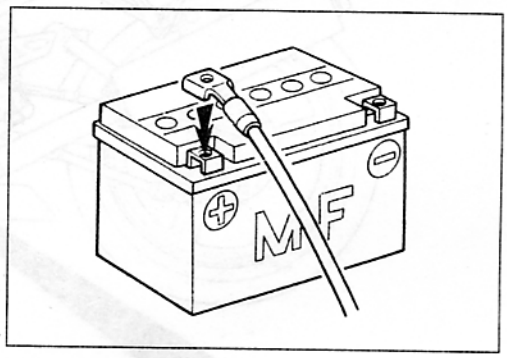

WIRING PROCEDURE

- Properly route the wire harness according to the "WIRE ROUTING" section. (☞8-14, 15)

USING THE MULTI CIRCUIT TESTER

- Properly use the multi circuit tester ⊕ and ⊖ probes. Improper use can cause damage to the motorcycle and tester.
- If the voltage and current values are not known, begin measuring in the highest range.
- When measuring the resistance, make sure that no voltage is applied. If voltage is applied, the tester will be damaged.
- After using the tester, be sure to turn the switch to the OFF position.

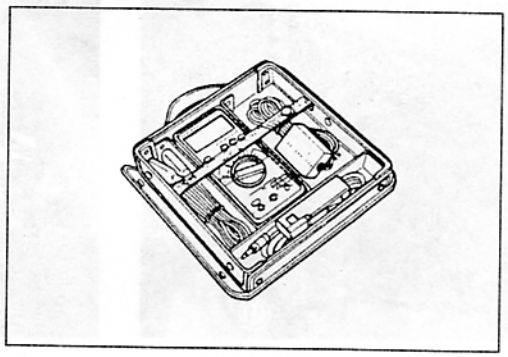

⚠ CAUTION

Before using the multi circuit tester, read its instruction manual.

LOCATION OF ELECTRICAL COMPONENTS

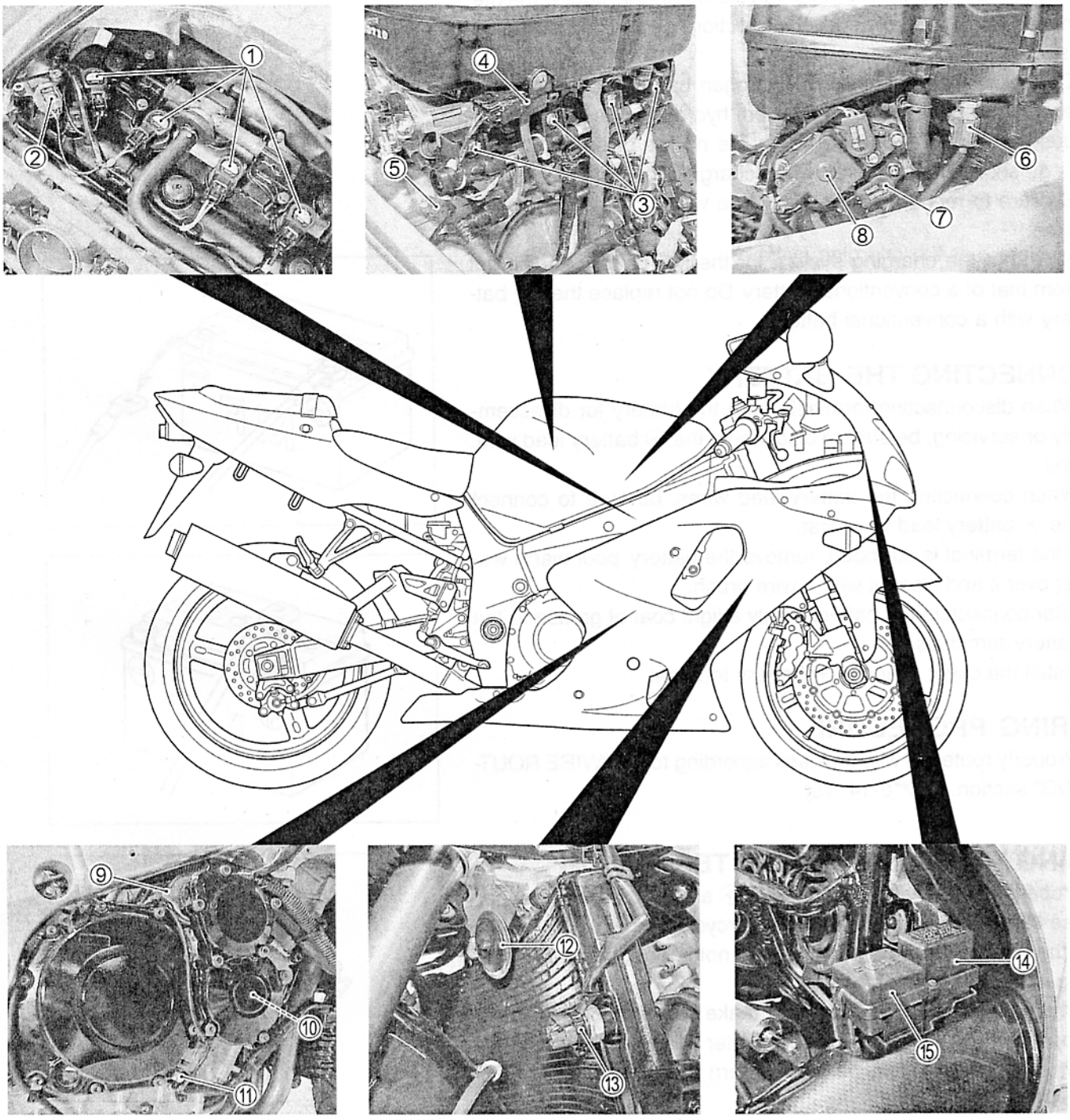

① Ignition coil (No.1, 2, 3, 4)
② Camshaft position sensor (☞4-36)
③ Fuel injector (☞4-51)
④ Intake air pressure sensor (☞4-38)
⑤ Engine coolant temp. sensor (☞4-42)
⑥ Intake air temp. sensor (☞4-43)
⑦ Throttle position sensor (☞4-40)
⑧ Secondary throttle valve actuator (☞4-47)
⑨ Starter motor
⑩ Crankshaft position sensor (☞4-37)
⑪ Oil pressure switch
⑫ Horn
⑬ Cooling fan thermo-switch
⑭ Turn signal/side-stand relay
⑮ Fuse box

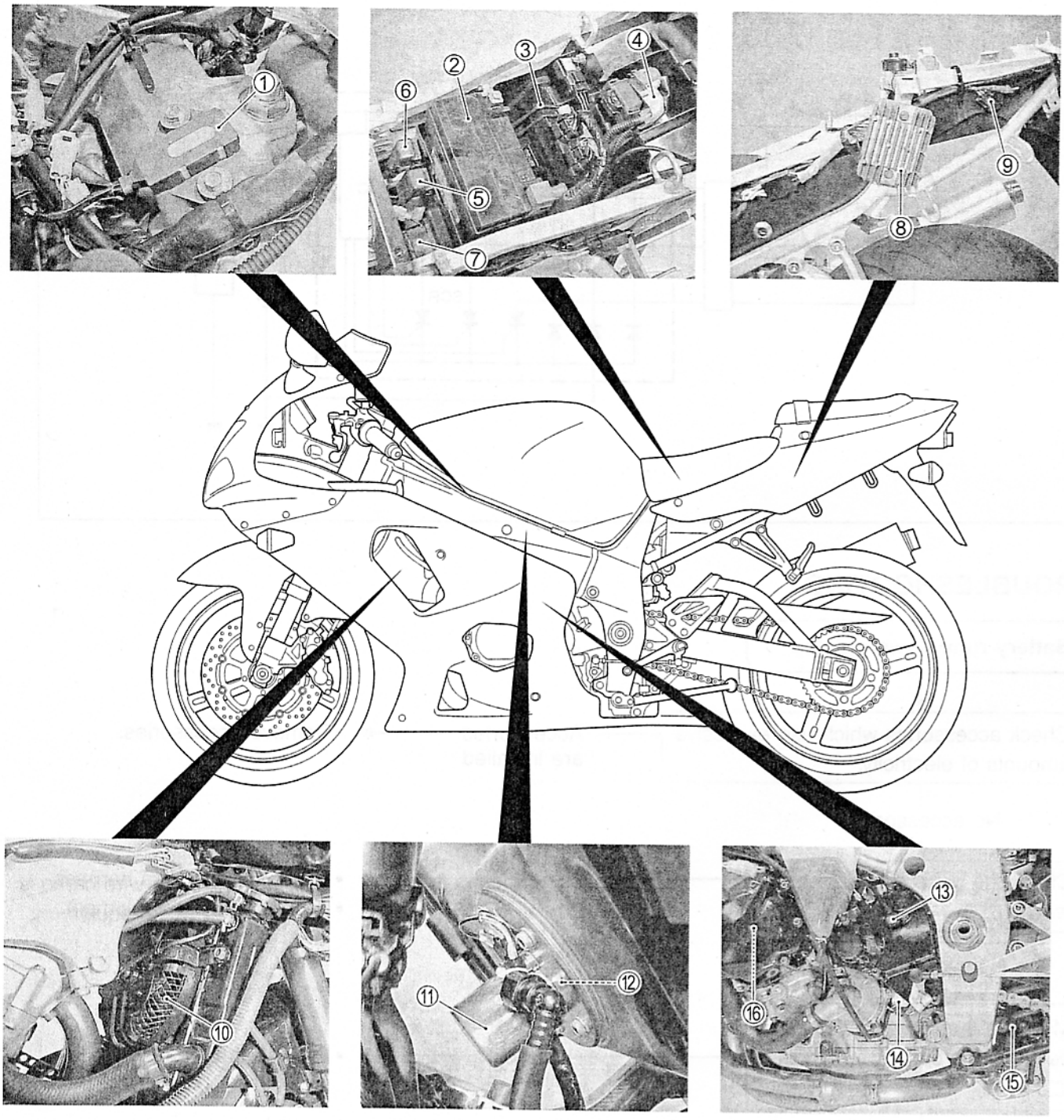

① Fuel level resistor
② Battery
③ ECM (Engine Control Module)
④ Starter relay/Main fuse
⑤ Fuel pump relay (☞4-60)
⑥ Fan motor relay (☞5-7)
⑦ Tip over sensor (☞4-46)
⑧ Regulator/Rectifier
⑨ Mode selection switch coupler (☞4-33)
⑩ Cooling fan (☞5-6)
⑪ Fuel pump (☞4-58)
⑫ Fuel level switch
⑬ Speedometer sensor
⑭ Gear position switch
⑮ Side-stand switch
⑯ Generator

CHARGING SYSTEM

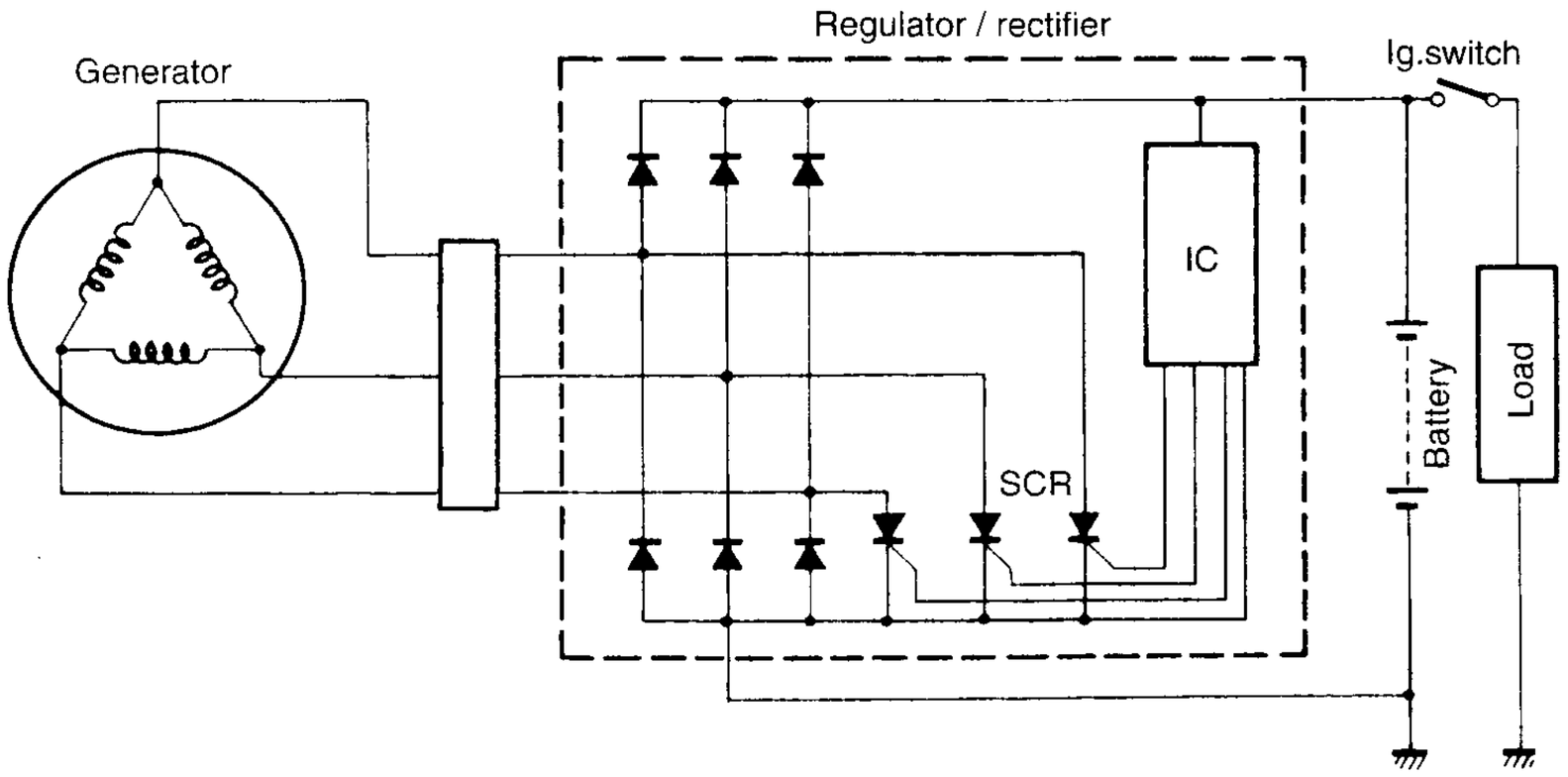

TROUBLESHOOTING

Battery runs down quickly.

Check accessories which use excessive amounts of electricity.
- Accessories are installed → • Remove accessories.

No accessories

Check the battery for current leaks. (☞ 7-7)
- Current leaks → • Short circuit of wire harness; • Faulty electrical equipment

No current leaks

Measure the charging voltage between the battery terminals. (☞ 7-8)
- Correct → • Faulty battery

Incorrect

Measure the continuity of the generator coil. (☞ 7-8)
- No continuity → • Faulty generator coil or disconnected lead wires

Continuity

Continued on next page

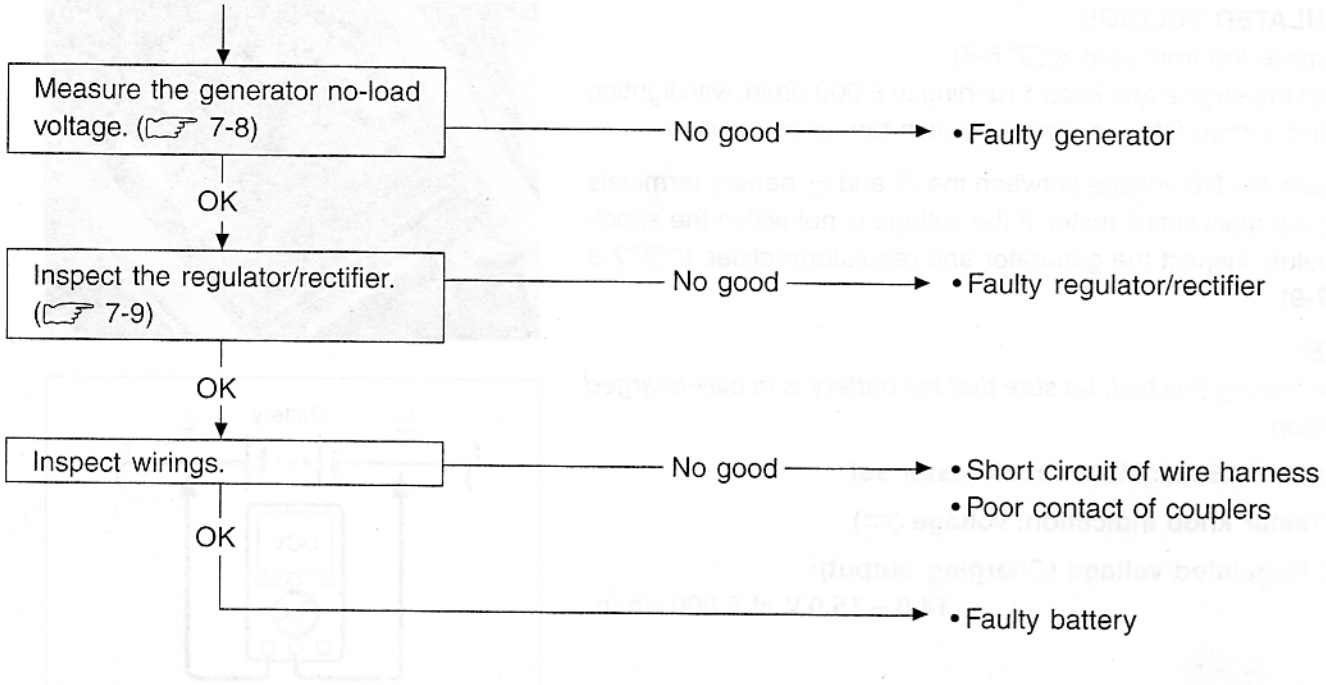

Others

Battery overcharge	• Faulty regulator/rectifier • Faulty battery • Poor contact of generator lead wire coupler

INSPECTION

BATTERY CURRENT LEAKAGE

- Remove the front seat. (☞6-6)
- Turn the ignition switch to the OFF position.
- Disconnect the battery ⊖ lead wire.

Measure the current between ⊖ battery terminal and the ⊖ battery lead wire using the multi circuit tester. If the reading exceeds the specified value, leakage is evident.

TOOL 09900-25008: Multi circuit tester set

DATA Battery current (leak): Under 3 mA

Tester knob indication: Current (⎓, 20 mA)

⚠ CAUTION

*** Because the current leak might be large, turn the tester to high range first to avoid tester damage.**
*** Do not turn the ignition switch to the "ON" position when measuring current.**

When checking to find the excessive current leakage, remove the couplers and connectors, one by one, checking each part.

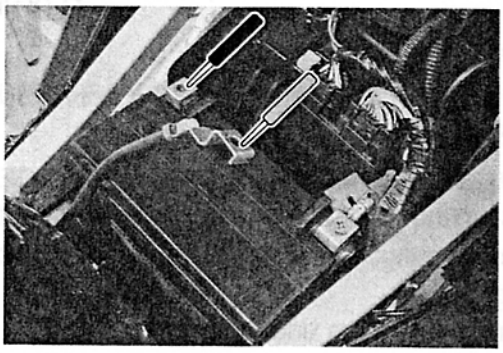

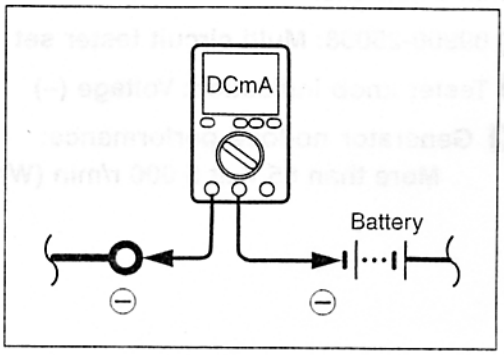

REGULATED VOLTAGE

- Remove the front seat. (☞6-6)
- Start the engine and keep it running at 5 000 r/min. with lighting switch turned ON and dimmer switch turned HI position.

Measure the DC voltage between the ⊕ and ⊖ battery terminals using the multi circuit tester. If the voltage is not within the specified value, inspect the generator and regulator/rectifier. (☞7-8 and 7-9)

NOTE:
When making this test, be sure that the battery is in fully-charged condition.

TOOL 09900-25008: Multi circuit tester set

Tester knob indication: Voltage (⎓)

DATA Regulated voltage (Charging output):
14.0 – 15.0 V at 5 000 r/min.

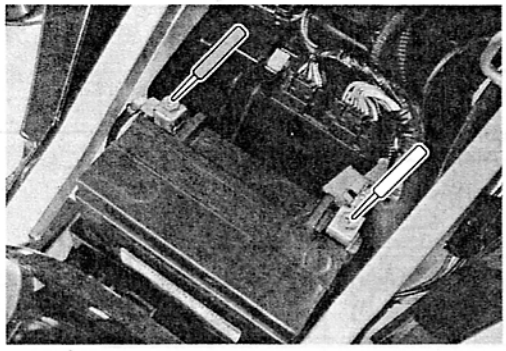

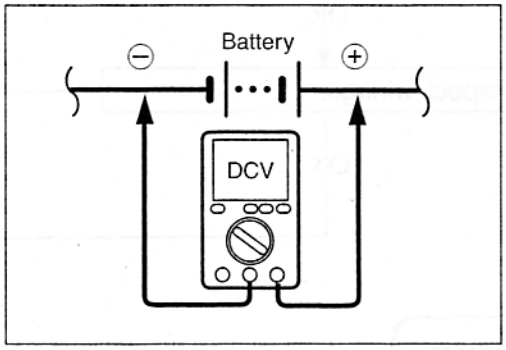

GENERATOR COIL RESISTANCE

- Remove the left under cowling. (☞6-3)
- Disconnect the generator coupler.

Measure the resistance between the three lead wires.
If the resistance is not specified value, replace the stator with a new one. Also, check that the generator core is insulated.

TOOL 09900-25008: Multi circuit tester set

Tester knob indication: Resistance (Ω)

DATA Generator coil resistance: 0.2 – 0.9 Ω (Yellow – Yellow)
∞ Ω (Yellow – Ground)

NOTE:
When making above test, it is not necessary to remove the generator.

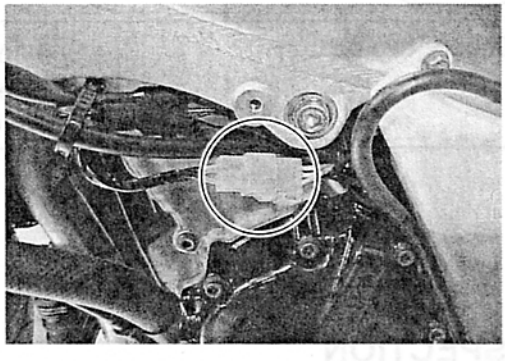

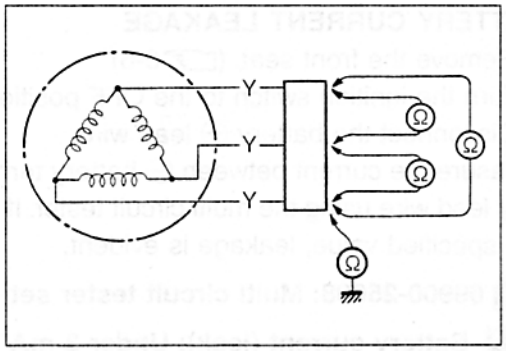

GENERATOR NO-LOAD PERFORMANCE

- Start the engine and keep it running at 5 000 r/min.

Using the multi circuit tester, measure the voltage between three lead wires.
If the tester reads under the specified value, replace the generator with a new one.

TOOL 09900-25008: Multi circuit tester set

Tester knob indication: Voltage (~)

DATA Generator no-load performance:
More than 65 V at 5 000 r/min (When engine is cold)

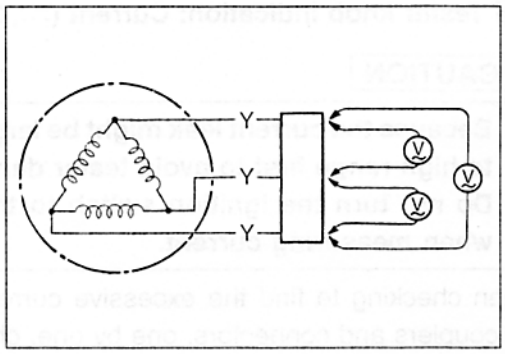

REGULATOR/RECTIFIER

- Remove the frame cover. (☞6-6)
- Disconnect the regulator/rectifier coupler.

Measure the voltage between the lead wires using the multi circuit tester as indicated in the table below. If the voltage is not within the specified value, replace the regulator/rectifier with a new one.

TOOL 09900-25008: Multi circuit tester set

Tester knob indication: Diode test (⊣◀)

Unit: V

⊖ Probe of tester to: / ⊕ Probe of tester to:	B/R	B1	B2	B3	B/W
B/R		0.4 – 0.7	0.4 – 0.7	0.4 – 0.7	0.5 – 1.2
B1	*		*	*	0.4 – 0.7
B2	*	*		*	0.4 – 0.7
B3	*	*	*		0.4 – 0.7
B/W	*	*	*	*	

* More than 1.4 V (tester's battery voltage)

NOTE:
If the tester reads under 1.4 V when the tester probes are not connected, replace the battery of multi circuit tester.

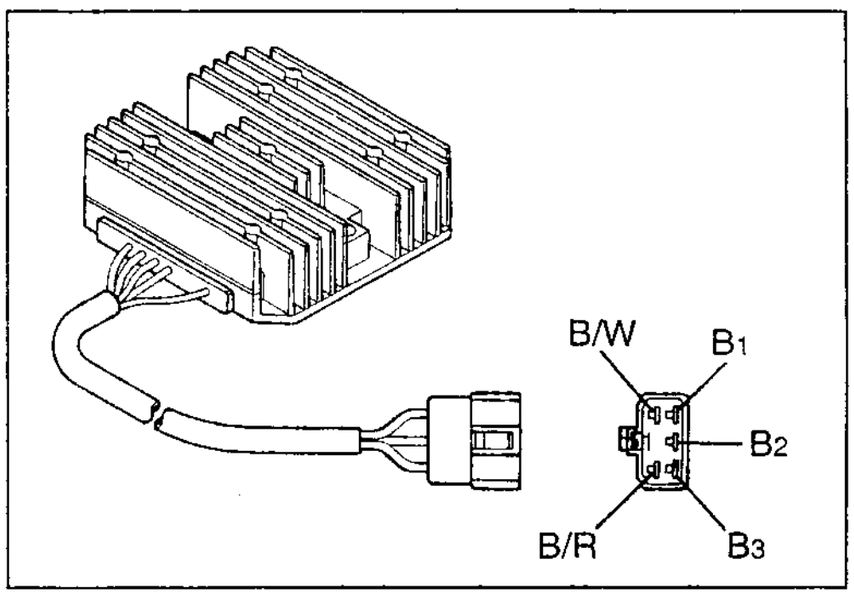

WIRE COLOR
B: Black, B/R: Black with Red tracer,
B/W: Black with White tracer

STARTER SYSTEM AND SIDE-STAND/IGNITION INTERLOCK SYSTEM

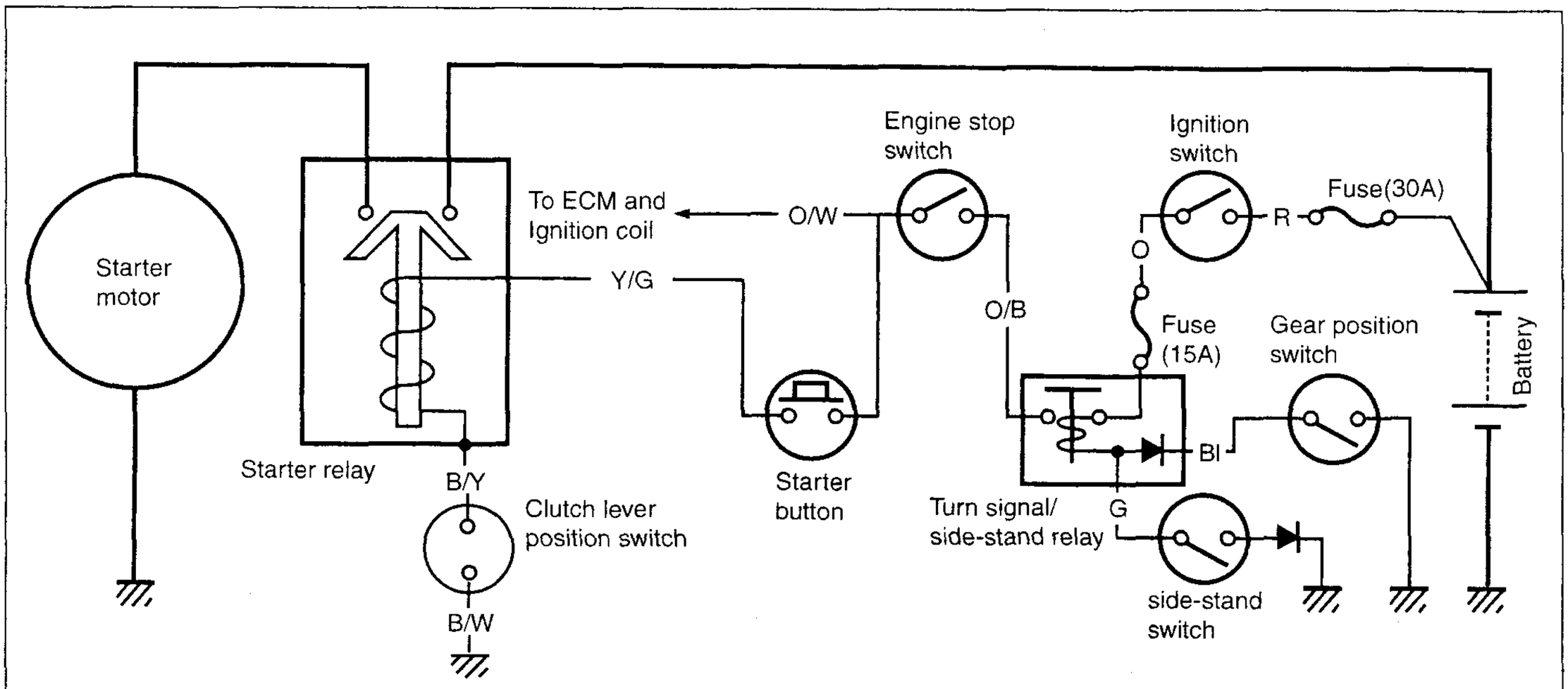

TROUBLESHOOTING

Starter motor will not run.

The transmission is in neutral. Grasp the clutch lever, turn on the ignition switch with the engine stop switch in the "RUN" position and listen for a click from the starter relay when the starter button is pushed.

- Clicks → Check if the starter motor runs when its terminal is connected to the battery ⊕ terminal (Do not use thin "wire" because a large amount of current flows)
  - Runs →
    - Faulty starter relay
    - Loose or disconnected starter motor lead wire
  - Does not run →
    - Faulty starter motor
- No click → Measure the starter relay voltage at the starter relay connectors (between Y/G ⊕ and B/Y ⊖) when the starter button is pushed.
  - No voltage →
    - Faulty ignition switch
    - Faulty engine stop switch
    - Faulty clutch lever position switch
    - Faulty gear position switch
    - Faulty turn signal/side-stand relay
    - Faulty starter button
    - Poor contact of connector
    - Open circuit in wire harness
  - Voltage →

Continued on next page

Check the starter relay.
(☞ 7-13)
— No good → • Faulty starter relay

OK
→ • Poor contact of the starter relay

The starter motor runs when the transmission is in neutral, but does not run when the transmission is in any position other than neutral, with the side-stand up.

Check the side-stand switch.
(☞ 7-14)
— No good → • Faulty side-stand switch

OK
→ • Open circuit in wire harness
• Poor contact of connector

Others

Engine does not turn though the starter motor runs.	• Faulty starter clutch

STARTER MOTOR REMOVAL AND DISASSEMBLY

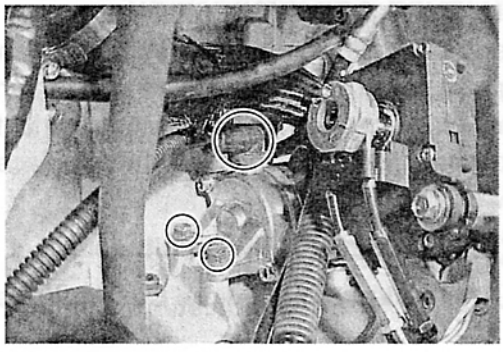

- Remove the starter motor.
- Disassemble the starter motor as shown in the illustration.

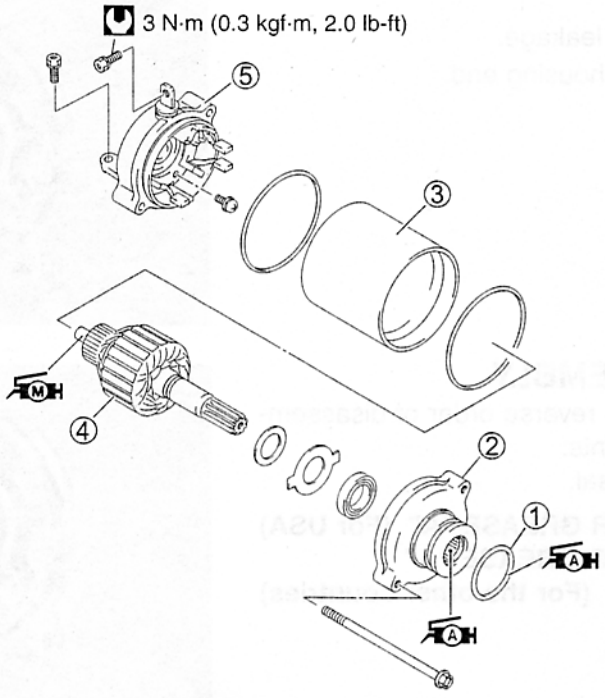

① O-ring
② Housing end (inside)
③ Starter motor case
④ Armature
⑤ Housing end (outside)

STARTER MOTOR INSPECTION

CARBON BRUSH

Inspect the brushes for abnormal wear, cracks, or smoothness in the brush holder.
If any damages are found, replace the brush assembly with a new one.

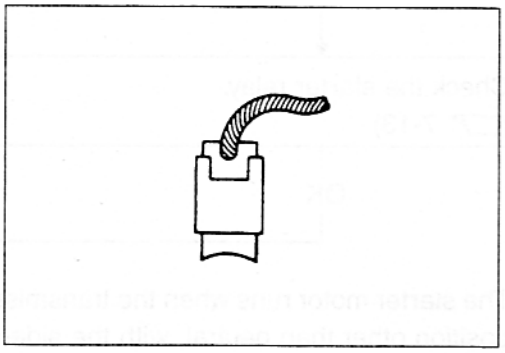

COMMUTATOR

Inspect the commutator for discoloration, abnormal wear or undercut Ⓐ.
If abnormal wear is found, replace the armature with a new one.
If the commutator surface is discolored, polish it with #400 sand paper and wipe it using a clean dry cloth.
If there is no undercut, scrape out the insulator ① with a saw blade.

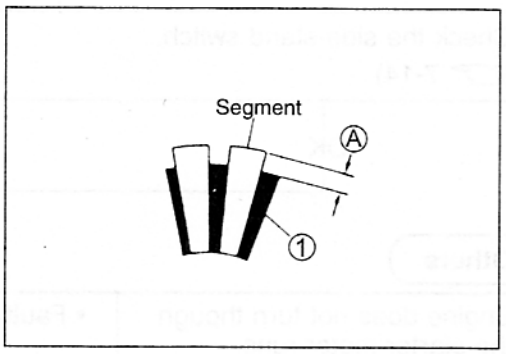

ARMATURE COIL INSPECTION

Check for continuity between each segment and between each segment and the armature shaft using the multi circuit tester.
If there is no continuity between the segments or there is continuity between the segments and shaft, replace the armature with a new one.

09900-25008: Multi circuit tester set

Tester knob indication: Continuity test (•)))

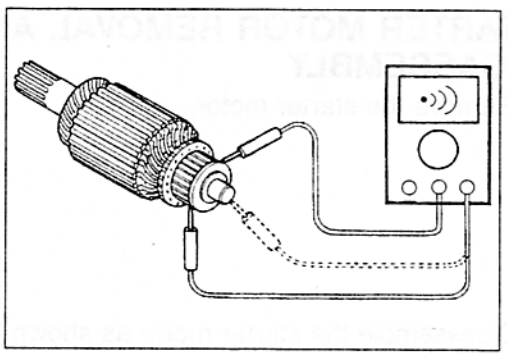

OIL SEAL INSPECTION

Check the oil seal lip for damage or leakage.
If any damage is found, replace the housing end.

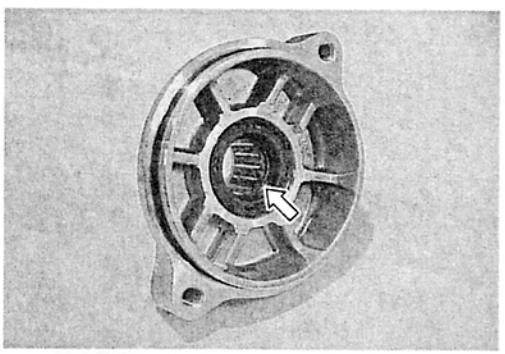

STARTER MOTOR REASSEMBLY

Reassemble the starter motor in the reverse order of disassembly. Pay attention to the following points:

- Apply grease to the lip of the oil seal.

99000-25030: SUZUKI SUPER GREASE "A" (For USA)
99000-25010: SUZUKI SUPER GREASE "A"
(For the other countries)

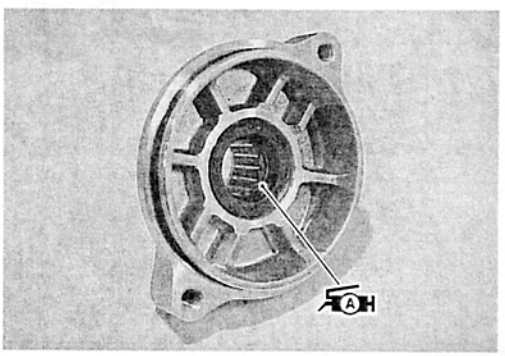

- Apply a small quantity of SUZUKI MOLY PASTE to the armature shaft.

99000-25140: SUZUKI MOLY PASTE

- Fit the projection of the starter motor case to the depression of the housing end.

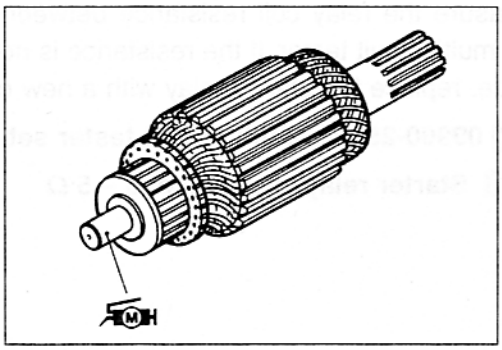

- Apply SUZUKI SUPER GREASE "A" to the O-ring.

99000-25030: SUZUKI SUPER GREASE "A" (For USA)
99000-25010: SUZUKI SUPER GREASE "A" (For the other countries)

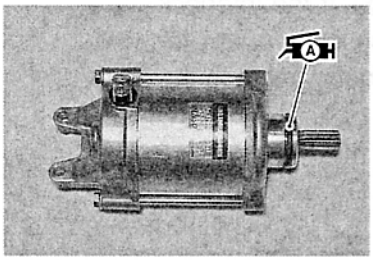

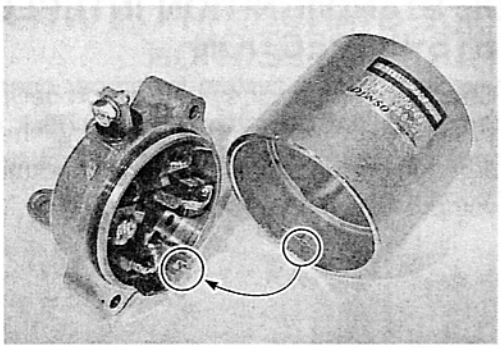

- Tighten the starter motor lead wire mounting nut to the specified torque.

Lead wire mounting nut: 3 N·m (0.3 kgf·m, 2.0 lb-ft)

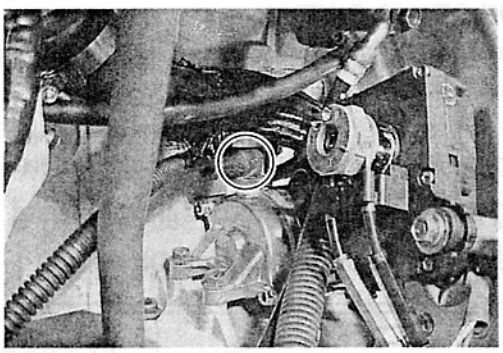

STARTER RELAY INSPECTION

- Remove the front seat. (☞6-6)
- Disconnect the battery ⊖ lead wire from the battery.
- Remove the starter relay cover.
- Disconnect the starter motor lead wire ①, battery lead wire ② and starter relay coupler ③.
- Remove the starter relay ④.

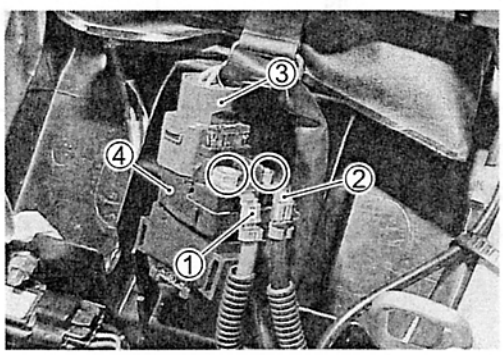

Apply 12 V to Ⓐ and Ⓑ terminals and check for continuity between the positive and negative terminals using the multi circuit tester. If the starter relay clicks and continuity is found, the relay is ok.

09900-25008: Multi circuit tester set

Tester knob indication: Continuity test (•)))

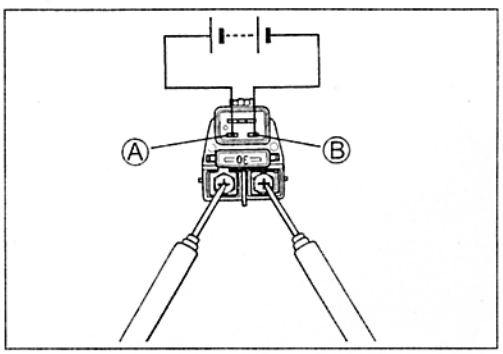

⚠ CAUTION

Do not apply a battery voltage to the starter relay for more than five seconds, since the relay coil may overheat and damaged.

Measure the relay coil resistance between the terminals using the multi circuit tester. If the resistance is not within the specified value, replace the starter relay with a new one.

09900-25008: Multi circuit tester set

Starter relay resistance: 3 – 5 Ω

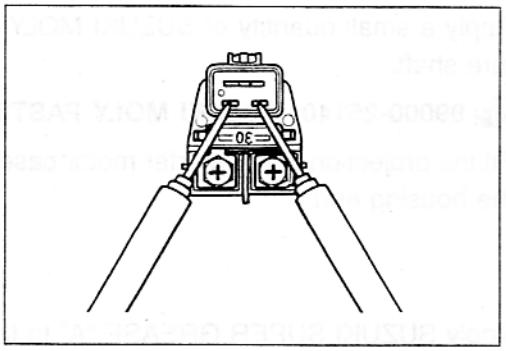

SIDE STAND/IGNITION INTERLOCK SYSTEM PARTS INSPECTION

Check the interlock system for proper operation. If the interlock system does not operate properly, check each component for damage or abnormalities. If any abnormality is found, replace the component with a new one.

SIDE-STAND SWITCH

The side-stand switch coupler is located upper the crankcase.

- Lift the fuel tank. (☞ 4-56)
- Disconnect the side-stand switch coupler and measure the voltage between Green and Black/White lead wires.

09900-25008: Multi circuit tester set

Tester knob indication: Diode test (⊣◀)

	Green (⊕ Probe)	Black/White (⊖ Probe)
ON (Side-stand up)	0.4–0.6 V	
OFF (Side-stand down)	More than 1.4 V (Tester's battery voltage)	

NOTE:

If the tester reads under 1.4V when the tester probes are not connected, replace its battery.

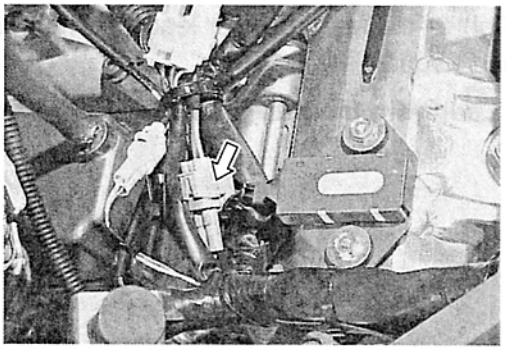

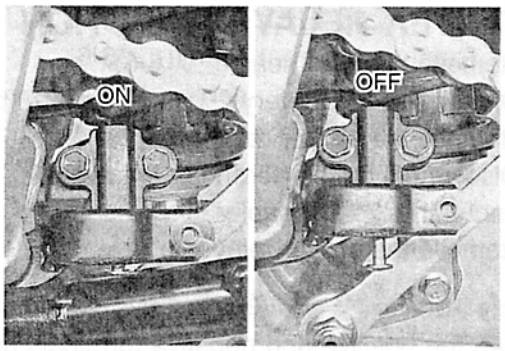

GEAR POSITION SWITCH

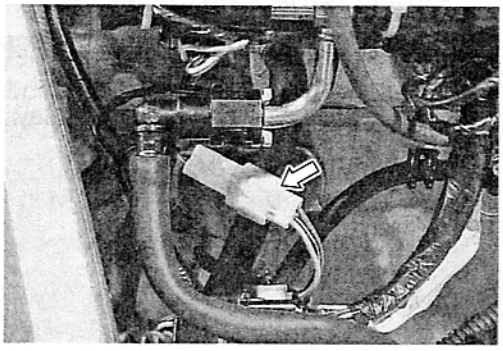

- Lift the fuel tank. (☞ 4-56)
- Disconnect the gear position switch coupler and check the continuity between Blue and Black/White with the transmission in "NEUTRAL".

TOOL 09900-25008: Multi circuit tester set

Tester knob indication: Continuity test (•))))

	Blue	Black/White
ON (Neutral)	○———	———○
OFF (Except neutral)		

⚠ CAUTION

When disconnecting and connecting the gear position switch coupler, make sure to turn OFF the ignition switch, or electronic parts may get damaged.

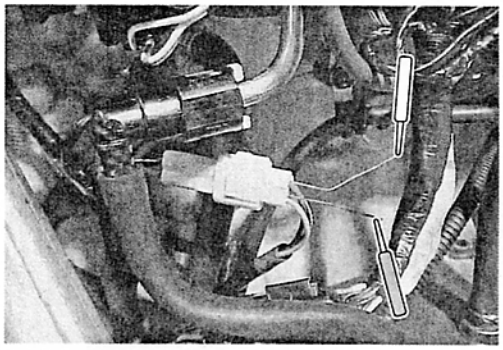

- Connect the gear position switch coupler to the wiring harness.
- Turn the ignition switch to "ON" position and side-stand to upright position.

Measure the voltage between Pink and Black/White lead wires using a multi circuit tester, when shifting the gearshift lever from low to top.

TOOL 09900-25008: Multi circuit tester set

Tester knob indication: Voltage (⎓)

DATA Gear position switch voltage: More than 0.6V
(* Low to top gear position / * Except neutral position) (Pink – B/W)

NOTE:

* *When connecting the multi circuit tester, install the copper wire (O.D is below 0.5 mm) to the back side of the lead wire coupler and connect the probes of tester to them.*
* *Use the copper wire, its outer diameter is below 0.5 mm, to prevent the rubber of the water proof coupler from damage.*

TURN SIGNAL/SIDE-STAND RELAY

The turn signal/side-stand relay is composed of the turn signal relay, and the side-stand relay and diode.

- Remove the turn signal/side-stand relay.

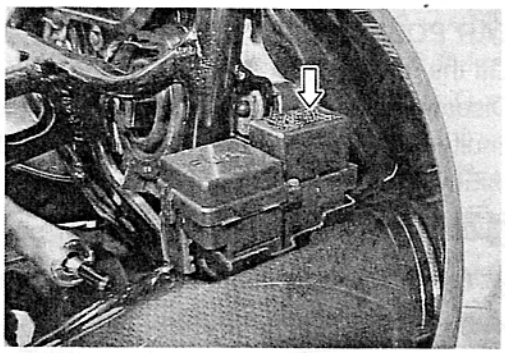

SIDE-STAND RELAY INSPECTION

First check the insulation between Ⓓ and Ⓔ terminals with the tester. Then apply 12V to terminals Ⓓ and Ⓒ (⊕ to Ⓓ and ⊖ to Ⓒ) and check the continuity between Ⓓ and Ⓔ. If there is no continuity, replace the turn signal/side-stand relay with a new one.

09900-25008: Multi circuit tester set

Tester knob indication: Continuity test (•)))

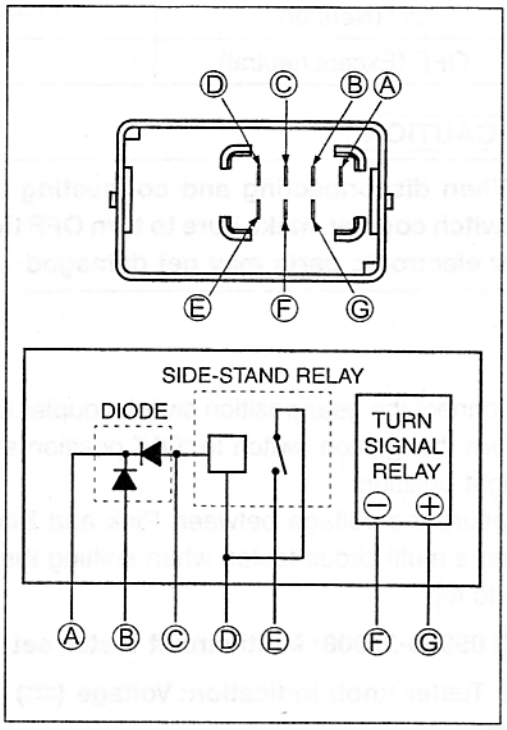

DIODE INSPECTION

Measure the voltage between the terminals using the multi circuit tester. Refer to the following table.

Unit: V

⊖ Probe of tester to:	⊕ Probe of tester to: Ⓒ,Ⓑ	⊕ Probe of tester to: Ⓐ
Ⓒ,Ⓑ		More than 1.4 V (Tester's battery voltage)
Ⓐ	0.4–0.6	

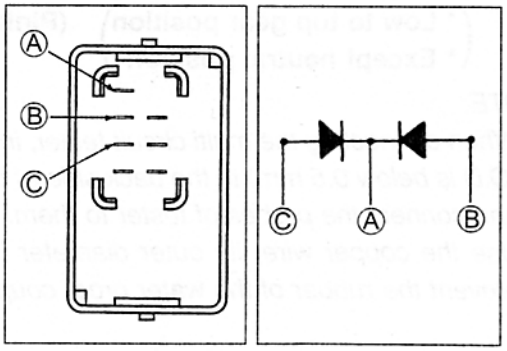

09900-25008: Multi circuit tester set

Tester knob indication: Diode test (⊣◀)

NOTE:

If the multi circuit tester reads under 1.4V when the tester probes are not connected, replace its battery.

IGNITION SYSTEM

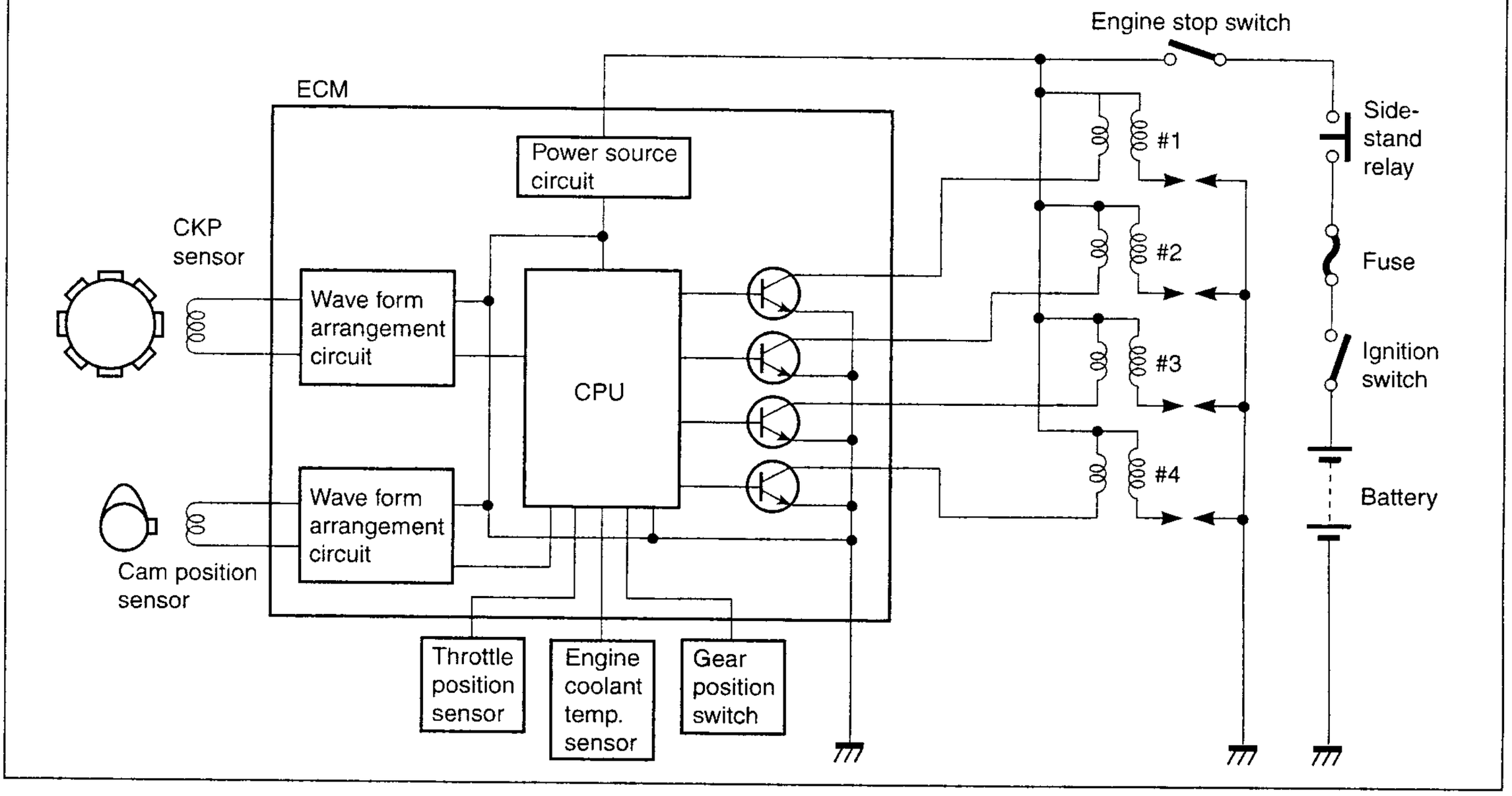

NOTE:

The ignition cut-off circuit is incorporated in this ECM to prevent over-running of engine. If engine rpm reaches 12 300 r/min., this circuit cuts off the ignition primary current for all spark plugs.

⚠ CAUTION

Under no load, the engine can run over 12 300 r/min, even if the ignition cut-off circuit is effective, and it may cause engine damage. Do not run the engine without load over 12 300 r/min at anytime.

TROUBLESHOOTING

No spark or poor spark

* Check that the transmission is in neutral and the engine stop switch is in the "RUN" position. Grasp the clutch lever. Check that the fuse is not blown and the battery is fully-charged before diagnosing.

Check the ignition system couplers for poor connections.

Looseness → • Poor connection of couplers

Correct

Continued on next page

Measure the battery voltage between input lead wires (O/W and B/W) at the ECM with the ignition switch in the "ON" position.

Incorrect →
- Faulty ignition switch
- Faulty turn signal/side-stand relay
- Faulty engine stop switch
- Broken wire harness or poor connection of related circuit couplers

Correct

Measure the ignition coil primary peak voltage. (☞ 7-19, -20)
NOTE: This inspection method is applicable only with the multi circuit tester and the peak volt adaptor.

Correct →

Inspect the spark plugs. (☞ 2-4)

Correct

Incorrect
- Faulty spark plug (-s)

Incorrect

- Poor connection of the ignition coil/plug cap (-s)

Inspect the ignition coil/plug caps. (☞ 7-20)

Incorrect →
- Faulty ignition coil/plug cap (-s)

Correct

Measure the crankshaft position sensor peak voltage and its resistance. (☞ 7-21, -22)
NOTE: The crankshaft position sensor peak voltage inspection is applicable only with the multi circuit tester and peak volt adaptor.

Incorrect →
- Faulty crankshaft position sensor

Correct

- Faulty ECM
- Poor connection of ignition couplers.

INSPECTION

IGNITION COIL PRIMARY PEAK VOLTAGE

- Remove the air cleaner box. (☞4-66)
- Disconnect all the ignition coil/plug cap lead wire couplers before removing the ignition coil/plug caps.
- Remove all of the ignition coil/plug caps.

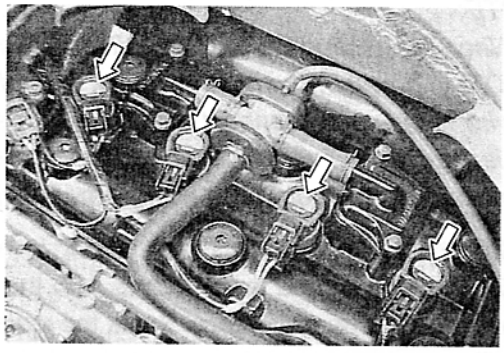

⚠ CAUTION

*** Do not remove the ignition coil/plug cap before disconnecting the lead wire coupler, or the lead wire will be damaged.**
*** Do not pry up the ignition coil/plug cap with a screwdriver or a bar to avoid damage.**
*** Be careful not to drop the ignition coil/plug cap as it may open or short in a circuit.**

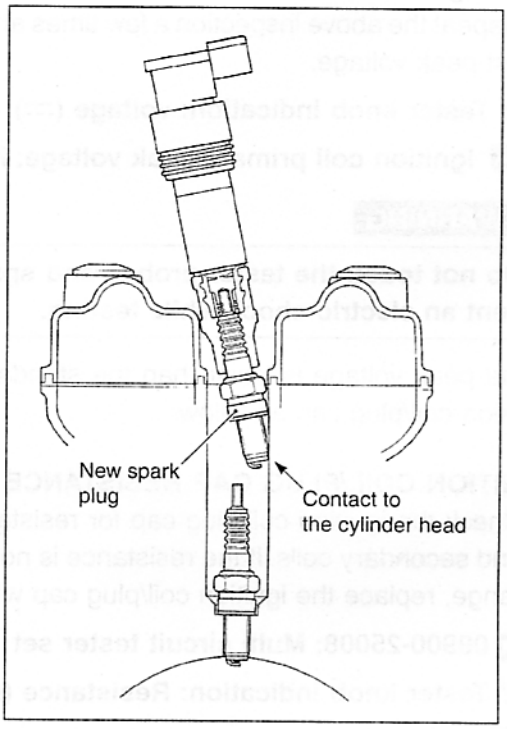

- Connect the new four spark plugs to each ignition coil/plug cap.
- Connect all the ignition coil/plug cap lead wire couplers to the ignition coil/plug caps respectively, and ground them on the cylinder head (each spark plug hole).

⚠ CAUTION

Avoid grounding the spark plugs and suppling the electrical shock to the cylinder head cover (magnesium parts) to prevent the magnesium material from damage.

NOTE:
Be sure that all couplers and spark plugs are connected properly and the battery used is in fully-charged condition.

Inspect each ignition coil primary peak voltage at the ignition coil/plug cap coupler.

- Connect the multi circuit tester with peak voltage adaptor as follows.

No.1 ignition coil/plug cap:
W/Bl terminal (⊕ Probe) – Ground (⊖ Probe) terminal
No.2 ignition coil/plug cap:
B terminal (⊕ Probe) – Ground (⊖ Probe) terminal
No.3 ignition coil/plug cap:
Y terminal (⊕ Probe) – Ground (⊖ Probe) terminal
No.4 ignition coil/plug cap:
G terminal (⊕ Probe) – Ground (⊖ Probe) terminal

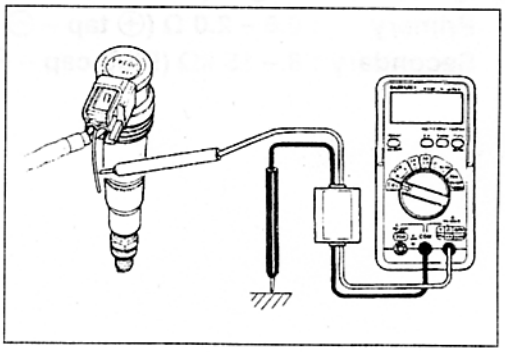

TOOL 09900-25008: Multi circuit tester set

⚠ CAUTION

Before using the multi circuit tester and peak volt adaptor, be sure to refer to the appropriate instruction manual.

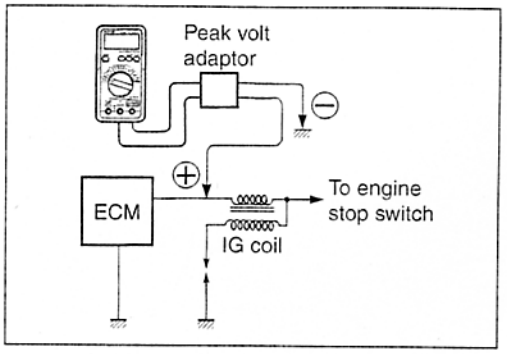

NOTE:

* *When connecting the multi circuit tester, insert the copper wires (O.D is below 0.5 mm) to the back side of the ignition coil lead wire coupler and connect the tester probes to them.*
* *Use the copper wire, its outer diameter being below 0.5 mm, to prevent the rubber of the water proof coupler from damage.*

- Shift the transmission into neutral and turn ignition switch "ON".
- Crank the engine a few seconds with the starter motor by depressing starter button and check the ignition coil primary peak voltage.
- Repeat the above inspection a few times and measure the highest peak voltage.

Tester knob indication: voltage (⎓)

DATA Ignition coil primary peak voltage: More than 80 V

⚠ WARNING

Do not touch the tester probes and spark plugs to prevent an electric shock while testing.

If the peak voltage is lower than the standard range, check the ignition coil/plug cap as follow.

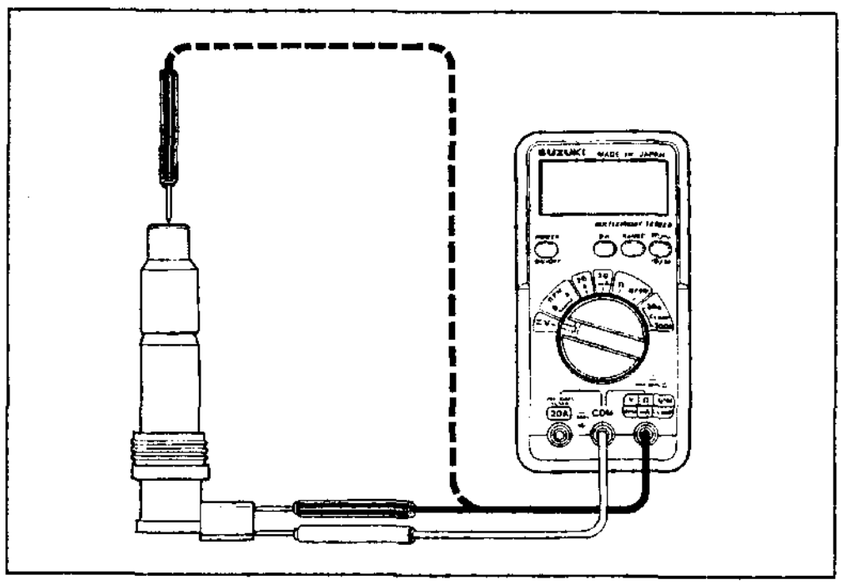

IGNITION COIL/PLUG CAP RESISTANCE

- Check the ignition coil/plug cap for resistance in both primary and secondary coils. If the resistance is not within the standard range, replace the ignition coil/plug cap with a new one.

TOOL 09900-25008: Multi circuit tester set

Tester knob indication: Resistance (Ω)

DATA Ignition coil/plug cap resistance
Primary : 0.8 – 2.0 Ω (⊕ tap – ⊖ tap)
Secondary : 8 – 15 kΩ (Plug cap – ⊖ tap)

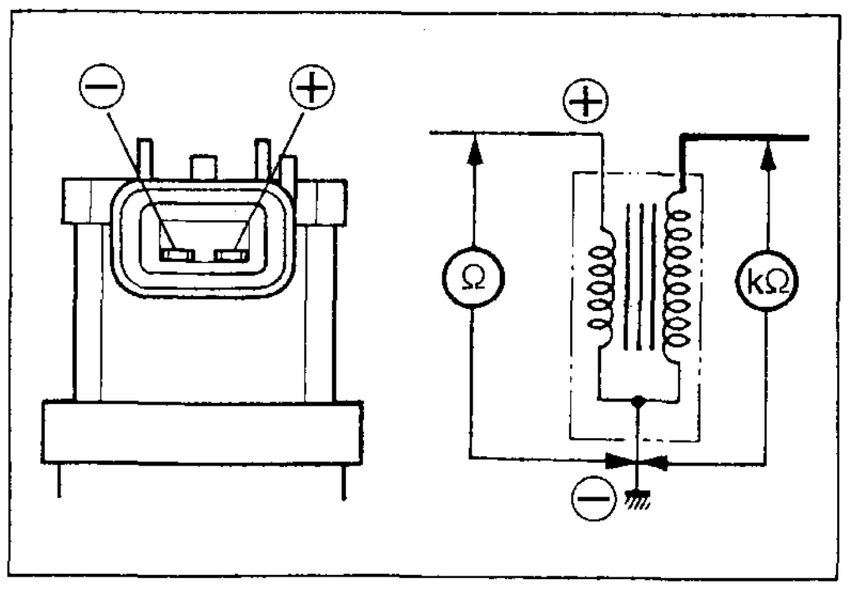

CKP SENSOR PEAK VOLTAGE

- Remove the front seat. (☞ 6-6)

NOTE:
Be sure that all couplers are connected properly and the battery used is in fully-charged condition.

- Connect the multi circuit tester with peak volt adaptor as follows.
- Measure the CKP sensor peak voltage between White and Green/White lead wires at the ECM coupler.

Green/White (⊕ Probe) – White (⊖ Probe)

TOOL 09900-25008: Multi circuit tester set

⚠ CAUTION

Before using the multi circuit tester and peak volt adaptor, be sure to refer to the appropriate instruction manual.

- Shift the transmission into the neutral and turn ignition switch "ON".
- Crank the engine a few seconds with the starter motor by depressing starter button and check the CKP sensor peak voltage.
- Repeat the above test procedure a few times and measure the highest peak voltage.

Tester knob indication: Voltage (⎓)

DATA CKP sensor peak voltage: More than 0.5 V (Green/White – White)

If the peak voltage is lower than the standard range, check the peak voltage at the CKP sensor lead wire coupler.

- Lift up the fuel tank. (☞ 4-56)
- Disconnect the CKP sensor lead wire coupler and connect the multi circuit tester with the peak volt adaptor.

Green (⊕ Probe) – Black (⊖ Probe)

- Measure the CKP sensor peak voltage at the CKP sensor lead wire coupler.

Tester knob indication: Voltage (⎓)

DATA CKP sensor peak voltage: More than 0.5 V (Green – Black)

If the peak voltage is lower than the standard range, check each coupler at both ends of the circuit or replace the CKP sensor and inspect it again.

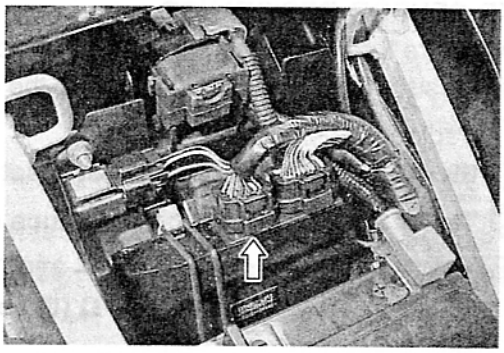

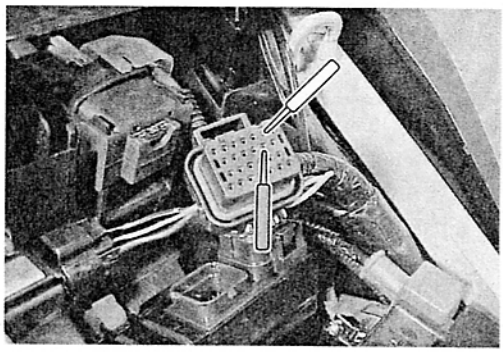

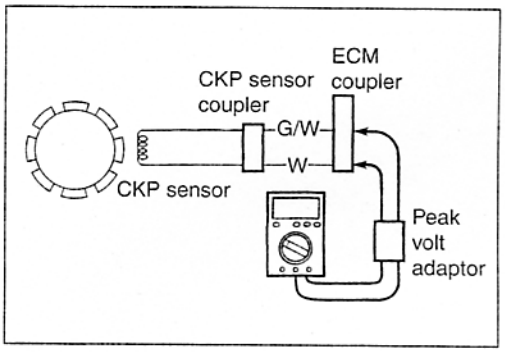

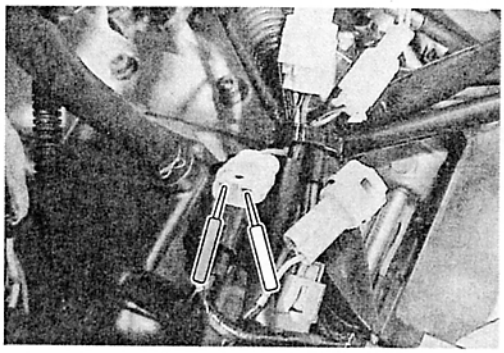

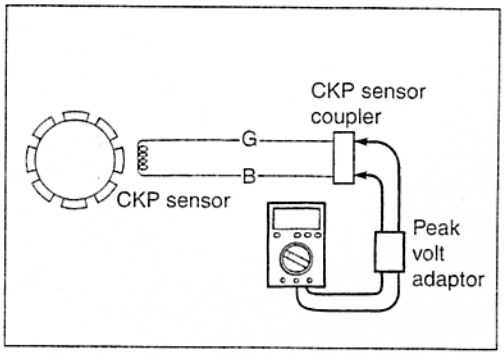

CKP SENSOR RESISTANCE

- Measure the resistance between the lead wires and ground. If the resistance is not specified value, the CKP sensor must be replaced.

TOOL 09900-25008: Multi circuit tester set

Tester knob indication: Resistance (Ω)

DATA CKP sensor resistance : 70 – 220 Ω (Green – Black)
: ∞ Ω (Green – Ground)

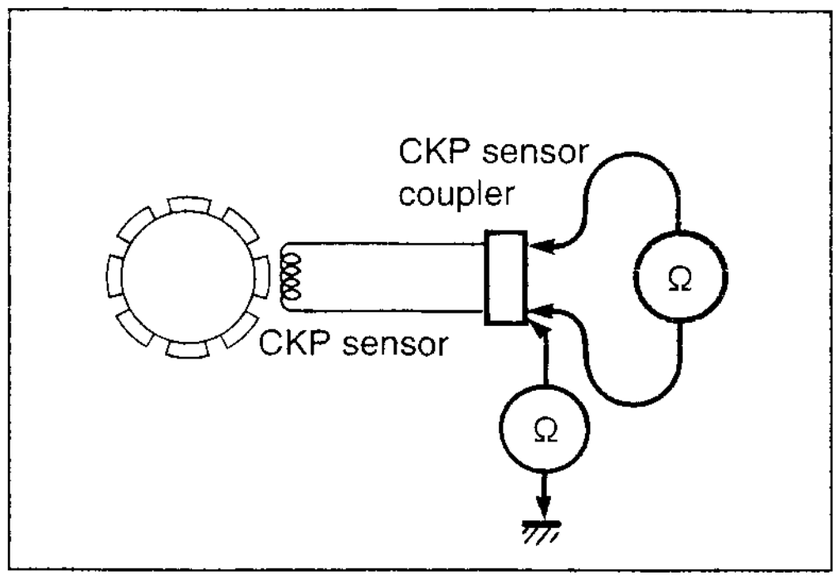

COMBINATION METER

DESCRIPTION

This combination meter mainly consists of the stepping motor, LCD (Liquid Crystal Display) and LED (Light Emitting Diode). This combination meter is light, thin and high response on those currently in use because of this composition.

The rpm pointer is driven by the stepping motor.

The LCDs indicate speed, Odo/Trip1/Trip2/Clock and engine coolant temp./FI respectively.

LED (Light Emitting Diode)

LED is used for the illumination light and each indicator light.

LED is maintenance free. LED is less consuming electric power and stronger to vibration resistance compared to the bulb.

Fuel indicator's LED light up immediately after turning the ignition switch on.

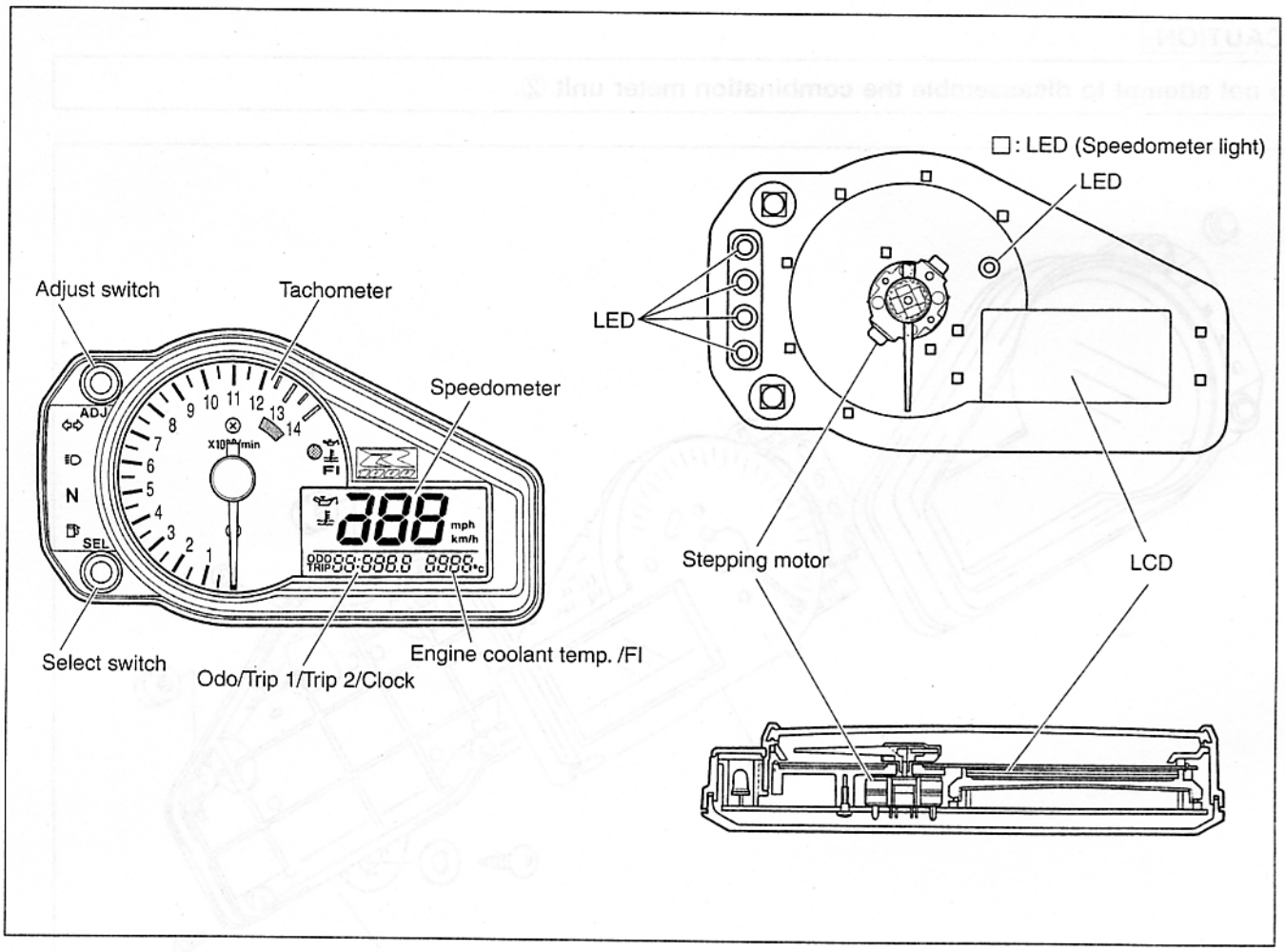

REMOVAL AND DISASSEMBLY

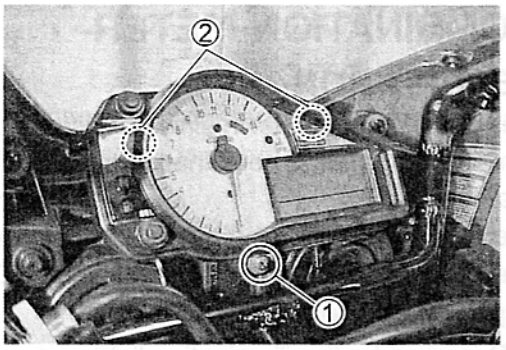

- Remove the screw ①.
- Draw out the hook ② from the body cowling.
- Disconnect the lead wire coupler.
- Remove the combination meter.

⚠ CAUTION

When disconnecting and connecting the combination meter coupler, make sure to turn OFF the ignition switch, or electronic parts may get damaged.

- Disassemble the combination meter as follows.

⚠ CAUTION

Do not attempt to disassemble the combination meter unit ②.

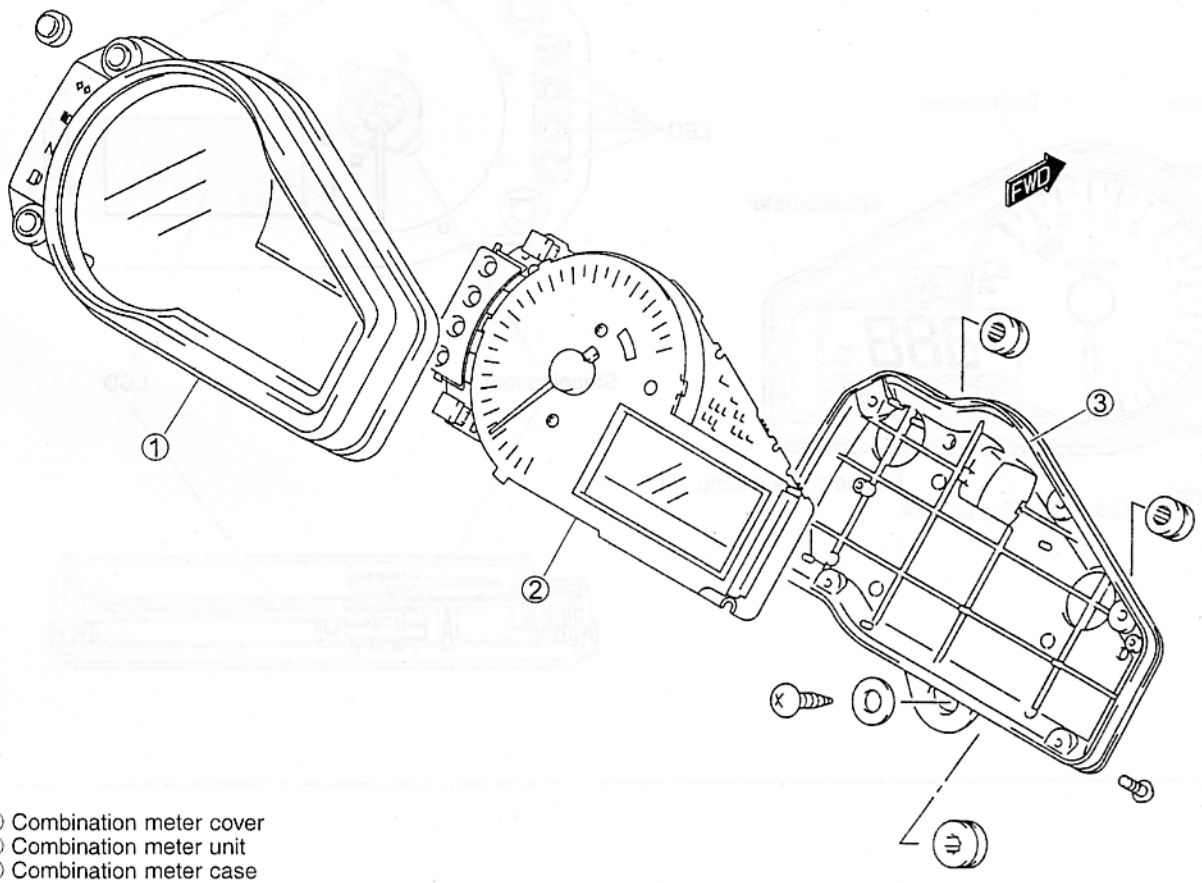

① Combination meter cover
② Combination meter unit
③ Combination meter case

INSPECTION

LED (LIGHT EMITTING DIODE)

Check that the LED lights immediately after turning the ignition switch on.
If the LED fails in operation, replace the combination meter unit with a new one after checking its wire harness/coupler.

STEPPING MOTOR

Check that the pointer calibrates itself immediately after turning the ignition switch on and stops at starting point.
If abnormal condition is found, replace the combination meter unit with a new one after checking its wire harness/coupler.

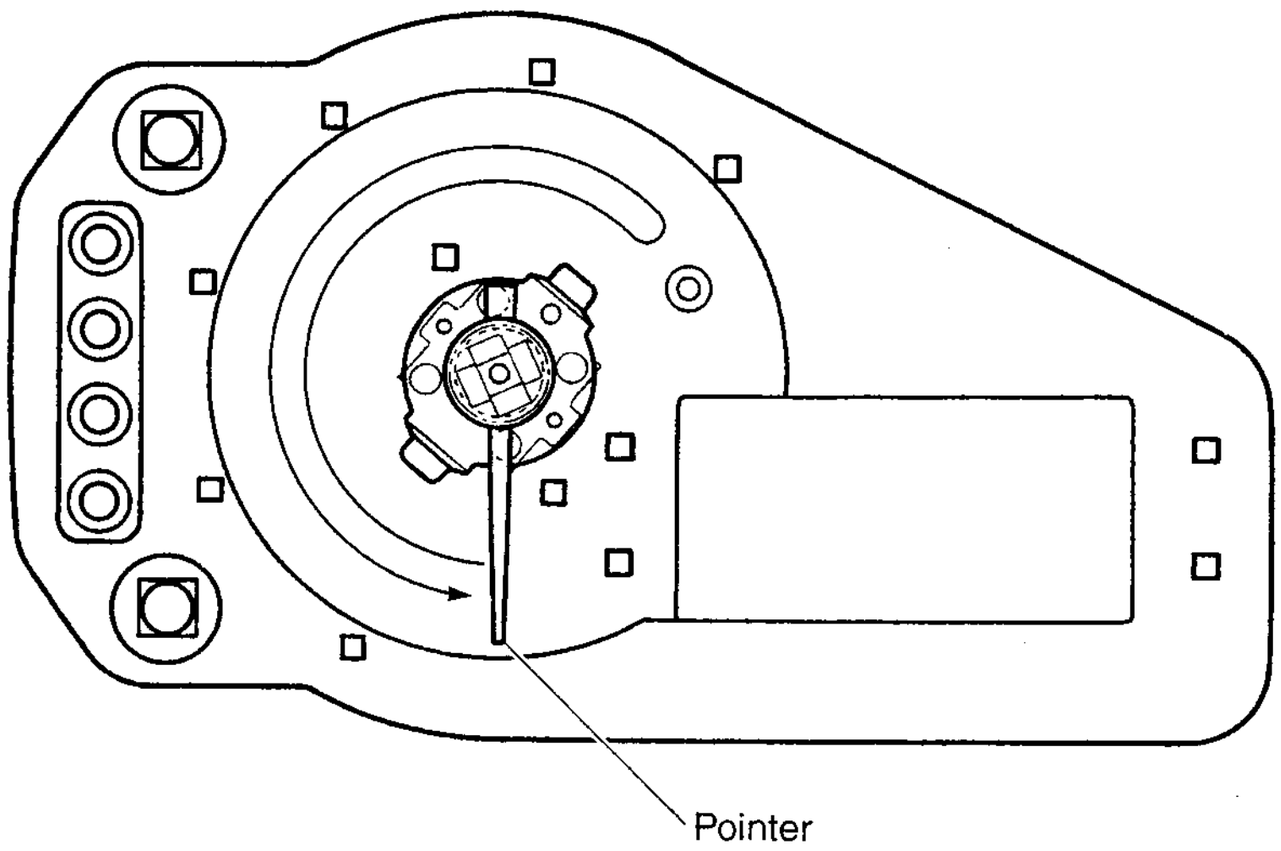

NOTE:
The pointer may not return to the proper position even turning the ignition switch on under low temperature condition. In that case, you can reset the pointer to the proper position by following the instruction below:

1) With the function switch Ⓐ pressed, turn the ignition switch on.
2) Release the function switch Ⓐ, 3 to 5 seconds after turning the ignition switch on.
3) Press the function switch Ⓐ twice (within 1 second). → Reset

* Complete the operation within 10 seconds after the ignition switch has been turned on.

Time	Ignition switch	Adjuster switch Ⓐ
	OFF	PUSH
0	ON	
•		
•		
3 sec		
•		
5 sec		Release
•		Push
•		
•		Push→Reset
•		
10 sec		

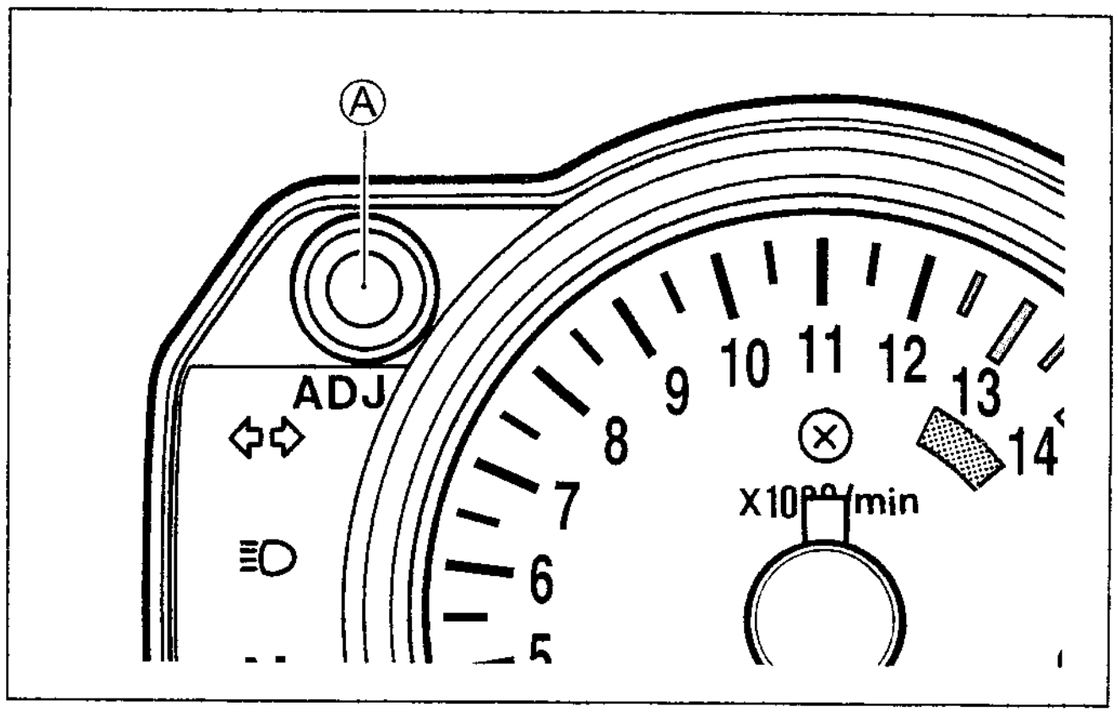

Pointer will return to the starting point right after the completion of the operation. In the case of the pointer not returning to the proper position after doing above, replace the combination meter unit.

ENGINE COOLANT TEMPERATURE METER AND INDICATOR

Engine coolant temp. sensor inspection. (☞ 5-8)

- Lift up the fuel tank. (☞ 4-56)
- Disconnect the engine coolant temperature sensor coupler ①.

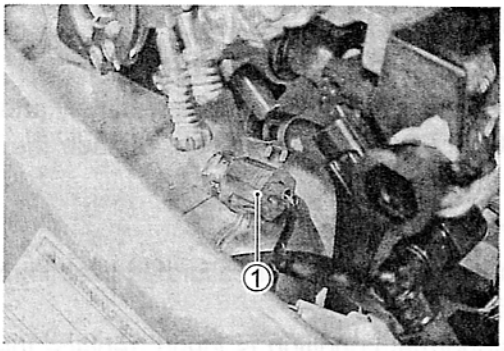

⚠ CAUTION

When connecting and disconnecting the engine coolant temp. sensor lead wire coupler, make sure to turn OFF the ignition switch, or electronic parts may get damaged.

- Connect the variable resistor Ⓐ between the terminals.
- Turn the ignition switch ON.
- Check the LCD and LED operations when the resistance is adjusted to the specified values.

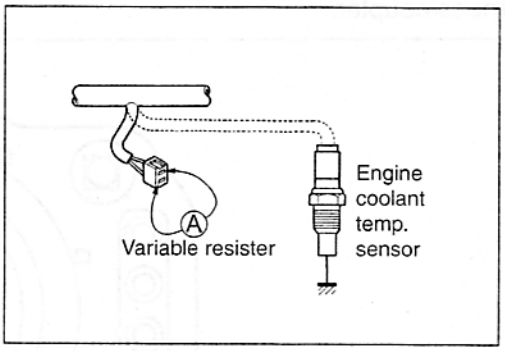

Resistance Ⓐ	LED Ⓑ	LCD Ⓒ	LCD Ⓓ	Water temperature
Over 2.45 kΩ	OFF	"---"	——	Under 19°C
Approx. 0.811 kΩ	OFF	"50"	——	Approx. 50 °C
Approx. 0.1 kΩ	ON	"120" - "139"	Flicker	120 – 139 °C
0 Ω (Jumper wire)	ON	"HI"	Flicker	Over 140 °C

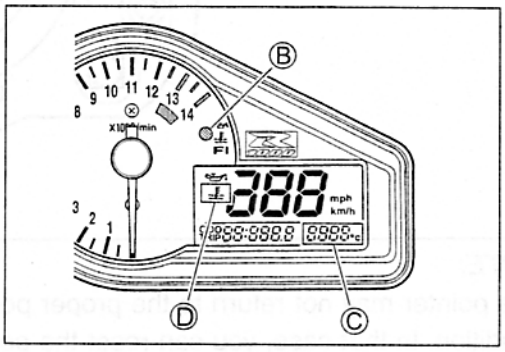

If either one or all indications are abnormal, replace the combination meter with a new one.

NOTE:

If the engine stop switch is turned OFF while the ignition switch is ON, the LCD displays "CHEC". But it is not malfunction.

This codition implies that combination meter recieves no signal from the ECM.

In that case, they are restored to ordinary indication by turning the engine stop switch RUN.

FUEL LEVEL INDICATOR SWITCH INSPECTION

- Remove and disassemble the fuel pump assembly. (☞4-61, 62)

- Connect 12 V battery and test bulb (12 V, 3.4 W) to the fuel level indicator switch as shown in the right illustlations. The bulb should come on after several seconds if the switch is in good condition.

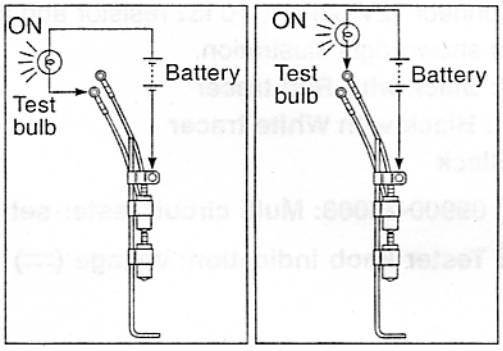

- When the switch is immersed in water under the above condition, the bulb should go out. If the bulb remains lit, replace the unit with a new one.

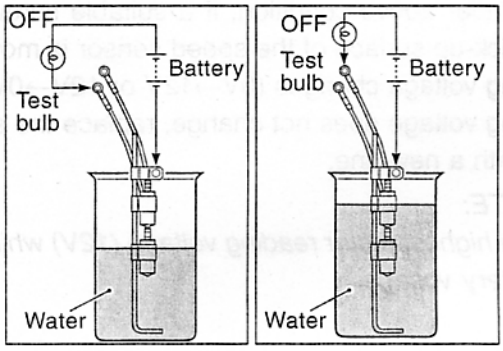

FUEL LEVEL INDICATOR LIGHT INSPECTION

If the fuel level indicator light does not function properly, check the fuel level indicator switch and its lead wire/coupler.
If the fuel level indicator switch and its lead wire/coupler are all right, replace the combination meter with a new one.

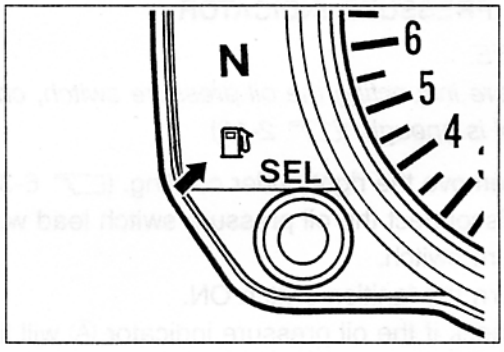

FUEL LEVEL RESISTOR INSPECTION

- Measure the resistance between the terminals of each fuel level resistor. If the resistance is not within the standard range, replace the resistor with a new one.

RED – BLACK, RED – WHITE

TOOL 09900-25008: Multi circuit tester set

Tester knob indication: Resistance (Ω)

DATA Fuel level resistor resistance: 66.5 – 73.5 Ω

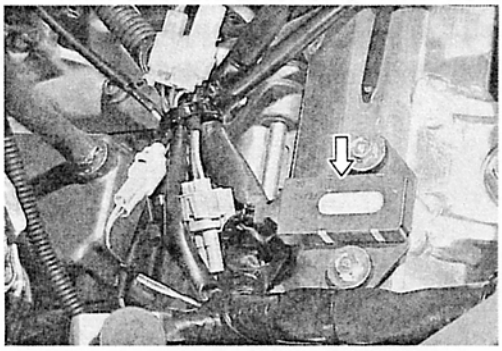

SPEEDOMETER

If the speedometer, odometer or trip meter does not function properly, inspect the speedometer sensor and connection of couplers. If the speedometer sensor and connection are all right, replace the meter with a new one.

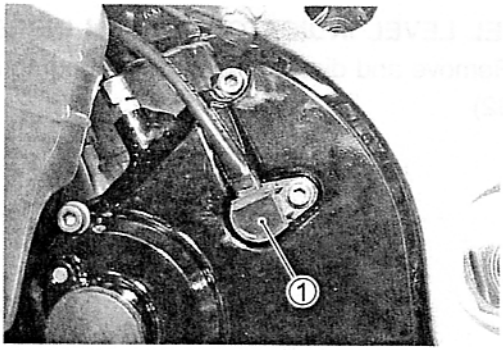

SPEEDOMETER SENSOR

- Remove the left under cowling. (☞6-3)
- Disconnect speedometer sensor coupler.
- Remove the speedometer sensor ① by removing its mounting bolt.
- Connect 12V battery, 10 kΩ resistor and the multi circuit tester as shown right illustration.

B/R: Black with Red tracer
B/W: Black with White tracer
B: Black

TOOL 09900-25008: Multi circuit tester set

Tester knob indication: Voltage (⎓)

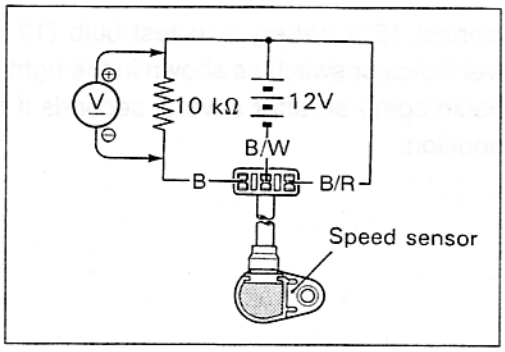

- Under above condition, if a suitable screwdriver touching the pick-up surface of the speed sensor is moved, the tester reading voltage changes (0V→12V or 12V→0V). If the tester reading voltage does not change, replace the speedometer sensor with a new one.

NOTE:
The highest tester reading voltage (12V) while testing is same as battery voltage.

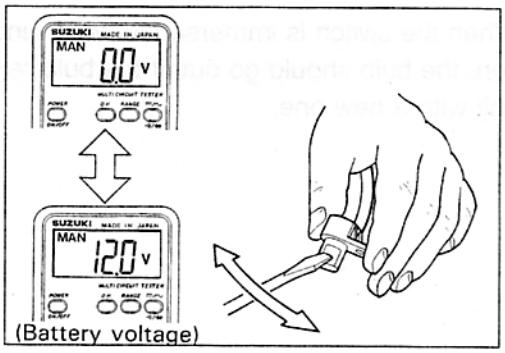

OIL PRESSURE INDICATOR

NOTE:
Before inspecting the oil pressure switch, check if the engine oil level is enough. (☞ 2-12)

- Remove the right under cowling. (☞ 6-3)
- Disconnect the oil pressure switch lead wire from the oil pressure switch.
- Turn the ignition switch ON.
- Check if the oil pressure indicator Ⓐ will light and LCD Ⓑ will flicker, when grounding the lead wire.

If each indication are abnormal, replace the combination meter with a new one after checking connection of couplers.

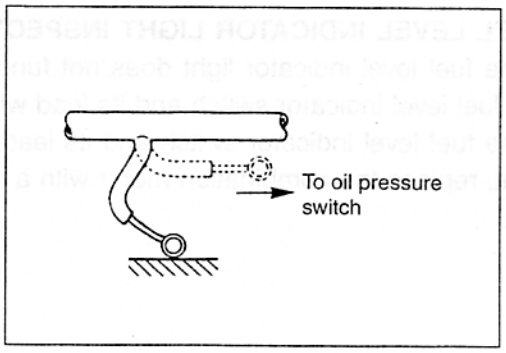

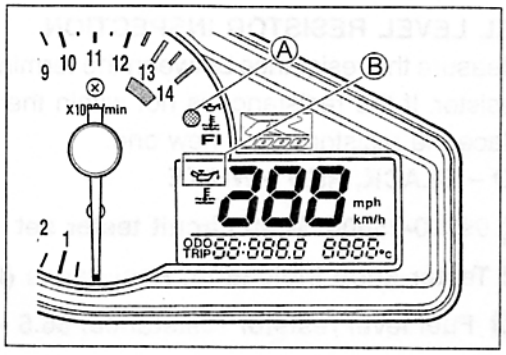

LAMPS

HEADLIGHT, BRAKE LIGHT/TAILLIGHT AND TURN SIGNAL LIGHT

HEADLIGHT ①
12 V 60/55 W (H4) × 2 ..... For E-03, 24, 28, 33
12 V 55 + 55/55 W (H7) ..... For the other countries

POSITION LIGHT
12 V 5 W ② (Except for E-03, 24, 28, 33)

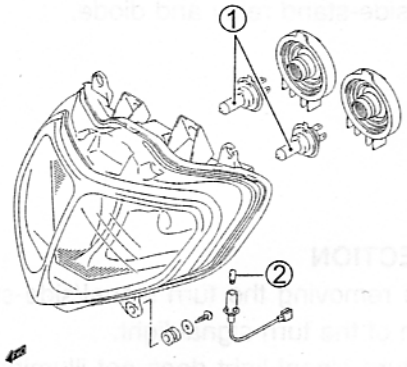

BRAKE LIGHT/TAILLIGHT ③
12 V 21/5 W × 2

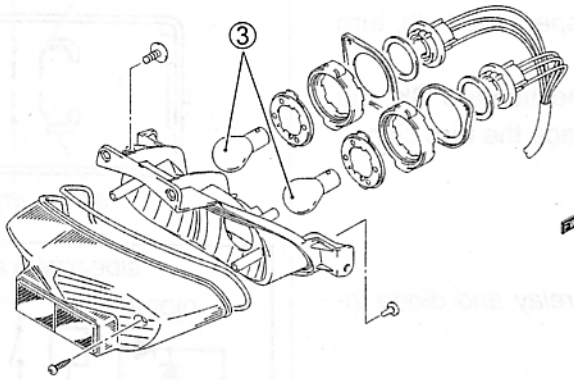

TURN SIGNAL LIGHT ④
12 V 21 W × 4

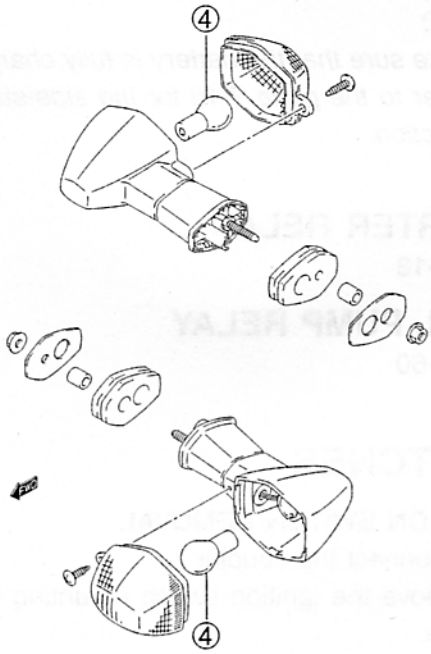

⚠ CAUTION

If you touch the bulb with your bare hands, clean it with a cloth moistened with alcohol or soapy water to prevent early failure.

HEADLIGHT BEAM ADJUSTMENT

- Remove the body cowling cover. (☞6-3)
- Adjust the headlight beam by using a screw driver ⊕, both vertical and horizontal.
  Ⓐ: Vertical adjuster
  Ⓑ: Horizontal adjuster

NOTE:
To adjust the headlight beam, adjust the beam horizontally first, then adjust the vertically.

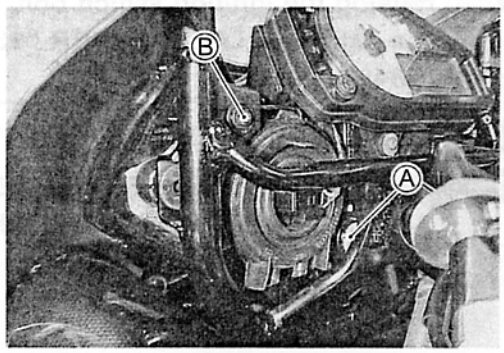

RELAYS

TURN SIGNAL/SIDE-STAND RELAY

The turn signal/side-stand relay is composed of the turn signal relay, side-stand relay and diode.

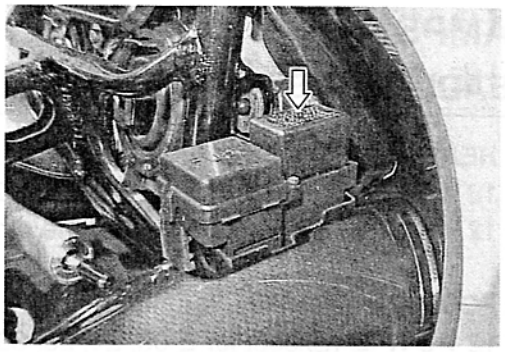

INSPECTION

Before removing the turn signal/side-stand relay, check the operation of the turn signal light.

If the turn signal light does not illuminate, inspect the bulb, turn signal switch and circuit connection.

If the bulb, turn signal switch and circuit connection are OK, the turn signal relay may be faulty; therefore, replace the turn signal/side-stand relay with a new one.

NOTE:

* *Make sure that the battery is fully charged.*
* *Refer to the page 7-16 for the side-stand relay and diode inspection.*

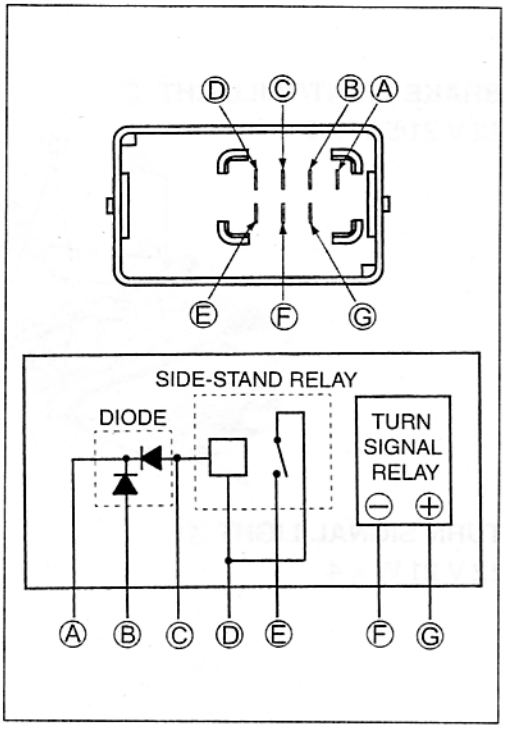

STARTER RELAY

☞7-13

FUEL PUMP RELAY

☞4-60

SWITCHES

IGNITION SWITCH REMOVAL

- Disconnect the coupler.
- Remove the ignition switch mounting bolts using the special tools.

TOOL 09930-11920: Torx bit JT40H
09930-11940: Bit holder

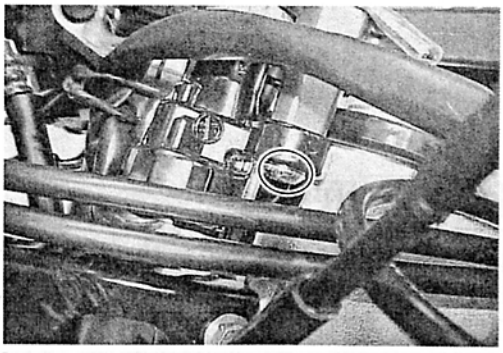

⚠ CAUTION

When reusing the ignition switch bolt, clean thread and apply the THREAD LOCK SUPER "1322" or THREAD LOCK "1342".

1342 99000-32050: THREAD LOCK "1342" (For USA)

1322 99000-32110: THREAD LOCK SUPER "1322" (For the other countries)

Inspect each switch for continuity with a tester. If any abnormality is found, replace the respective switch assemblies with new ones.

IGNITION SWITCH

(For E-24)

Position \ Color	R	O	O/Y	B/W
ON	○——	——○	○——	——○
OFF				
LOCK				

(For Others)

Position \ Color	R	O	O/Y	B/W	Gr	Br
ON	○——	——○	○——	——○	○——	——○
OFF						
LOCK						
P	○——	————	————	————	————	——○

LIGHTING SWITCH

(Except for E-03, 24, 28 and 33)

Position \ Color	O/Bl	Gr	O/R	Y/W
OFF (•)				
S (≡00≡)	○——	——○		
ON (☼)	○——	——○	○——	——○

DIMMER SWITCH

Position \ Color	W	Y	Y/W
HI (≡D)		○——	——○
LO (≡D)	○——	————	——○

TURN SIGNAL SWITCH

Position \ Color	Lg	Lbl	B
L		○——	——○
PUSH			
R	○——	——○	

PASSING LIGHT SWITCH

(Except for E-03, 28 and 33)

Position \ Color	O/R	Y
•		
PUSH	○——	——○

ENGINE STOP SWITCH

Position \ Color	O/B	O/W
OFF (⊗)		
RUN (○)	○——	——○

STARTER BUTTON

Position \ Color	O/W	Y/G
•		
PUSH	○——	——○

HORN BUTTON

Position \ Color	B/Bl	B/W
•		
PUSH	○——	——○

FRONT BRAKE SWITCH

Position \ Color	B	Y/G
OFF		
ON	○——	——○

REAR BRAKE SWITCH

Position \ Color	O/G	W/B
OFF		
ON	○——	——○

CLUTCH LEVER POSITION SWITCH

Position \ Color	B/Y	B/Y
OFF		
ON	○——	——○

OIL PRESSURE SWITCH

Position \ Color	G/Y	Ground
ON (engine is stopped)	○——	——○
OFF (engine is running)		

NOTE:

Before inspecting the oil pressure switch, check if the engine oil level is enough. (☞ 2-12)

WIRE COLOR

B : Black
Br : Brown
Gr : Gray
B/Bl : Black with Blue tracer
B/W : Black with White tracer
B/Y : Black with Yellow tracer
B/R : Black with Red tracer
G/Y : Green with Yellow tracer
O/B : Orange with Black tracer
O/Bl : Orange with Blue tracer
O/G : Orange with Green tracer
O/R : Orange with Red tracer
O/W : Orange with White tracer
O/Y : Orange with Yellow tracer
W/B : White with Black tracer
Y/G : Yellow with Green tracer
Y/W : Yellow with White tracer

Lbl : Light blue
Lg : Light green
O : Orange

R : Red
Y : Yellow
W : White

BATTERY

SPECIFICATIONS

Type designation	FTX12-BS
Capacity	12V, 36 kC (10 Ah)/10HR

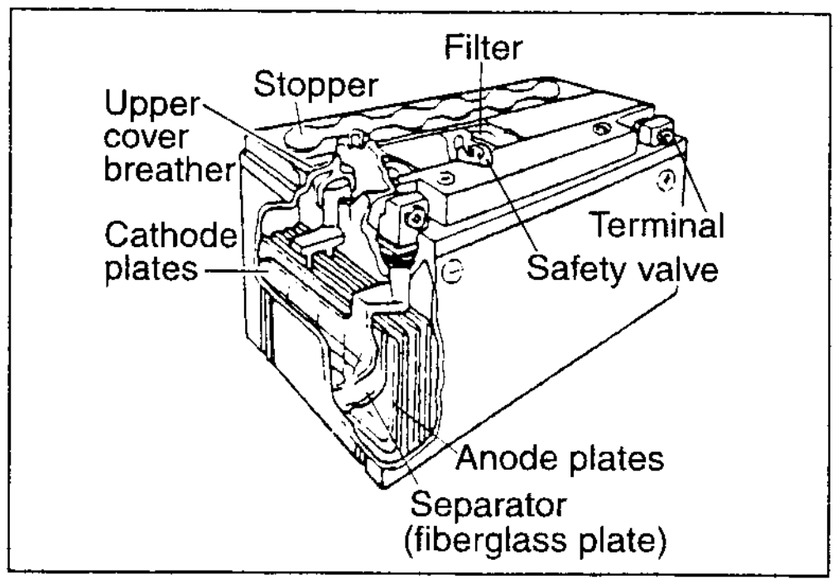

INITIAL CHARGING

Filling electrolyte

- Remove the aluminum tape ① sealing the battery electrolyte filler holes.

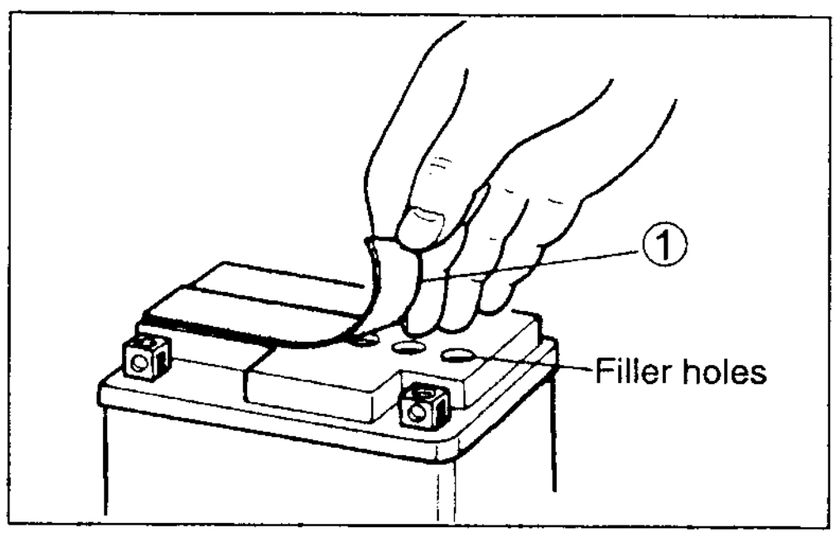

- Remove the caps ②.

NOTE:

* *After filling the electrolyte completely, use the removed cap ② as the sealed caps of battery-filler holes.*

* *Do not remove or pierce the sealed areas ③ of the electrolyte container.*

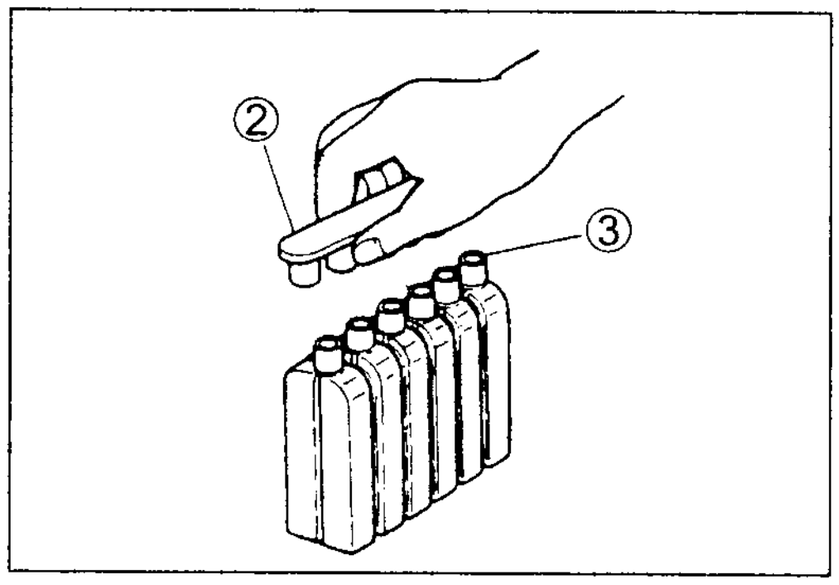

- Insert the nozzles of the electrolyte container into the battery's electrolyte filler holes, holding the container firmly so that it does not fall. Take precaution not to allow any of the fluid to spill.

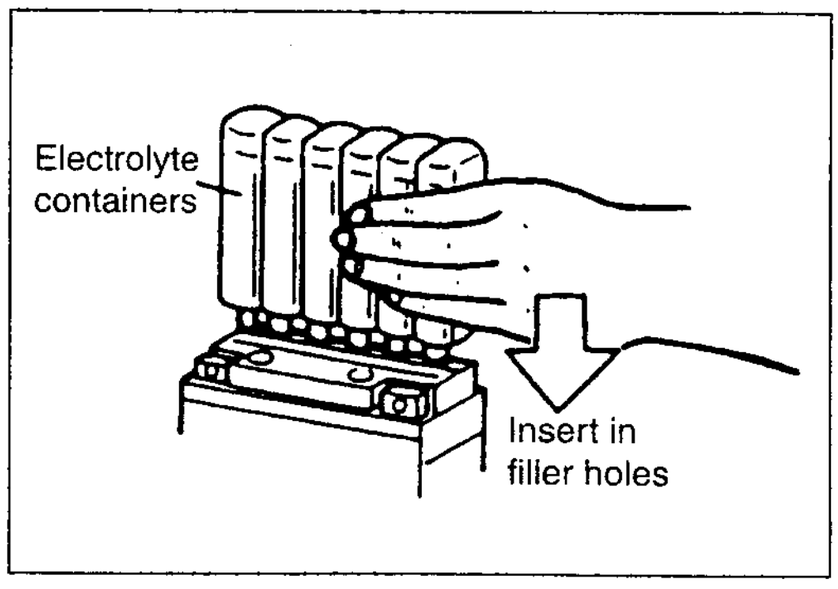

- Make sure air bubbles are coming up each electrolyte container, and leave in this position for about more than 20 minutes.

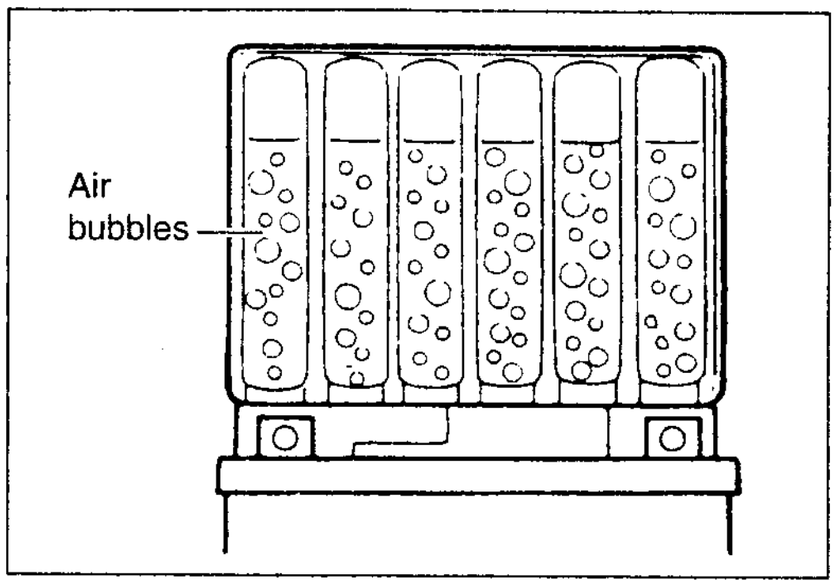

NOTE:
If no air bubbles are coming up from a filler port, tap the bottom of the electrolyte container two or three times.
Never remove the container from the battery.

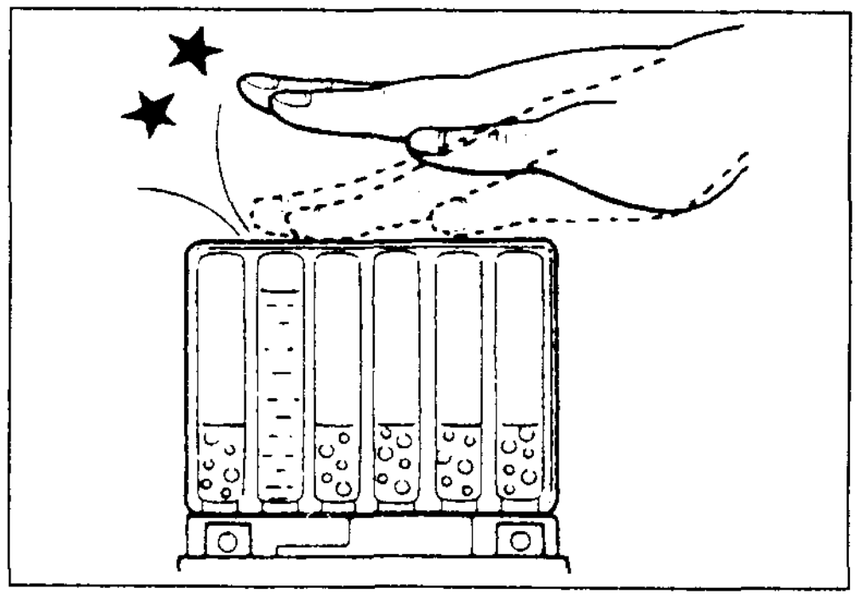

- After confirming that the electrolyte has entered the battery completely, remove the electrolyte containers from the battery. Wait for around 20 minutes.
- Insert the caps into the filler holes, pressing in firmly so that the top of the caps do not protrude above the upper surface of the battery's top cover.

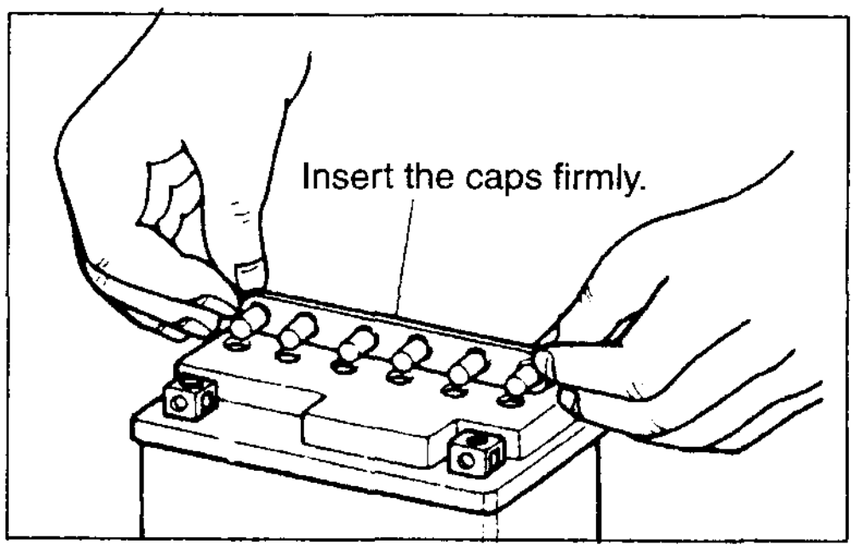

⚠ CAUTION

*** Never use anything except the specified battery.**
*** Once install the caps to the battery; do not remove the caps.**
*** Do not tap the caps with a hammer when installing them.**

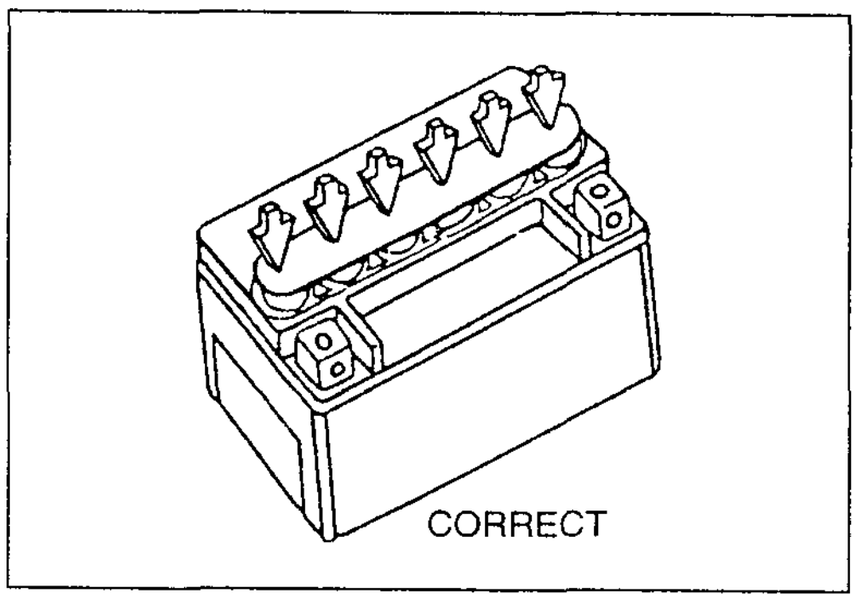

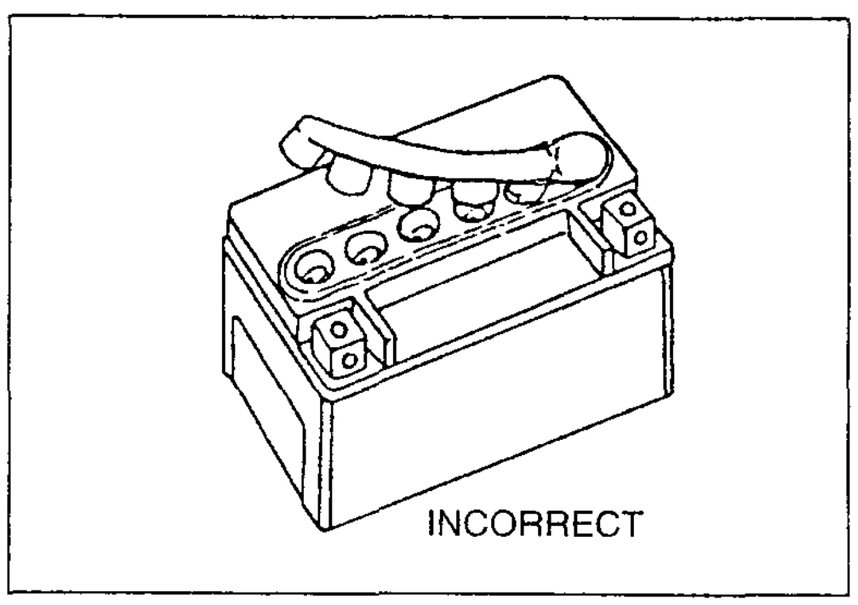

- Using multi circuit tester, measure the battery voltage. The tester should indicate more than 12.5 – 12.6V (DC) as shown in the Fig. If the battery voltage is lower than the specification, charge the battery with a battery charger. (Refer to the recharging operation)

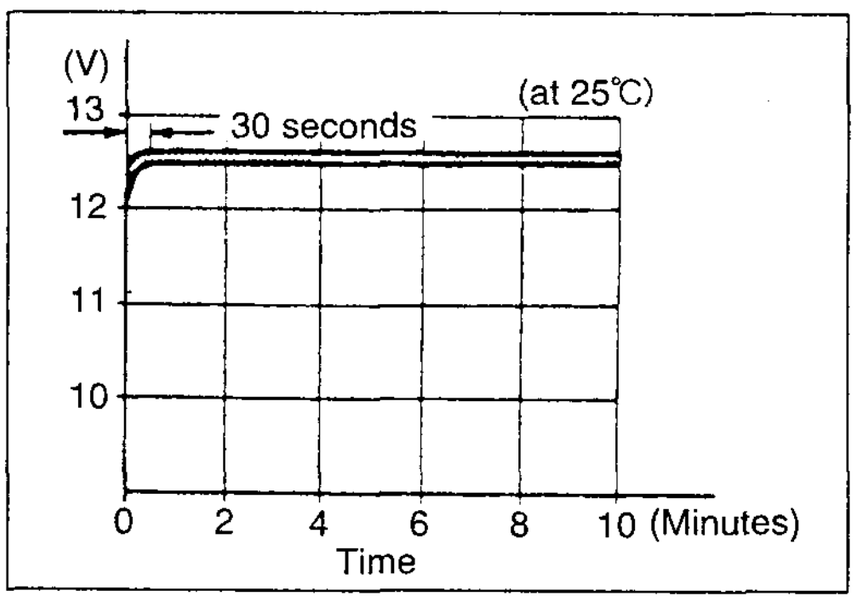

⚠ CAUTION

Do not remove the caps on the battery top while charging.

NOTE:
Initial charging for a new battery is recommended if two years have passed since the date of manufacture.

SERVICING

Visually inspect the surface of the battery container. If any signs of cracking or electrolyte leakage from the sides of the battery have occurred, replace the battery with a new one. If the battery terminals are found to be coated with rust or an acidic white powdery substance, then this can be cleaned away with sandpaper.

RECHARGING OPERATION

- Using the multi circuit tester, check the battery voltage. If the voltage reading is less than the 12.0V (DC), recharge the battery with a battery charger.

⚠ CAUTION

*** When recharging the battery, remove the battery from the motorcycle.**
*** Do not remove the caps on the battery top while recharging.**

Recharging time: 5 A for 1 hour or 1.2 A for 5 to 10 hours

⚠ CAUTION

Be careful not to permit the charging current to exceed 5A at any time.

- After recharging, wait for more than 30 minutes and check the battery voltage with a multi circuit tester.
- If the battery voltage is less than the 12.5V, recharge the battery again.
- If battery voltage is still less than 12.5V, after recharging, replace the battery with a new one.
- When the motorcycle is not used for a long period, check the battery every 1 month to prevent the battery discharge.

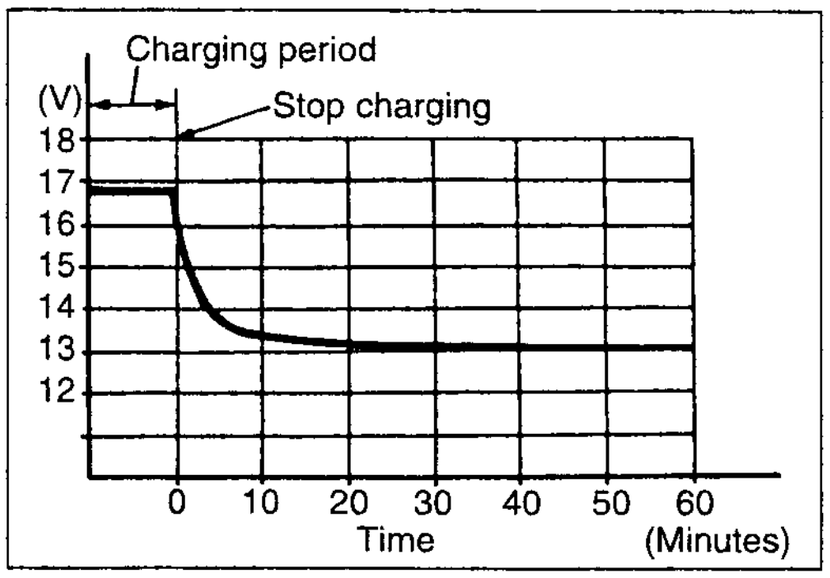

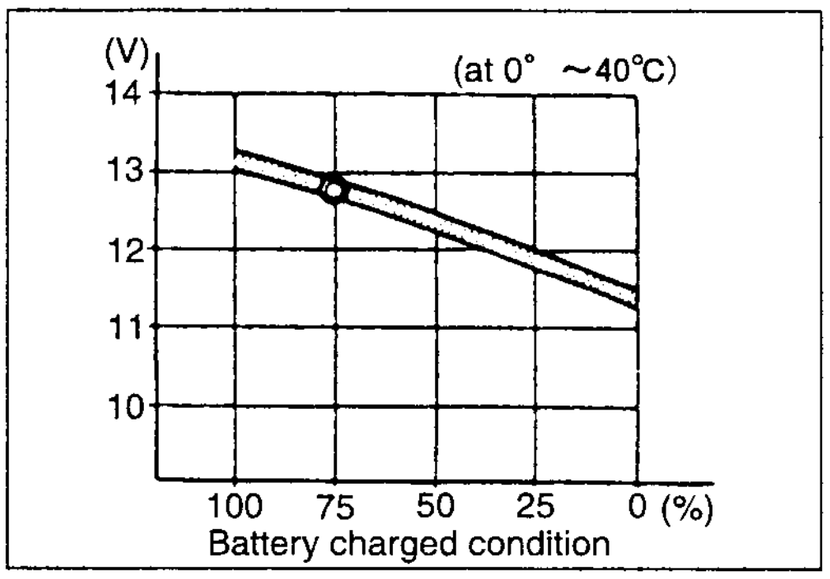

SERVICING INFORMATION

CONTENTS

TROUBLESHOOTING 8- 2
FI SYSTEM MALFUNCTION CODE AND DEFECTIVE CONDITION 8- 2
ENGINE 8- 4
RADIATOR (COOLING SYSTEM) 8- 9
CHASSIS 8-10
BRAKES 8-11
ELECTRICAL 8-12
BATTERY 8-13
WIRE HARNESS, CABLE AND HOSE ROUTING 8-14
WIRE HARNESS ROUTING 8-14
CABLE ROUTING 8-17
FUEL TANK DRAIN HOSE ROUTING 8-18
COOLING SYSTEM HOSE ROUTING 8-19
FRONT BRAKE HOSE ROUTING 8-20
REAR BRAKE HOSE ROUTING 8-21
PAIR (AIR SUPPLY) SYSTEM HOSE ROUTING 8-22
FUEL TANK SET-UP 8-23
COWLING SET-UP 8-24
FRAME COVER SET-UP 8-25
SIDE-STAND SET-UP 8-26
GEARSHIFT PEDAL SET-UP 8-26
SEAT LOCK CABLE ROUTING 8-27
FRONT FENDER SET-UP 8-27
SPECIAL TOOLS 8-28
TIGHTENING TORQUE 8-31
SERVICE DATA 8-35

TROUBLESHOOTING

FI SYSTEM MALFUNCTION CODE AND DEFECTIVE CONDITION

MALFUNCTION CODE	DETECTED ITEM	DETECTED FAILURE CONDITION CHECK FOR
c00	NO FAULT	———
c11	Camshaft position sensor	The signal does not reach ECM for more than 4 sec. after receiving the starter signal. The camshaft position sensor wiring and mechanical parts. (Camshaft position sensor, intake cam pin, wiring/coupler connection)
c12	Crankshaft position sensor	The signal does not reach ECM for more than 4 sec. after receiving the starter signal. The crankshaft position sensor wiring and mechanical parts. (Crankshaft position sensor, wiring/coupler connection)
c13	Intake air pressure sensor	The sensor should produce following voltage. (0.5 V ≦ sensor voltage < 4.85 V) Without the above range, c13 is indicated. Intake air pressure sensor, wiring/coupler connection.
c14	Throttle position sensor	The sensor should produce following voltage. (0.2 V ≦ sensor voltage < 4.8 V) Without the above range, c14 is indicated. Throttle position sensor, wiring/coupler connection.
c15	Engine coolant temperature sensor	The sensor voltage should be the following. (0.15 V ≦ sensor voltage < 4.85 V) Without the above range, c15 is indicated. Engine coolant temperature sensor, wiring/coupler connection.
c21	Intake air temperature sensor	The sensor voltage should be the following. (0.15 V ≦ sensor voltage < 4.85 V) Without the above range, c21 is indicated. Intake air temperature sensor, wiring/coupler connection.
c22	Atmospheric pressure sensor	The sensor voltage should be the following. (0.5 V ≦ sensor voltage < 4.85 V) Without the above range, c22 is indicated. Atm. pressure sensor, wiring/coupler connection.
c23	Tip over sensor	The sensor voltage should be less than the following for more than 3 sec. after ignition switch turns ON. (sensor voltage < 4.85 V) Without the above value, c23 is indicated. Tip over sensor, wiring/coupler connection.
c24, c25, c26 or c27	Ignition signal	Crankshaft position sensor (pick-up coil) signal is produced but signal from ignition coil is interrupted continuous by two times or more. In this case, the code c24, c25, c26 or c27 is indicated. Ignition coil, wiring/coupler connection, power supply from the battery.

c28	Secondary throttle valve actuator	When no actuator control signal is supplied from ECM or communication signal does not reach ECM or operation voltage does not reach STVA motor, c28 is indicated. STVA can not operate.
		STVA lead wire/coupler.
c29	Secondary throttle position sensor	The sensor should produce following voltage. (0.2 V ≦ sensor voltage < 4.8 V) Without the above range, c29 is indicated.
		Secondary throttle position sensor, wiring/coupler connection.
c31	Gear position signal	Gear position signal voltage should be higher than the following for more than 3 seconds. (Gear position sensor voltage > 0.60 V) Without the above value, c31 is indicated.
		Gear position sensor, wiring/coupler connection. Gearshift cam etc.
c32, c33, c34 or c35	Fuel injector signal	When fuel injection signal stops, the c32, c33, c34 or c35 is indicated.
		Injector, wiring/coupler connection, power supply to the injector.
c41	Fuel pump relay signal	When no signal is supplied from fuel pump relay, c41 is indicated.
		Fuel pump relay, connecting lead, power source to fuel pump relay.
c42	Ignition switch signal	Ignition switch signal is not input in the ECM.
		Ignition switch, lead wire/coupler.
c46	Exhaust control valve actuator	EXCVA position sensor produces following voltage. (0.2 V ≦ sensor voltage < 4.8 V) Without the above value, c46 is indicated. EXCVA motor can not move.
		EXCVA, EXCVA adjustment, lead wire/coupler

ENGINE

Complaint	Symptom and possible causes	Remedy
Engine will not start, or is hard to start.	**Compression too low**	
	1. Out of adjustment valve clearance.	Adjust.
	2. Worn valve guides or poor seating of valves.	Repair or replace.
	3. Mistiming valves.	Adjust.
	4. Excessively worn piston rings.	Replace.
	5. Worn-down cylinder bores.	Replace.
	6. Too slowly starter motor cranks.	See electrical section.
	7. Poor seating of spark plugs.	Retighten.
	Plugs not sparking	
	1. Fouled spark plugs.	Clean.
	2. Wet spark plugs.	Clean and dry.
	3. Defective ignition coil/plug cap.	Replace.
	4. Defective CKP sensor.	Replace.
	5. Defective ECM.	Replace.
	6. Open-circuited wiring connections.	Repair or replace.
	No fuel reaching intake manifold	
	1. Clogged fuel filter or fuel hose.	Clean or replace.
	2. Defective fuel pump.	Replace.
	3. Defective fuel pressure regulator.	Replace.
	4. Defective fuel injector.	Replace.
	5. Defective fuel pump relay.	Replace.
	6. Defective ECM.	Replace.
	7. Open-circuited wiring connections.	Check and repair.
	Incorrect fuel/air mixture	
	1. Out of adjustment throttle position sensor.	Adjust.
	2. Defective fuel pump.	Replace.
	3. Defective fuel pressure regulator.	Replace.
	4. Defective throttle position sensor.	Replace.
	5. Defective crankshaft position sensor.	Replace.
	6. Defective intake air pressure sensor.	Replace.
	7. Defective atmospheric pressure sensor.	Replace.
	8. Defective ECM.	Replace.
	9. Defective engine coolant temp. sensor.	Replace.
	10. Defective intake air temp. sensor.	Replace.

Complaint	Symptom and possible causes	Remedy
Engine idles poorly.	1. Out of adjustment valve clearance.	Adjust.
	2. Poor seating of valves.	Replace or repair.
	3. Defective valve guides.	Replace.
	4. Worn down camshaft.	Replace.
	5. Too wide spark plug gaps.	Adjust or replace.
	6. Defective ignition coil/plug cap.	Replace.
	7. Defective crankshaft position sensor.	Replace.
	8. Defective ECM.	Replace.
	9. Defective throttle position sensor.	Replace.
	10. Defective fuel pump.	Replace.
	11. Imbalanced throttle valve.	Adjust.
	12. Damaged or cracked vacuum hose.	Replace.
Engine stalls easily.	**Incorrect fuel/air mixture**	
	1. Defective intake air pressure sensor or circuit.	Repair or replace.
	2. Clogged fuel filter.	Clean or replace.
	3. Defective fuel pump.	Replace.
	4. Defective fuel pressure regulator.	Replace.
	5. Defective engine coolant temp. sensor.	Replace.
	6. Defective thermostat.	Replace.
	7. Defective intake air temp. sensor.	Replace.
	Improperly working fuel injector	
	1. Defective fuel injector.	Replace.
	2. No injection signal from ECM.	Repair or replace.
	3. Open or short circuited wiring connection.	Repair or replace.
	4. Defective battery or low battery voltage.	Replace or recharge.
	Improperly working control circuit or sensors	
	1. Defective ECM.	Replace.
	2. Defective fuel pressure regulator.	Replace.
	3. Defective throttle position sensor.	Replace.
	4. Defective intake air temp. sensor.	Replace.
	5. Defective camshaft position sensor.	Replace.
	6. Defective crankshaft position sensor.	Replace.
	7. Defective engine coolant temp. sensor.	Replace.
	8. Defective fuel pump relay.	Replace.
	Improperly working engine internal parts	
	1. Fouled spark plugs.	Clean.
	2. Defective crankshaft position sensor or ECM.	Replace.
	3. Clogged fuel hose.	Clean.
	4. Out of adjustment tappet clearance.	Adjust.

Complaint	Symptom and possible causes	Remedy
Noisy engine.	**Excessive valve chatter**	
	1. Too large valve clearance.	Adjust.
	2. Weakened or broken valve springs.	Replace.
	3. Worn tappet or cam surface.	Replace.
	4. Worn and burnt camshaft journal.	Replace.
	Noise seems to come from piston	
	1. Worn down pistons or cylinders.	Replace.
	2. Fouled with carbon combustion chambers.	Clean.
	3. Worn piston pins or piston pin bore.	Replace.
	4. Worn piston rings or ring grooves.	Replace.
	Noise seems to come from timing chain	
	1. Stretched chain.	Replace.
	2. Worn sprockets.	Replace.
	3. Not working tension adjuster.	Repair or replace.
	Noise seems to come from clutch	
	1. Worn splines of countershaft or hub.	Replace.
	2. Worn teeth of clutch plates.	Replace.
	3. Distorted clutch plates, driven and drive.	Replace.
	4. Worn clutch release bearing.	Replace.
	5. Weakened clutch dampers.	Replace the primary driven gear.
	Noise seems to come from crankshaft	
	1. Due to wear rattling bearings.	Replace.
	2. Worn and burnt big-end bearings.	Replace.
	3. Worn and burnt journal bearings.	Replace.
	4. Too large thrust clearance.	Replace thrust bearing.
	Noise seems to come from balancer	
	1. Worn and burnt journal bearings.	Replace.
	Noise seems to come from transmission	
	1. Worn or rubbing gears.	Replace.
	2. Worn splines.	Replace.
	3. Worn or rubbing primary gears.	Replace.
	4. Worn bearings.	Replace.
	Noise seems to come from water pump	
	1. Too much play on pump shaft bearing.	Replace.
	2. Worn or damaged impeller shaft.	Replace.
	3. Worn or damaged mechanical seal.	Replace.
	4. Touches pump case and impeller.	Replace.
Engine runs poorly in high speed range.	**Defective engine internal/electrical parts**	
	1. Weakened valve springs.	Replace.
	2. Worn camshafts.	Replace.
	3. Valve timing out of adjustment.	Adjust.
	4. Too narrow spark plug gaps.	Adjust.
	5. Ignition not advanced sufficiently due to poorly working timing advance circuit.	Replace ECM.
	6. Defective ignition coil.	Replace.
	7. Defective crankshaft position sensor.	Replace.
	8. Defective ECM.	Replace.
	9. Clogged air cleaner element.	Clean.
	10. Clogged fuel hose, resulting in inadequate fuel supply to injector.	Clean and prime.
	11. Defective fuel pump.	Replace.
	12. Defective throttle position sensor.	Replace.
	13. Defective STP sensor or STV actuator	Replace.

Complaint	Symptom and possible causes	Remedy
Engine runs poorly in high speed range.	**Defective air flow system**	
	1. Clogged air cleaner element.	Clean or replace.
	2. Defective throttle valve.	Adjust or replace.
	3. Defective secoundary throttle valve.	Adjust or replace.
	4. Sucking air from throttle body joint.	Repair or replace.
	5. Defective ECM.	Replace.
	6. Imbalancing throttle valve synchronization.	Adjust.
	Defective control circuit or sensor	
	1. Low fuel pressure.	Repair or replace.
	2. Defective throttle position sensor.	Replace.
	3. Defective intake air temp. sensor.	Replace.
	4. Defective camshaft position sensor.	Replace.
	5. Defective crankshaft position sensor.	Replace.
	6. Defective gear position sensor.	Replace.
	7. Defective intake air pressure sensor.	Replace.
	8. Defective atmospheric pressure sensor.	Replace.
	9. Defective ECM.	Replace.
	10. Out of adjustment throttle position sensor.	Adjust.
	11. Defective STP sensor and/or STV actuator.	Replace.
Engine lacks power.	**Defective engine internal/electrical parts**	
	1. Loss of valve clearance.	Adjust.
	2. Weakened valve springs.	Replace.
	3. Out of adjustment valve timing.	Adjust.
	4. Worn piston rings or cylinders.	Replace.
	5. Poor seating of valves.	Repair.
	6. Fouled spark plug.	Clean or replace.
	7. Incorrect spark plug.	Adjust or replace.
	8. Clogged injector.	Clean.
	9. Out of adjustment throttle position sensor.	Adjust.
	10. Clogged air cleaner element.	Clean.
	11. Imbalancing throttle valve synchronization.	Adjust.
	12. Sucking air from throttle valve or vacuum hose.	Retighten or replace.
	13. Too much engine oil.	Drain out excess oil.
	14. Defective fuel pump or ECM.	Replace.
	15. Defective crankshaft position sensor and ignition coil.	Replace.
	Defective control circuit or sensor	
	1. Low fuel pressure.	Repair or replace.
	2. Defective throttle position sensor.	Replace.
	3. Defective intake air temp. sensor.	Replace.
	4. Defective camshaft position sensor.	Replace.
	5. Defective crankshaft position sensor.	Replace.
	6. Defective gear position sensor.	Replace.
	7. Defective intake air pressure sensor.	Replace.
	8. Defective atmospheric pressure sensor.	Replace.
	9. Defective ECM.	Replace.
	10. Out of adjustment throttle position sensor.	Adjust.
	11. Defective STP sensor and/or STV actuator.	Replace.
	12. Defective EXCV actuator.	Replace.

Complaint	Symptom and possible causes	Remedy
Engine overheats.	**Defective engine internal parts**	
	1. Heavy carbon deposit on piston crowns.	Clean.
	2. Not enough oil in the engine.	Add oil.
	3. Defective oil pump or clogged oil circuit.	Replace or clean.
	4. Sucking air from intake pipes.	Retighten or replace.
	5. Use incorrect engine oil.	Change.
	6. Defective cooling system.	See radiator section.
	Lean fuel/air mixture	
	1. Short-circuited intake air pressure sensor/lead wire.	Repair or replace.
	2. Short-circuited intake air temp. sensor/lead wire.	Repair or replace.
	3. Sucking air from intake pipe joint.	Clean or replace.
	4. Defective fuel injector.	Repair or replace.
	5. Defective engine coolant temp. sensor.	Replace.
	The other factors	
	1. Ignition timing is too advanced due to defective timing advance system (engine coolant temp. sensor, gear position sensor, crankshaft position sensor and ECM.)	Replace.
	2. Drive chain is too tight.	Adjust.
Dirty or heavy exhaust smoke.	1. Too much engine oil in the engine.	Check with inspection window drain out excess oil.
	2. Worn piston rings or cylinders.	Replace.
	3. Worn valve guides.	Replace.
	4. Scored or scuffed cylinder walls.	Replace.
	5. Worn valves stems.	Replace.
	6. Defective stem seal.	Replace.
	7. Worn oil ring side rails.	Replace.
Slipping clutch.	1. Weakened clutch springs.	Replace.
	2. Worn or distorted pressure plate.	Replace.
	3. Distorted clutch plates or clutch plate.	Replace.
Dragging clutch.	1. Some clutch spring weakened while others are not.	Replace.
	2. Distorted pressure plate or clutch plate.	Replace.
Transmission will not shift.	1. Broken gearshift cam.	Replace.
	2. Distorted gearshift forks.	Replace.
	3. Worn gearshift pawl.	Replace.
Transmission will not shift back.	1. Broken return spring on shift shaft.	Replace.
	2. Rubbing or stickly shift shaft.	Repair or replace.
	3. Distorted or worn gearshift forks.	Replace.
Transmission jumps out of gear.	1. Worn shifting gears on driveshaft or countershaft.	Replace.
	2. Distorted or worn gearshift forks.	Replace.
	3. Weakened stopper spring on gearshift stopper.	Replace.
	4. Worn gearshift cam plate.	Replace.

RADIATOR (COOLING SYSTEM)

Complaint	Symptom and possible causes	Remedy
Engine overheats.	1. Not enough engine coolant.	Add coolant.
	2. Clogged with dirt or trashes radiator core.	Clean.
	3. Faulty cooling fan.	Repair or replace.
	4. Defective cooling fan thermo-switch.	Replace.
	5. Clogged water passage.	Clean.
	6. Air trapped in the cooling circuit.	Bleed out air.
	7. Defective water pump.	Replace.
	8. Use incorrect coolant.	Replace.
	9. Defective thermostat.	Replace.
Engine overcools.	1. Defective cooling fan thermo-switch.	Replace.
	2. Extremely cold weather.	Put on the radiator cover.
	3. Defective thermostat.	Replace.

CHASSIS

Complaint	Symptom and possible causes	Remedy
Heavy steering.	1. Overtightened steering stem nut.	Adjust.
	2. Broken bearing in steering stem.	Replace.
	3. Distorted steering stem.	Replace.
	4. Not enough pressure in tires.	Adjust.
Wobbly handlebars.	1. Loss of balance between right and left front forks.	Adjust.
	2. Distorted front fork.	Repair or replace.
	3. Distorted front axle or crooked tire.	Replace.
	4. Loose steering stem nut.	Adjust.
	5. Worn or incorrect tire or wrong tire pressure.	Adjust or replace.
	6. Worn bearing/race in steering stem.	Replace.
Wobbly front wheel.	1. Distorted wheel rim.	Replace.
	2. Worn front wheel bearings.	Replace.
	3. Defective or incorrect tire.	Replace.
	4. Loose axle or axle pinch bolt.	Retighten.
	5. Incorrect front fork oil level.	Adjust.
Front suspension too soft.	1. Weakened springs.	Replace.
	2. Not enough fork oil.	Replenish.
	3. Wrong weight fork oil.	Replace.
	4. Improperly set front fork spring adjuster.	Adjust.
	5. Improperly set front fork damping force adjuster.	Adjust.
Front suspension too stiff.	1. Too viscous fork oil.	Replace.
	2. Too much fork oil.	Drain excess oil.
	3. Improperly set front fork spring adjuster.	Adjust.
	4. Improperly set front fork damping force adjuster.	Adjust.
	5. Bent front axle.	Replace.
Noisy front suspension.	1. Not enough fork oil.	Replenish.
	2. Loose bolts on suspension.	Retighten.
Wobbly rear wheel.	1. Distorted wheel rim.	Replace.
	2. Worn rear wheel bearing or swingarm bearings.	Replace.
	3. Defective or incorrect tire.	Replace.
	4. Worn swingarm and rear suspension bearings.	Replace.
	5. Loose nuts or bolts on rear suspensions.	Retighten.
Rear suspension too soft.	1. Weakened spring of shock absorber.	Replace.
	2. Leakage oil or gas of shock absorber.	Replace.
	3. Improperly set rear spring pre-load adjuster.	Adjust.
	4. Improperly set damping force adjuster.	Adjust.
Rear suspension too stiff.	1. Bent shock absorber shaft.	Replace.
	2. Bent swingarm.	Replace.
	3. Worn swingarm and rear suspension bearings.	Replace.
	4. Improperly set rear spring pre-load adjuster.	Adjust.
	5. Improperly set damping force adjuster.	Adjust.
Noisy rear suspension.	1. Loose nuts or bolts on rear suspension.	Retighten.
	2. Worn swingarm and suspension bearings.	Replace.

BRAKES

Complaint	Symptom and possible causes	Remedy
Insufficient brake power.	1. Leakage of brake fluid from hydraulic system. 2. Worn pads. 3. Oil adhesion of engaging surface of pads/shoe. 4. Worn disc. 5. Air in hydraulic system. 6. Not enough brake fluid in the reservoir.	Repair or replace. Replace. Clean disc and pads. Replace. Bleed air. Replenish.
Brake squeaking.	1. Carbon adhesion on pad surface. 2. Tilted pad. 3. Damaged wheel bearing. 4. Loosen front-wheel axle or rear-wheel axle. 5. Worn pads. 6. Foreign material in brake fluid. 7. Clogged return port of master cylinder.	Repair surface with sandpaper. Modify pad fitting or replace. Replace. Tighten to specified torque. Replace. Replace brake fluid. Disassemble and clean master cylinder.
Excessive brake lever stroke.	1. Air in hydraulic system. 2. Insufficient brake fluid. 3. Improper quality of brake fluid.	Bleed air. Replenish fluid to specified level; bleed air. Replace with correct fluid.
Leakage of brake fluid	1. Insufficient tightening of connection joints. 2. Cracked hose. 3. Worn piston and/or cup.	Tighten to specified torque. Replace. Replace piston and/or cup.
Brake drags.	1. Rusty part. 2. Insufficient brake lever or brake pedal pivot lubrication.	Clean and lubricate. Lubricate.

ELECTRICAL

Complaint	Symptom and possible causes	Remedy
No sparking or poor sparking.	1. Defective ignition coil/plug cap or camshaft position sensor. 2. Defective spark plugs. 3. Defective crankshaft position sensor. 4. Defective ECM. 5. Defective tip over sensor. 6. Open-circuited wiring connections.	Replace. Replace. Replace. Replace. Replace. Check and repair.
Spark plug soon become fouled with carbon.	1. Mixture too rich. 2. Idling speed set too high. 3. Incorrect gasoline. 4. Dirty element in air cleaner. 5. Too cold spark plugs.	Inspect FI system. Adjust fast idle or throttle stop screw. Change. Clean or replace. Replace with hot type plugs.
Spark plugs become fouled too soon.	1. Worn piston rings. 2. Worn piston or cylinders. 3. Excessive clearance of valve stems in valve guides. 4. Worn stem oil seal.	Replace. Replace. Replace. Replace.
Spark plug electrodes overheat or burn.	1. Too hot spark plugs. 2. Loose spark plugs. 3. Too lean mixture.	Replace with cold type plugs. Retighten. Inspect FI system.
Generator does not charge.	1. Open or short lead wires, or loose lead connections. 2. Shorted, grounded or open generator coils. 3. Shorted or punctured regulator/rectifiers.	Repair or replace or retighten. Replace. Replace.
Generator does charge, but charging rate is below the specification.	1. Lead wires tend to get shorted or open-circuited or loosely connected at terminals. 2. Grounded or open-circuited stator coils or generator. 3. Defective regulator/rectifier. 4. Defective cell plates in the battery.	Repair or retighten. Replace. Replace. Replace the battery.
Generator overcharges.	1. Internal short-circuit in the battery. 2. Damaged or defective regulator/rectifier. 3. Poorly grounded regulator/rectifier.	Replace the battery. Replace. Repair, replace, or connect properly.
Unstable charging.	1. Lead wire insulation frayed due to vibration, resulting in intermittent shorting. 2. Internally shorted generator. 3. Defective regulator/rectifier.	Repair or replace. Replace. Replace.
Starter button is not effective.	1. Run down battery. 2. Defective switch contacts. 3. Not seating properly brushes on commutator in starter motor. 4. Defective starter relay/starter interlock switch. 5. Defective main fuse.	Repair or replace. Replace. Repair or replace. Replace. Replace.

BATTERY

Complaint	Symptom and possible causes	Remedy
"Sulfation", acidic white powdery substance or spots on surface of cell plates.	1. Cracked battery case. 2. Battery has been left in a run-down condition for a long time.	Replace the battery. Replace the battery.
Battery runs down quickly.	1. Not correct the charging system.	Check the generator, regulator/rectifier and circuit connections and make necessary adjustments to obtain specified charging operation.
	2. Cell plates have lost much of their active material as a result of overcharging.	Replace the battery, and correct the charging system.
	3. Internal short-circuit in the battery.	Replace the battery.
	4. Too low battery voltage.	Recharge the battery fully.
	5. Too old battery.	Replace the battery.
Battery "sulfation".	1. Incorrect charging rate. (When not in use batteries should be checked at least once a month to avoid sulfation.)	Replace the battery.
	2. The battery was left un used in a cold climate for too long.	Replace the battery if badly sulfated.

WIRING HARNESS, CABLE AND HOSE ROUTING

WIRING HARNESS ROUTING

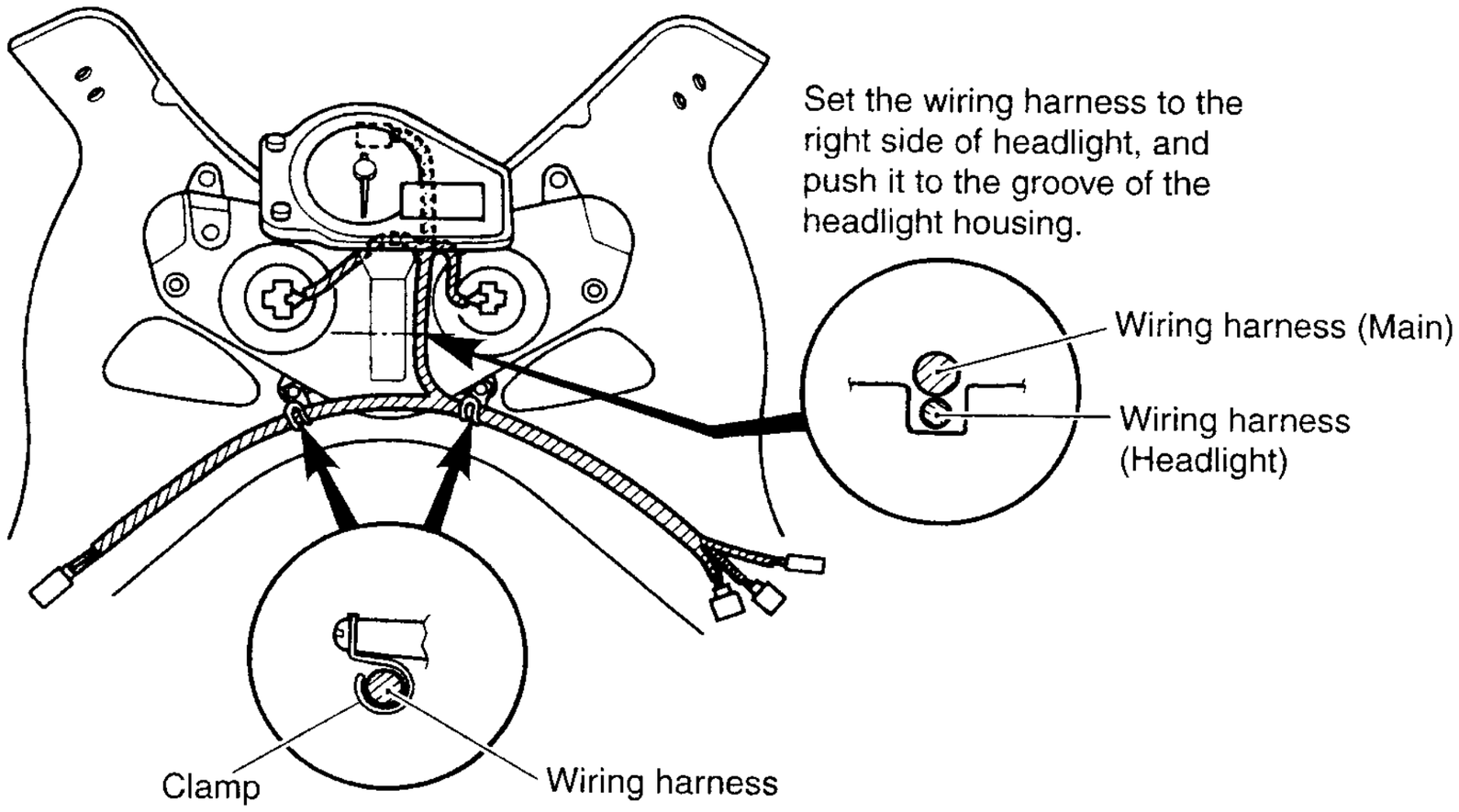

INSIDE OF THE BODY COWLING

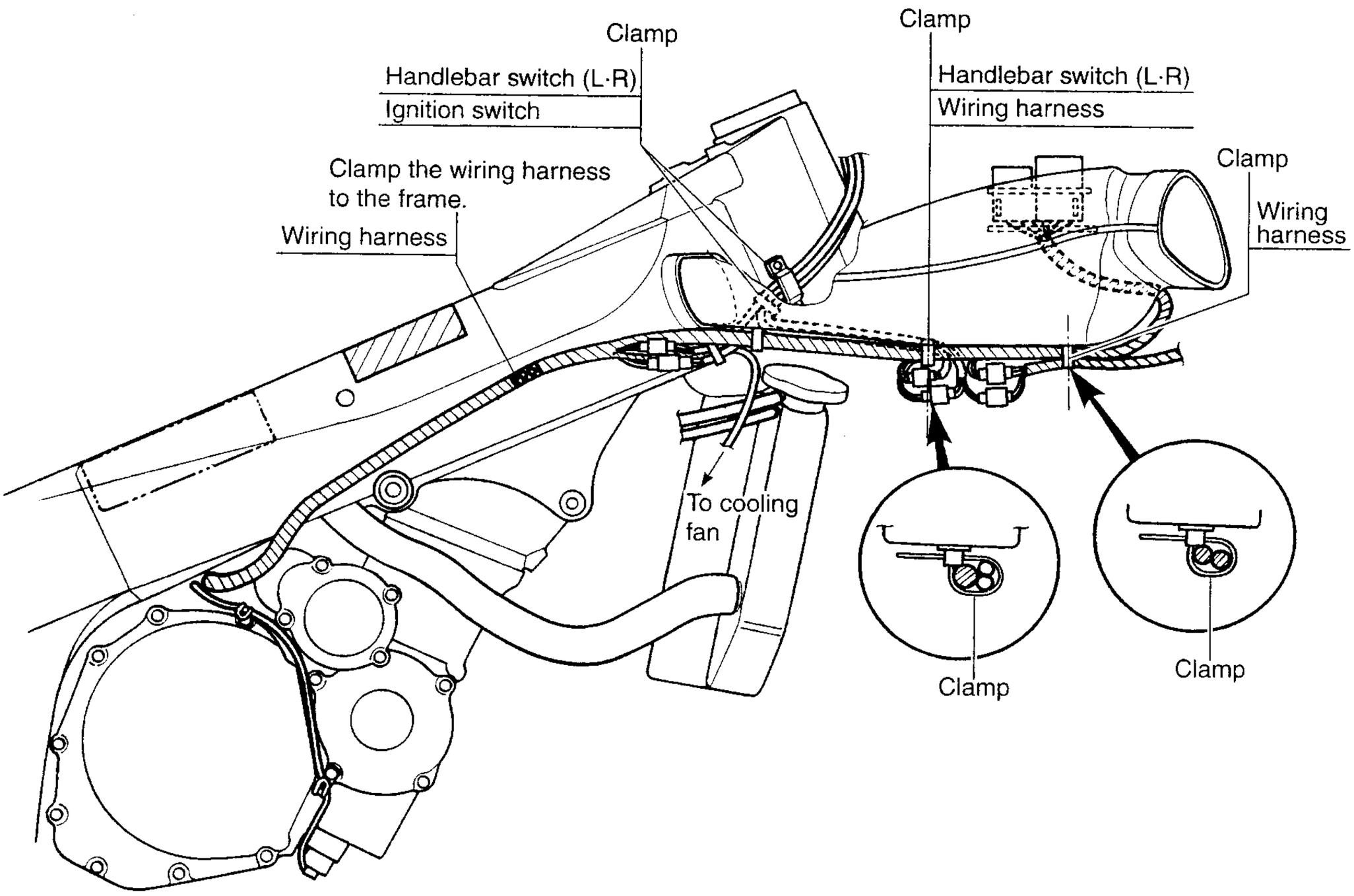

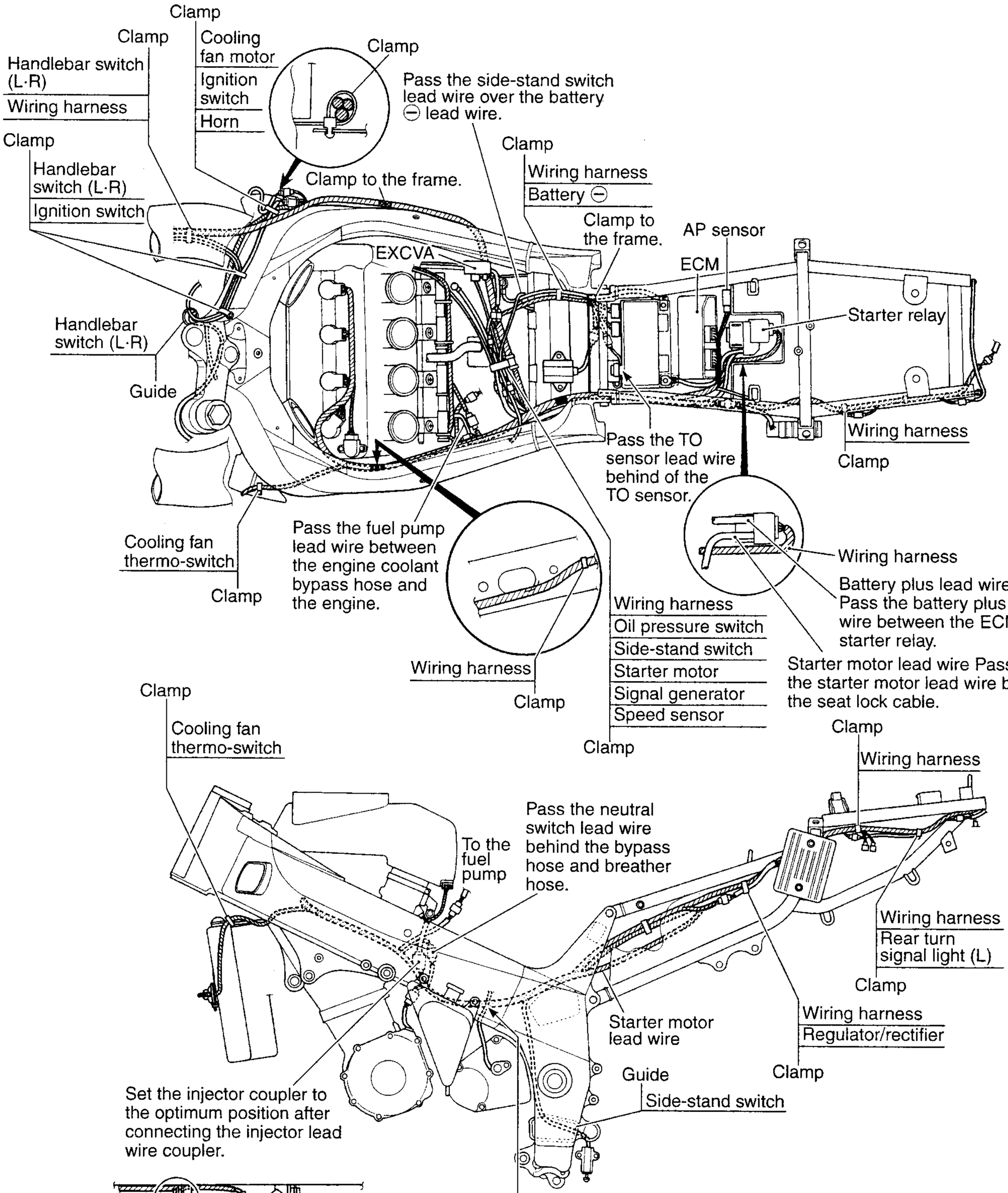
Clamp
Clamp
Cooling fan motor
Ignition switch
Horn
Clamp
Handlebar switch (L·R)
Wiring harness
Clamp
Handlebar switch (L·R)
Ignition switch
Pass the side-stand switch lead wire over the battery ⊖ lead wire.
Clamp to the frame.
Clamp
Wiring harness
Battery ⊖
Clamp to the frame.
AP sensor
ECM
EXCVA
Starter relay
Handlebar switch (L·R)
Guide
Wiring harness
Clamp
Pass the TO sensor lead wire behind of the TO sensor.
Cooling fan thermo-switch
Clamp
Pass the fuel pump lead wire between the engine coolant bypass hose and the engine.
Wiring harness
Battery plus lead wire
Pass the battery plus lead wire between the ECM and starter relay.
Wiring harness
Oil pressure switch
Side-stand switch
Starter motor
Signal generator
Speed sensor
Clamp
Starter motor lead wire Pass through the starter motor lead wire behind of the seat lock cable.
Clamp
Cooling fan thermo-switch
Clamp
Wiring harness
To the fuel pump
Pass the neutral switch lead wire behind the bypass hose and breather hose.
Wiring harness
Rear turn signal light (L)
Clamp
Starter motor lead wire
Wiring harness
Regulator/rectifier
Clamp
Guide
Side-stand switch
Set the injector coupler to the optimum position after connecting the injector lead wire coupler.
Pass the speed sensor lead wire over the wiring harness.
Horn
Pass the horn lead wire behind the radiator bracket.

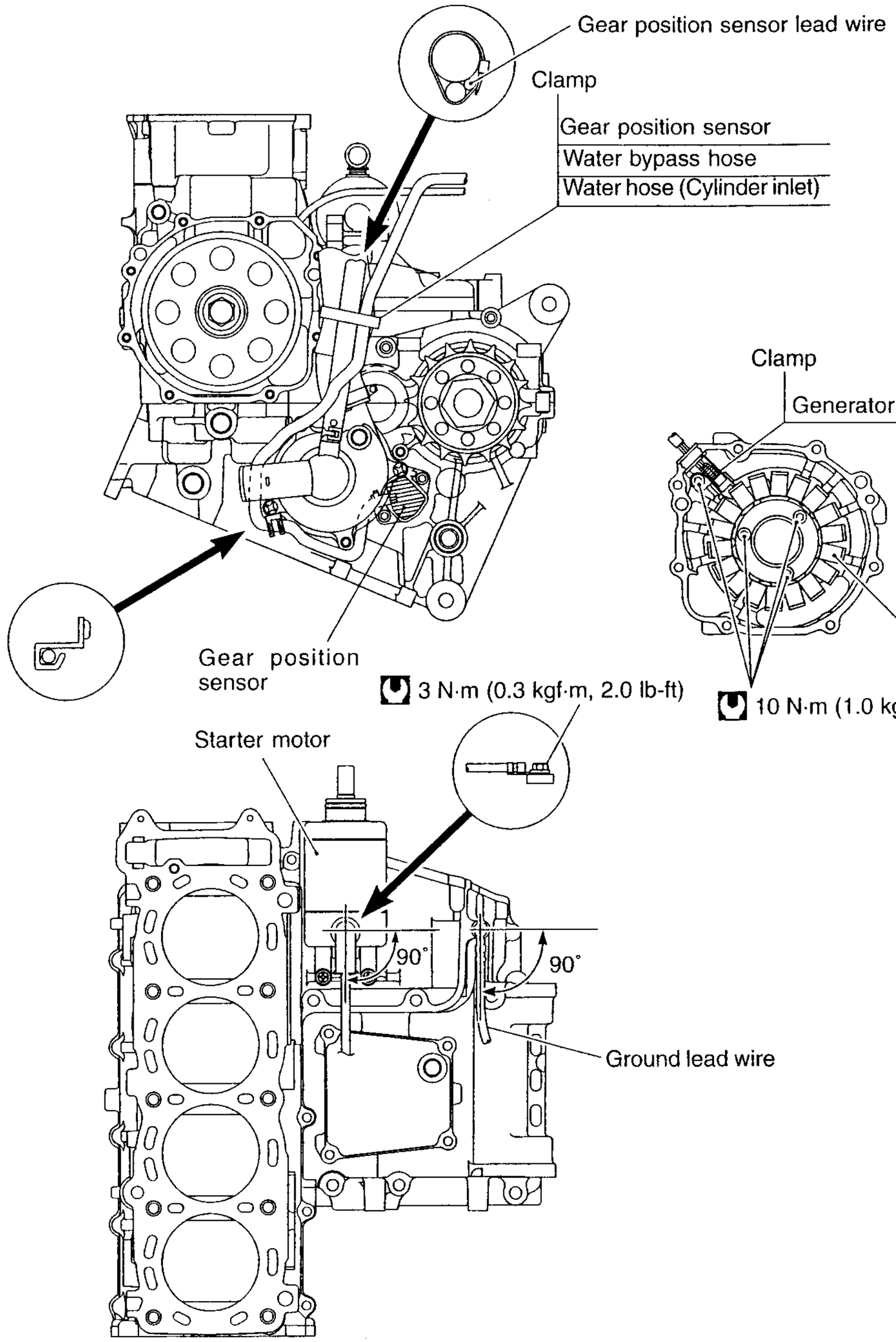
Gear position sensor lead wire
Clamp
Gear position sensor
Water bypass hose
Water hose (Cylinder inlet)
Gear position sensor
3 N·m (0.3 kgf·m, 2.0 lb-ft)
Starter motor
90°
90°
Ground lead wire

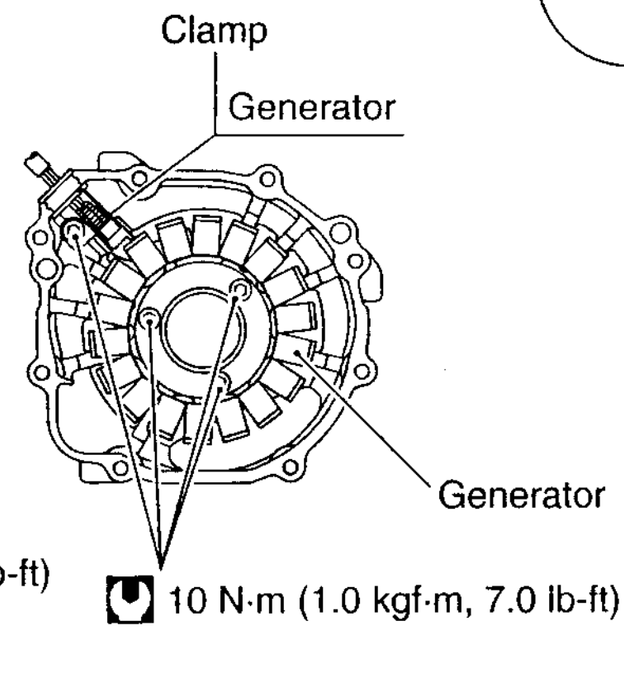
Clamp
Generator
Generator
10 N·m (1.0 kgf·m, 7.0 lb-ft)

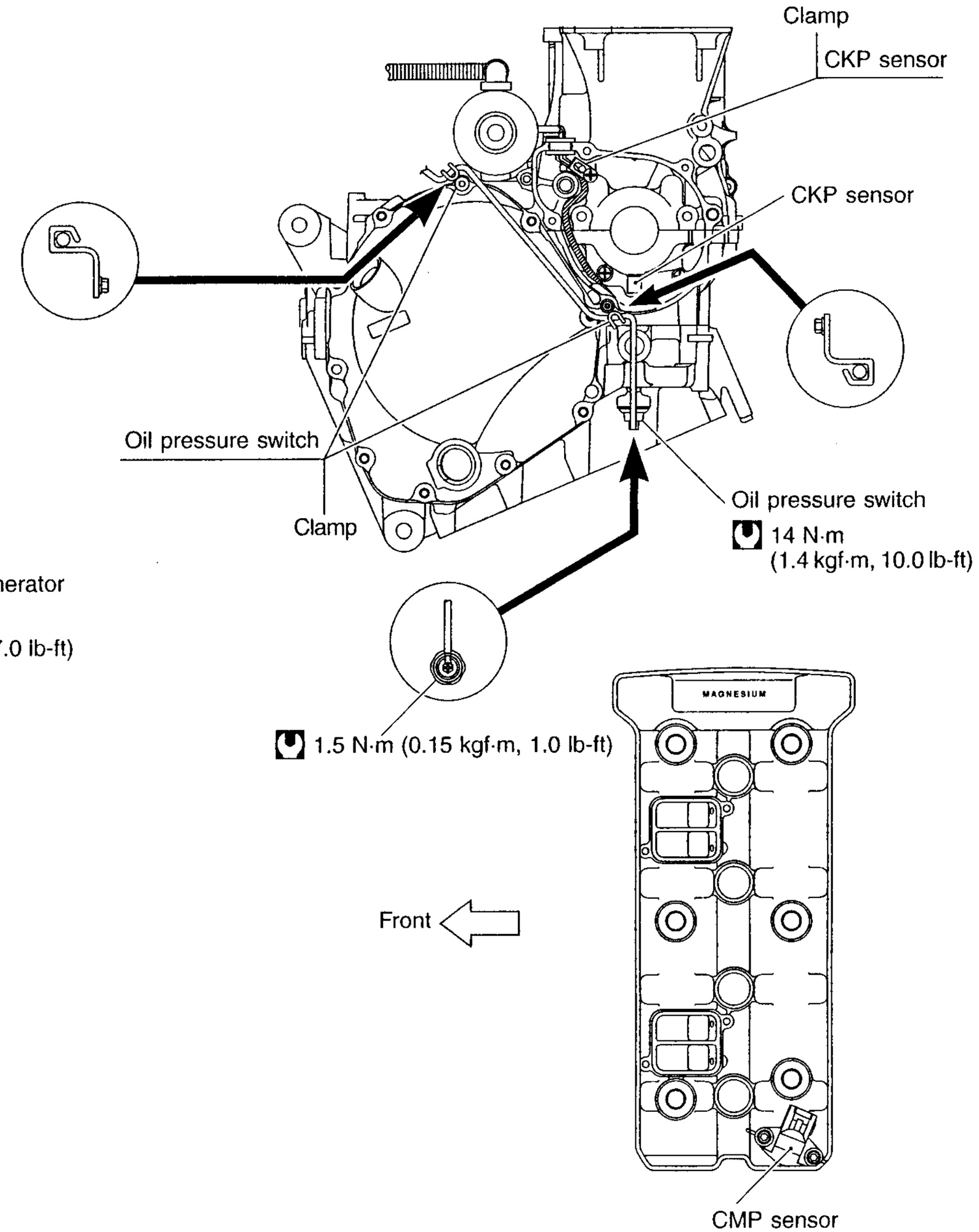
Clamp
CKP sensor
CKP sensor
Oil pressure switch
Clamp
Oil pressure switch
14 N·m
(1.4 kgf·m, 10.0 lb-ft)
1.5 N·m (0.15 kgf·m, 1.0 lb-ft)
Front
MAGNESIUM
CMP sensor

CABLE ROUTING

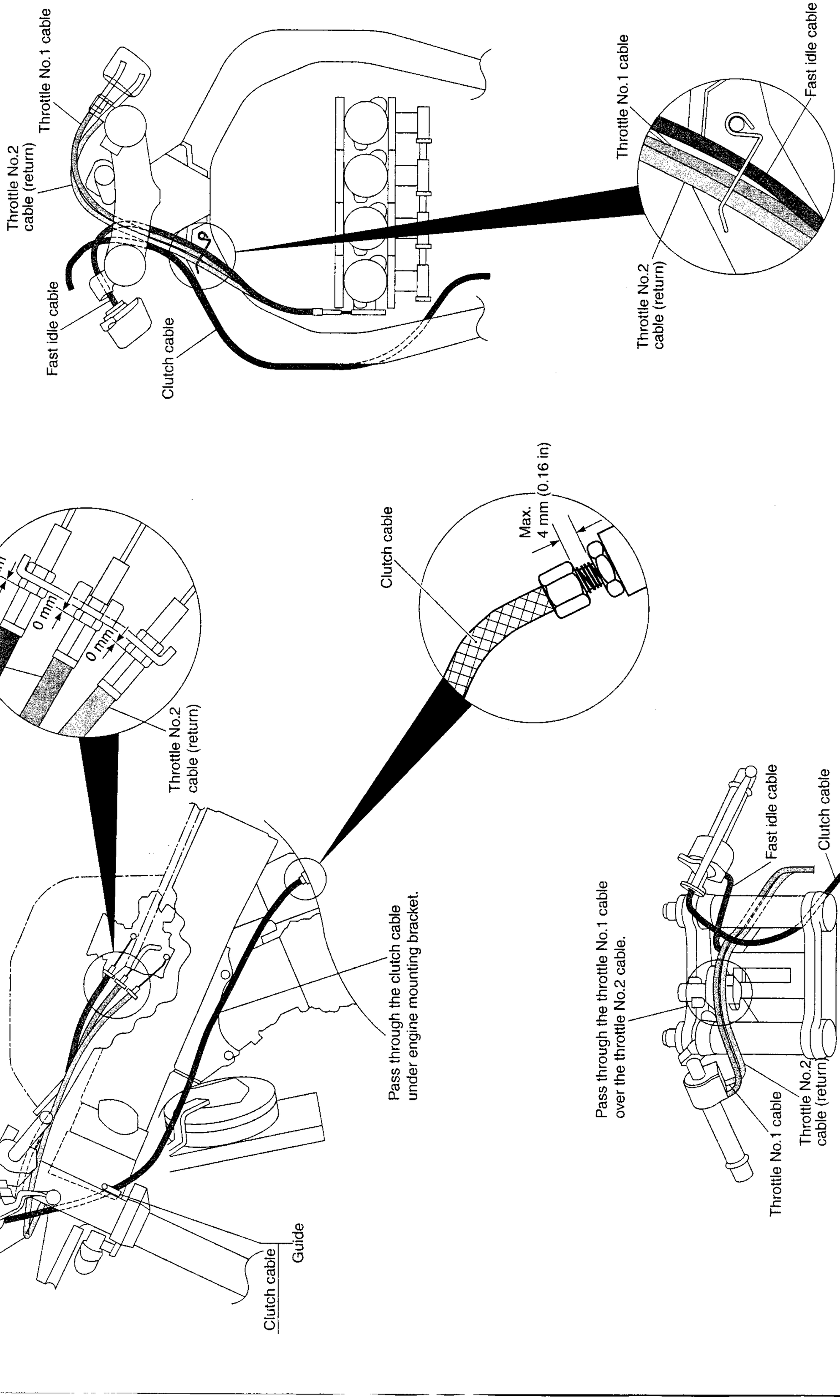

FUEL TANK DRAIN HOSE ROUTING

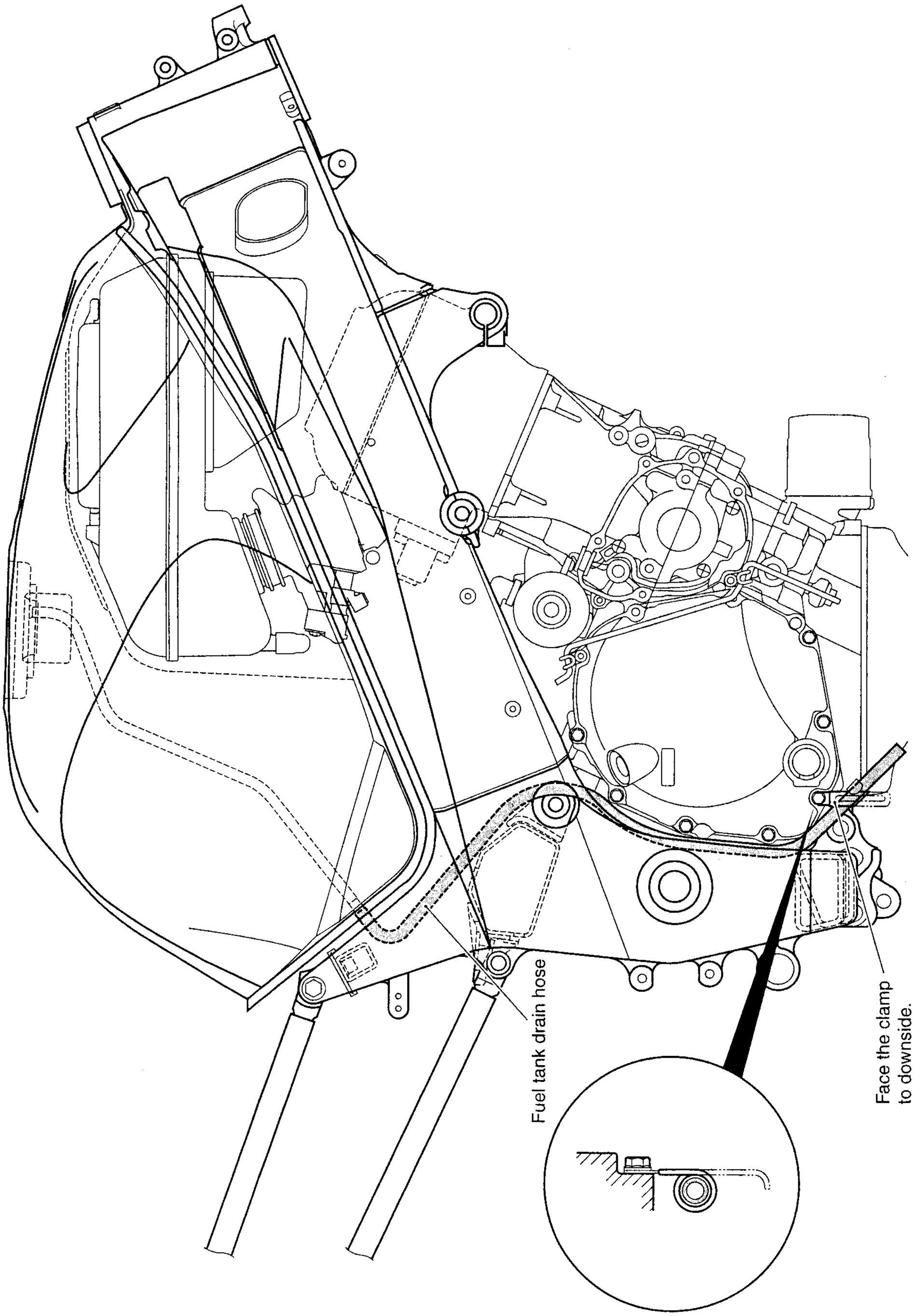

COOLING SYSTEM HOSE ROUTING

Ⓐ : The ends of the clamp face....
Ⓑ : The clamp bolt head face....

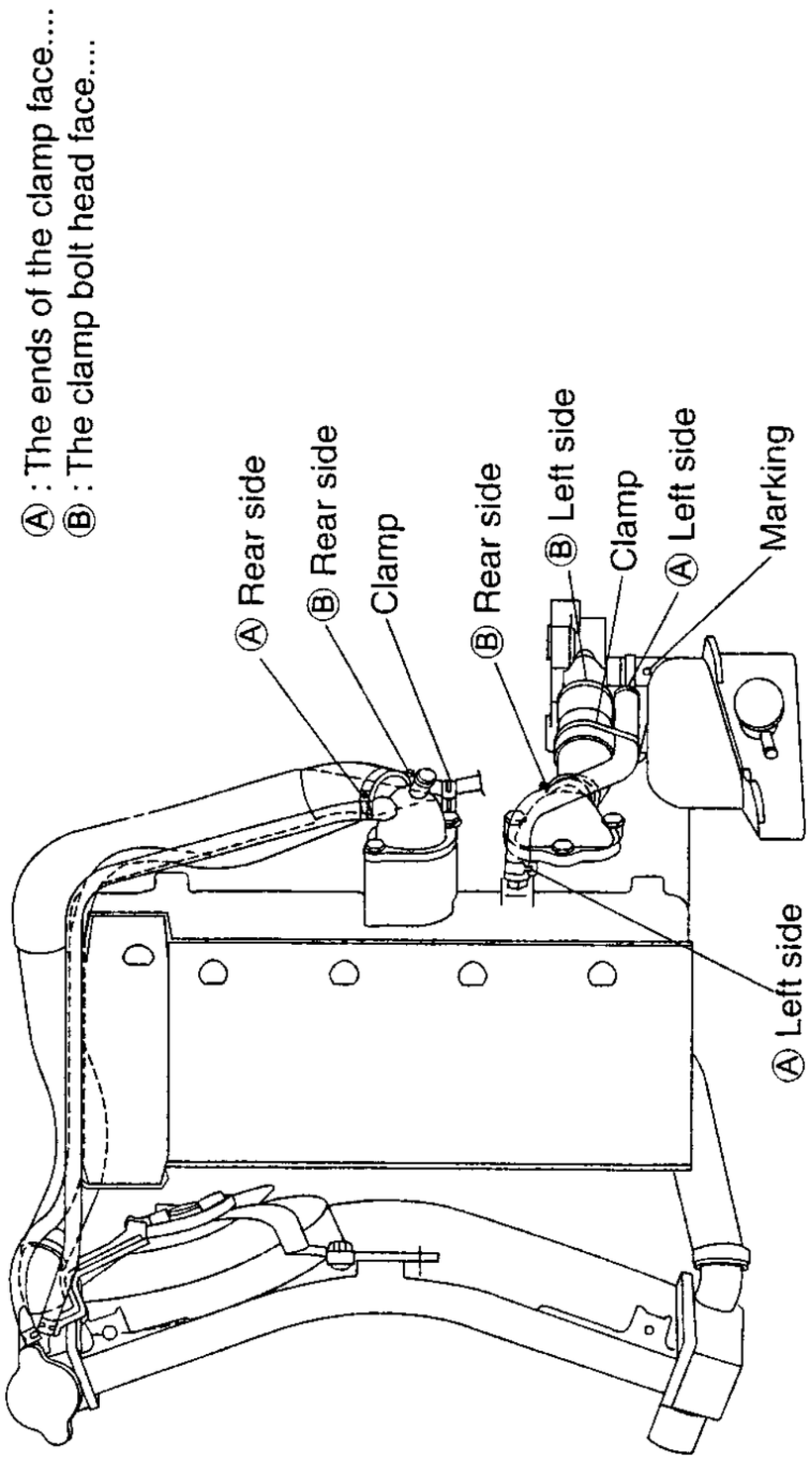

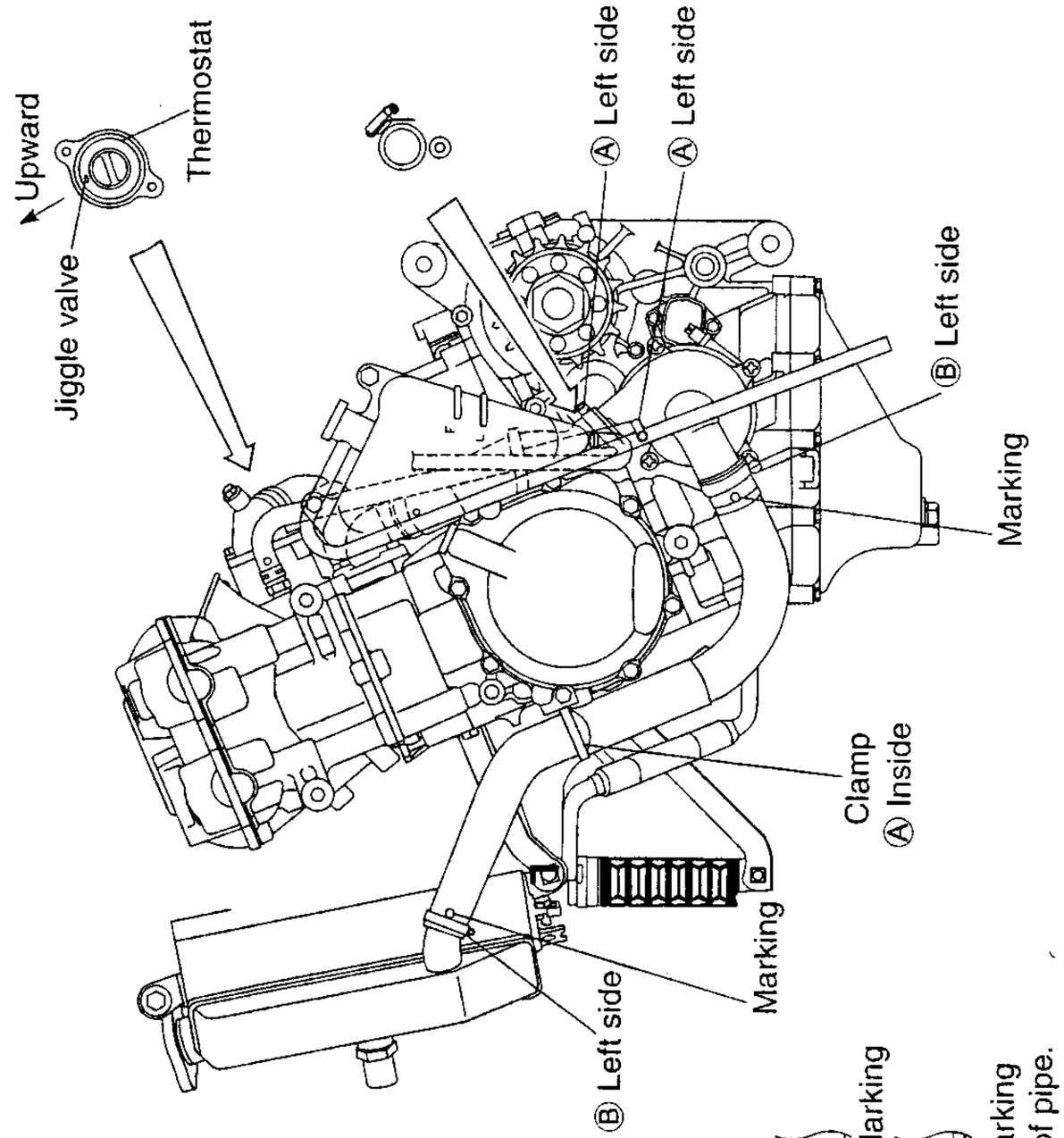

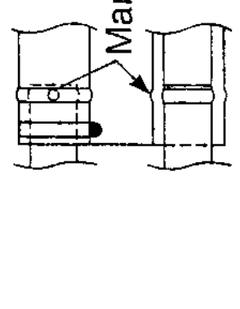

Align the marking with the lib of pipe.

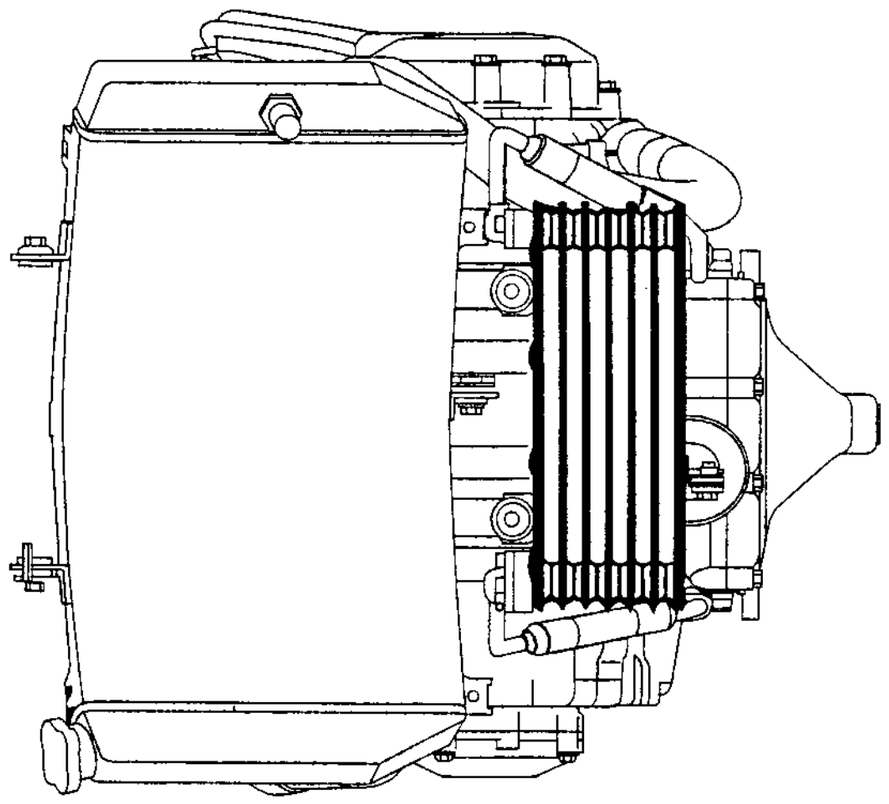

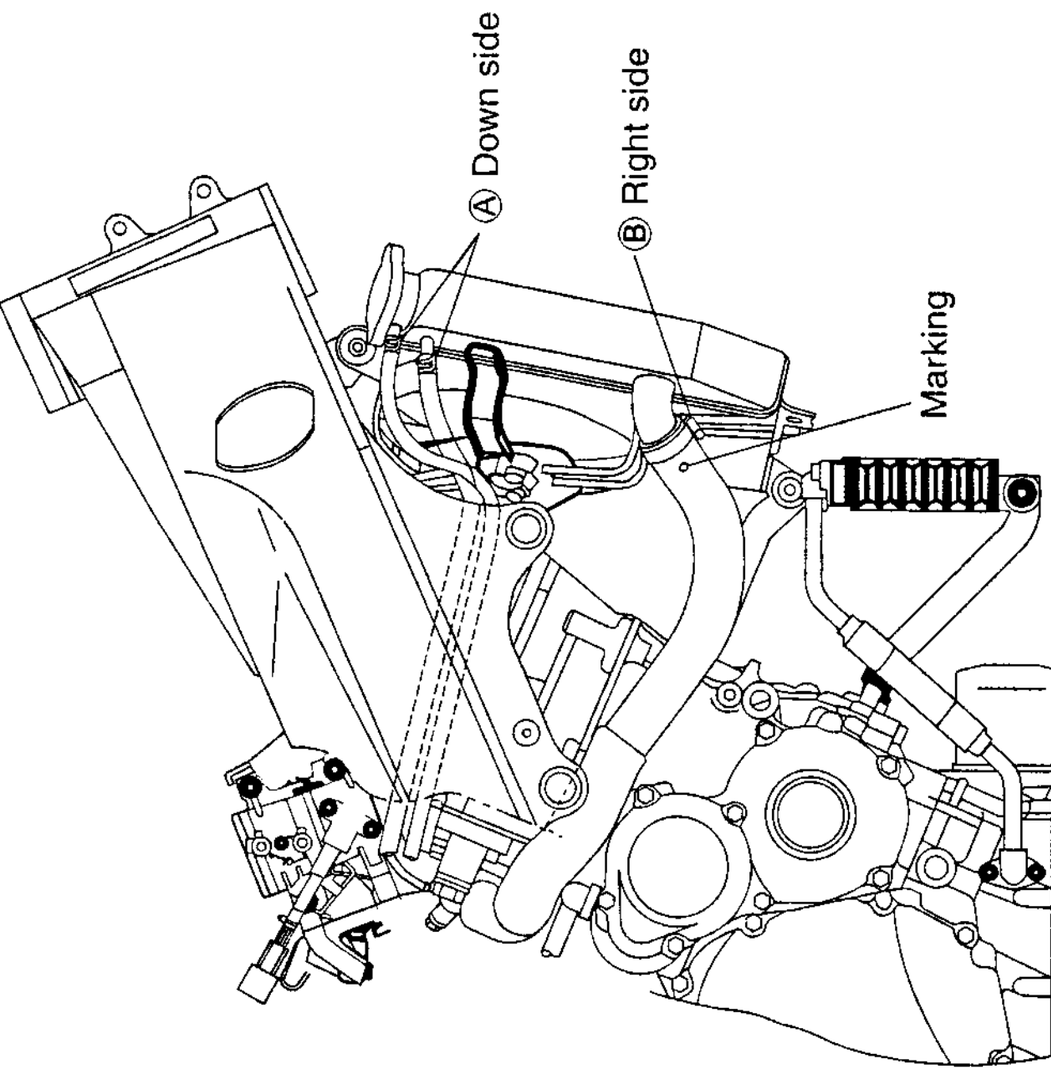

FRONT BRAKE HOSE ROUTING

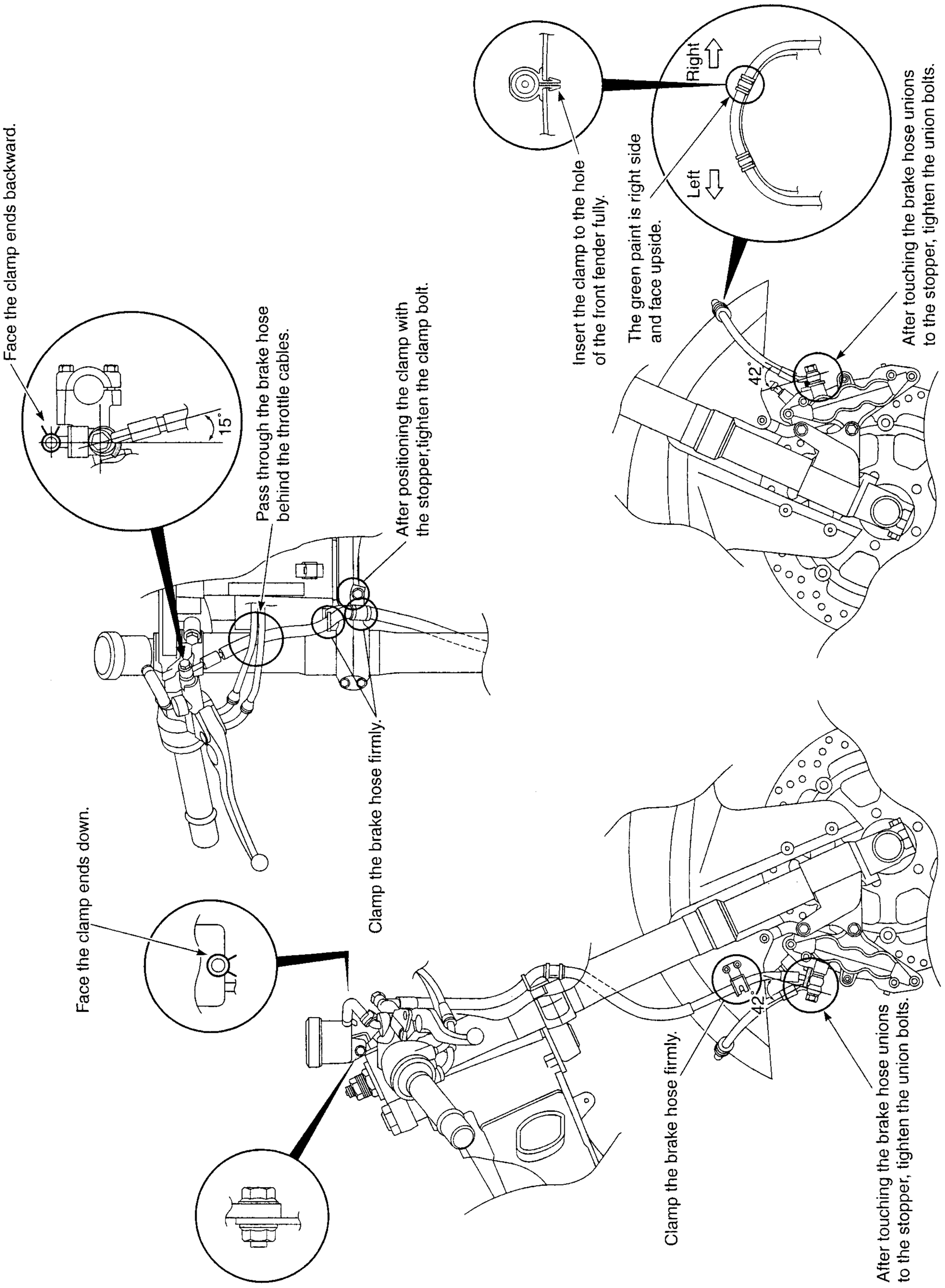

REAR BRAKE HOSE ROUTING

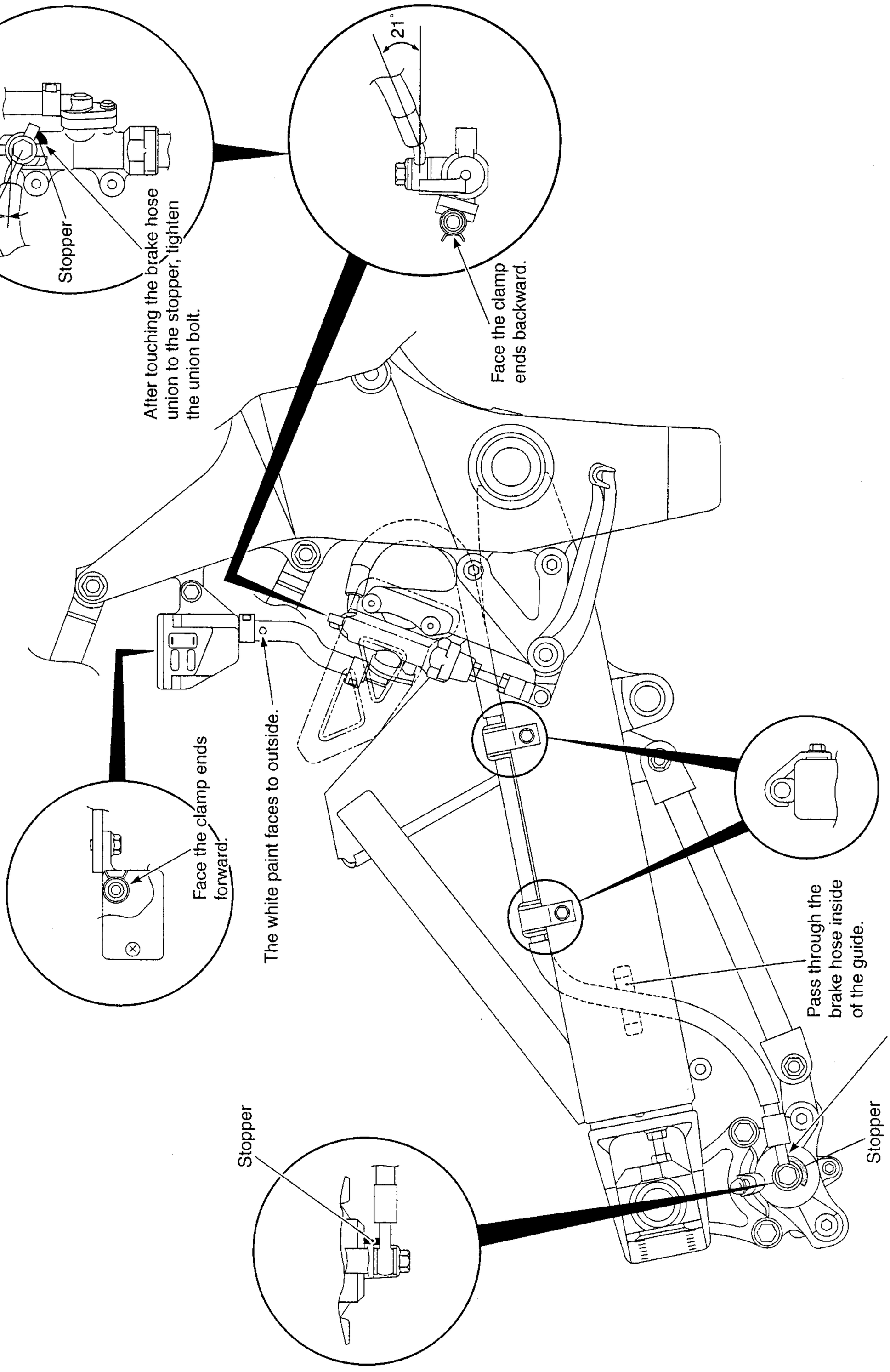

PAIR (AIR SUPPLY) SYSTEM HOSE ROUTING

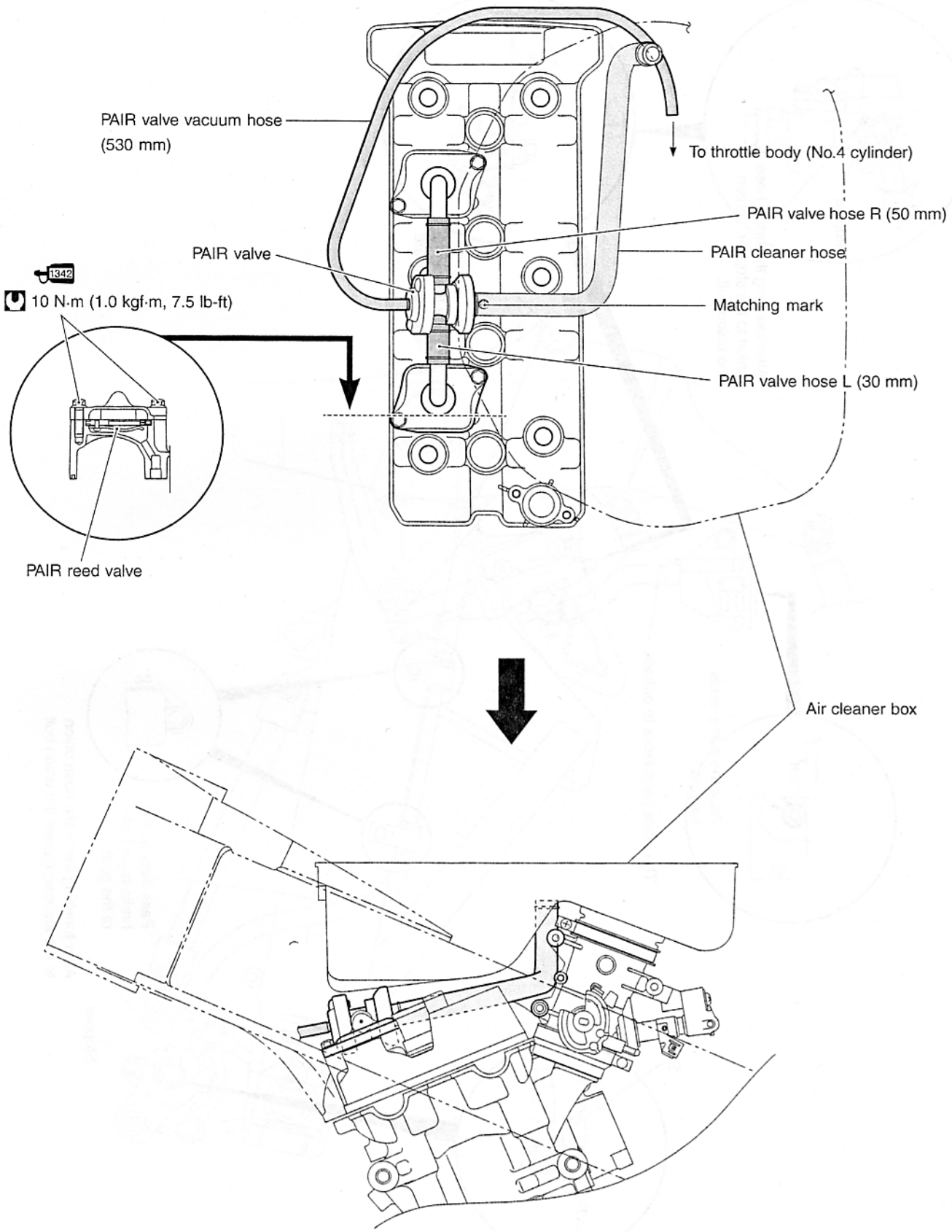

FUEL TANK SET-UP

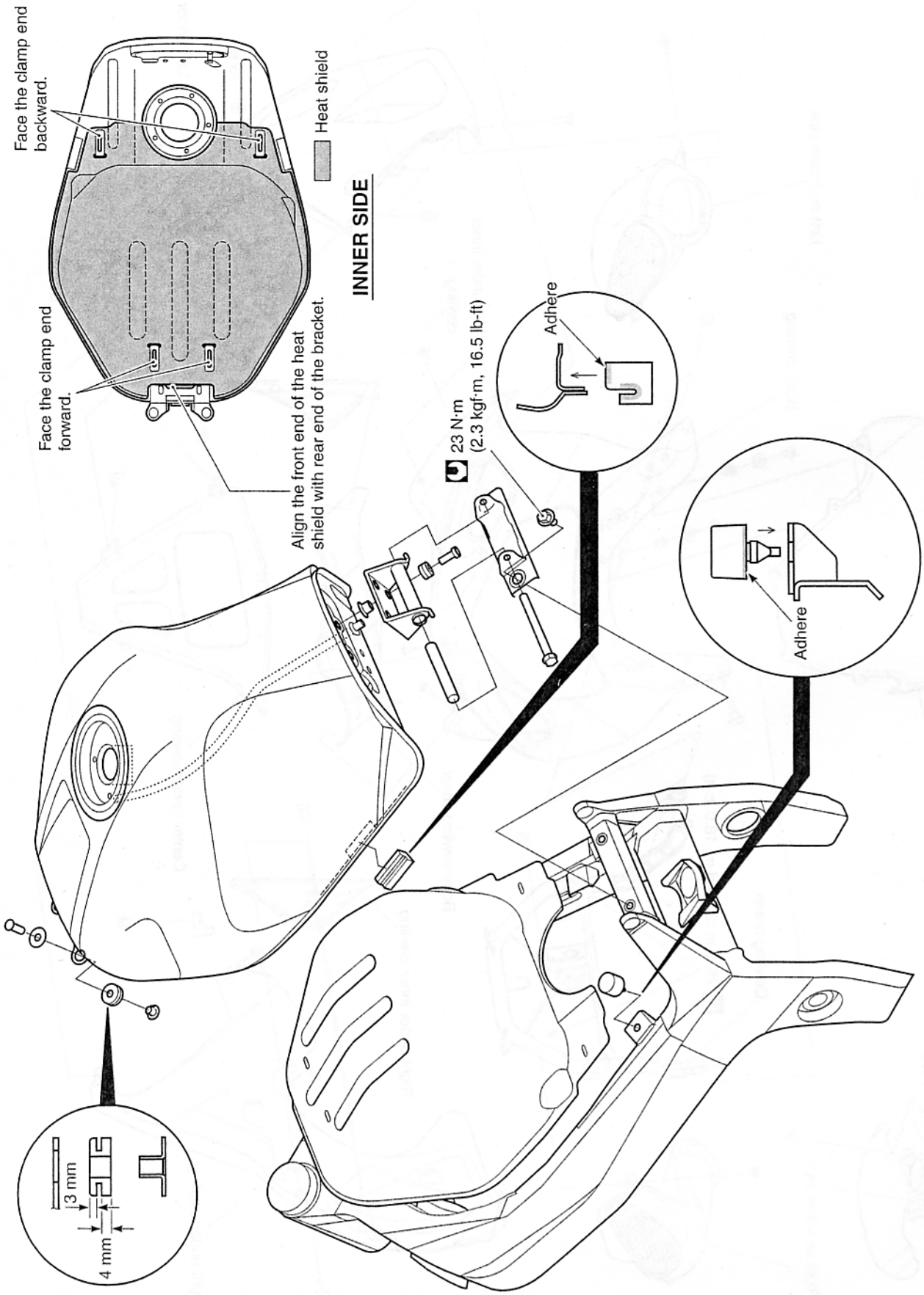

COWLING SET-UP

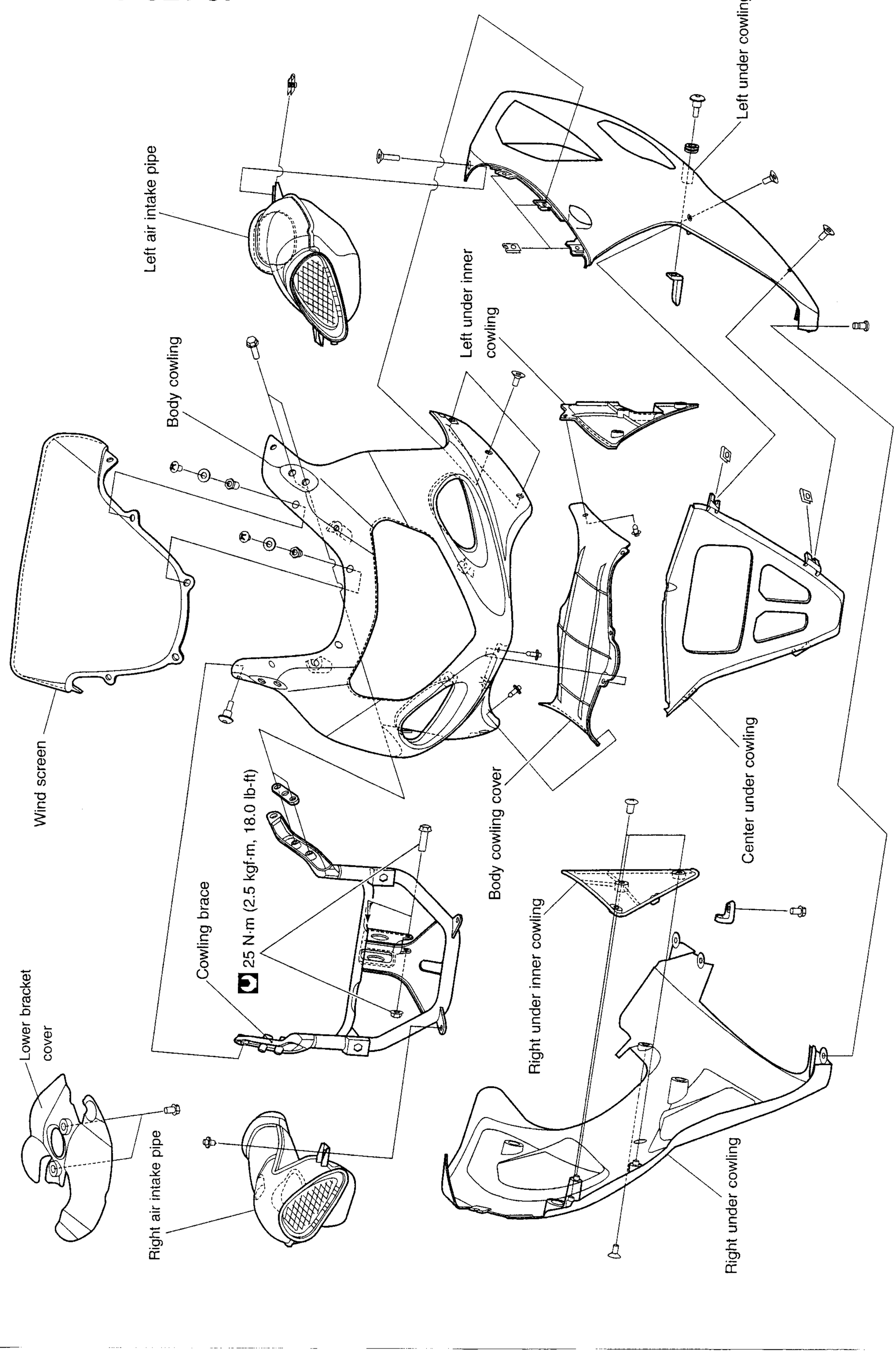

FRAME COVER SET-UP

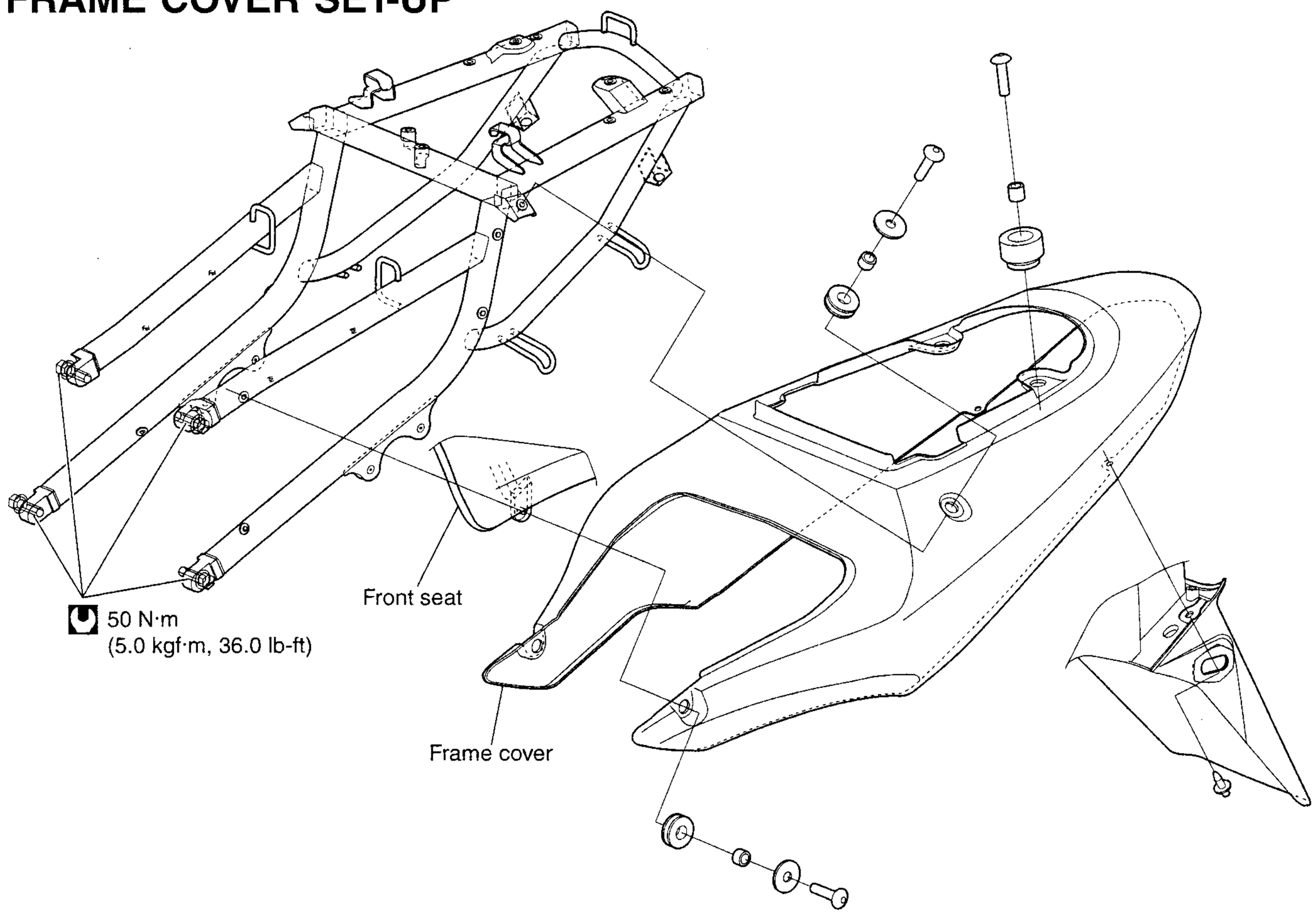

HEAT SHIELD SET-UP

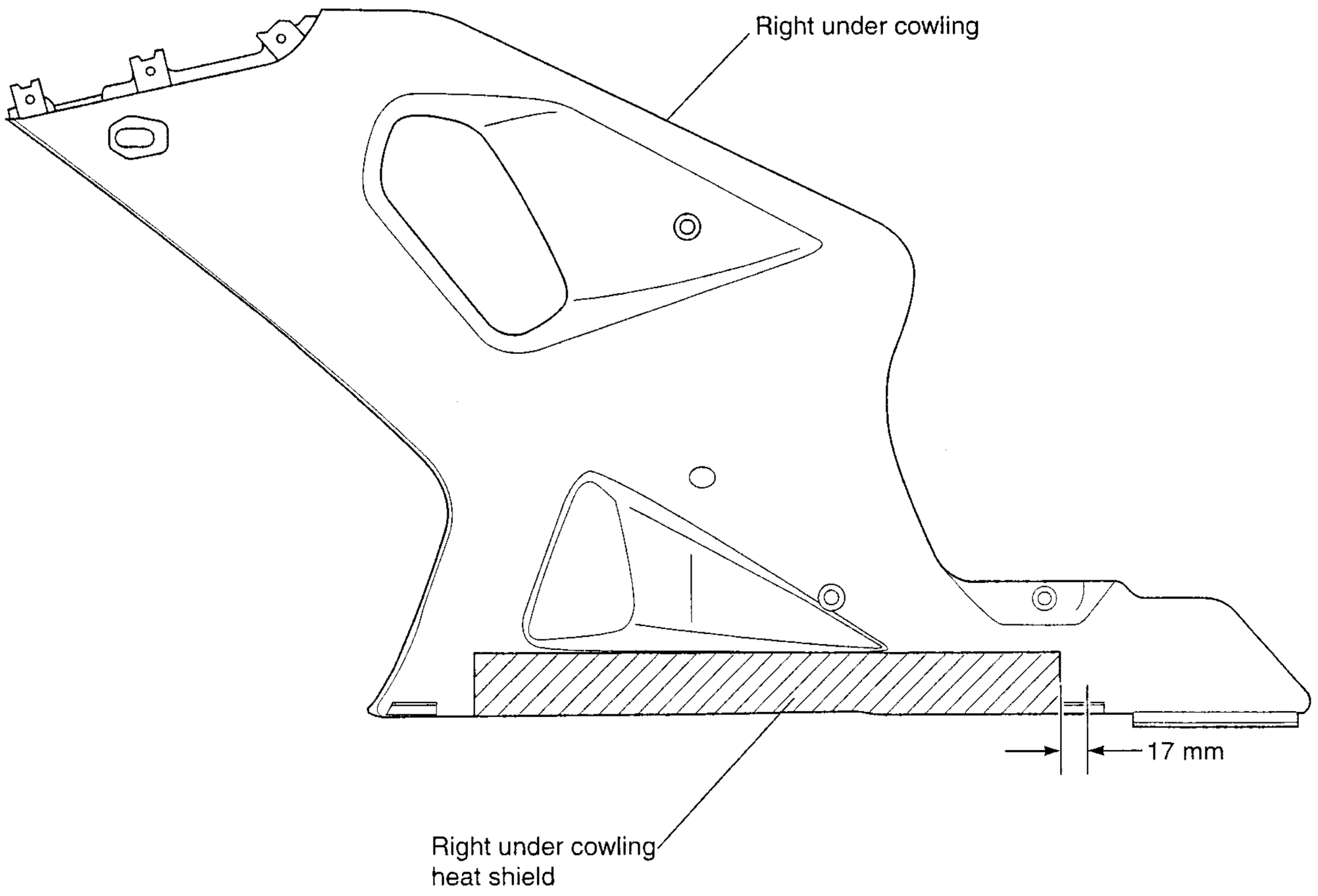

SIDE-STAND SET-UP

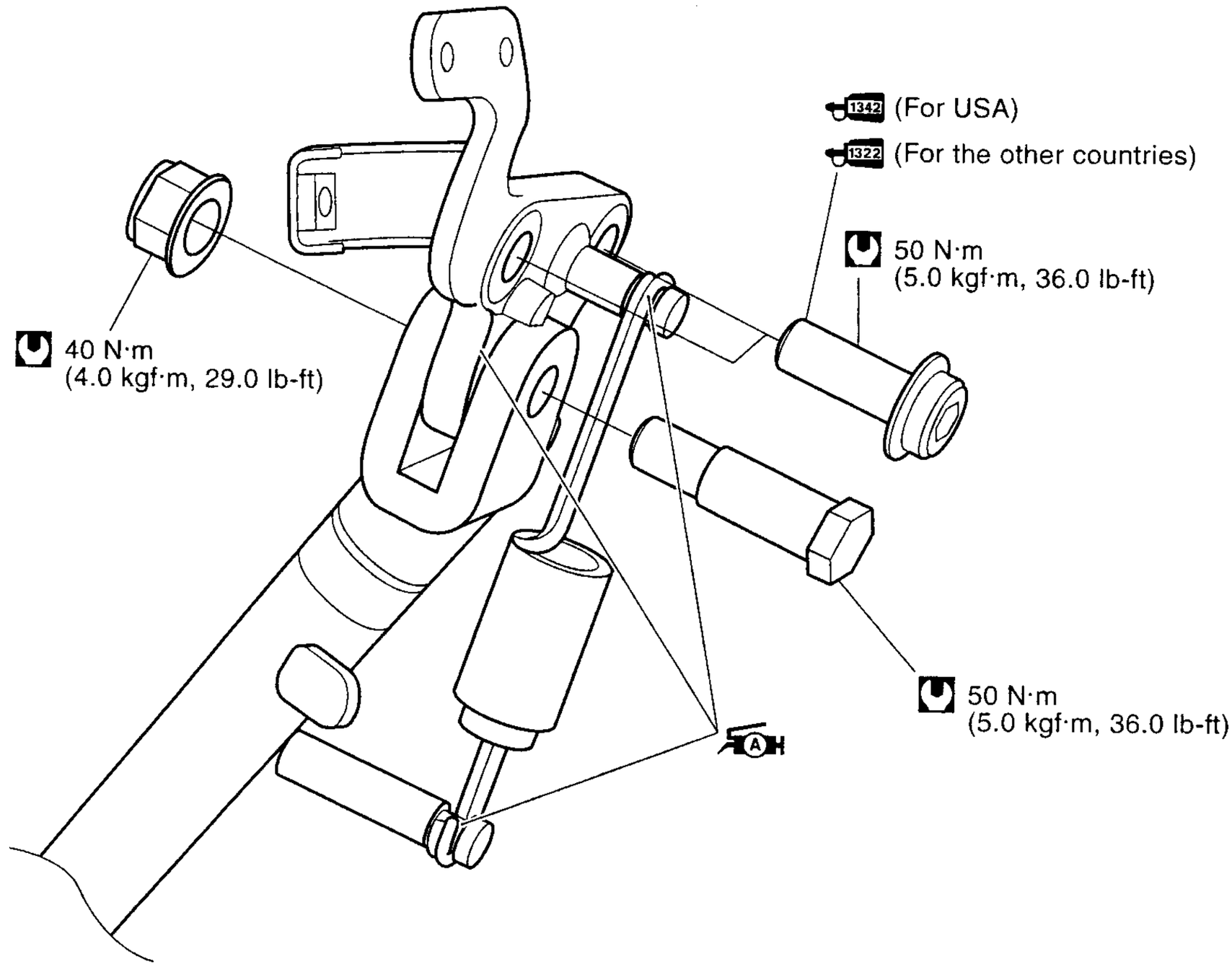

GEARSHIFT PEDAL SET-UP

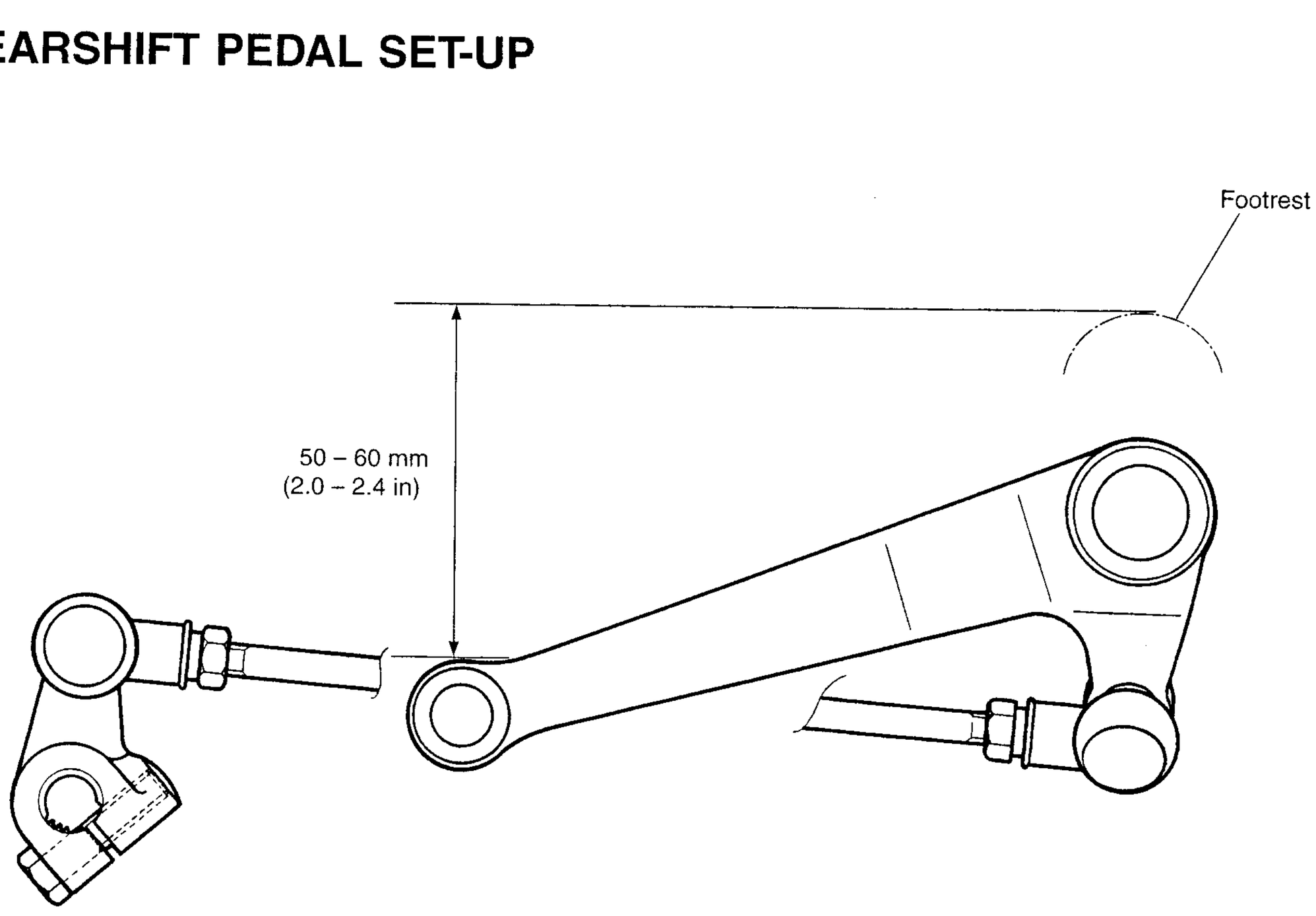

SEAT LOCK CABLE ROUTING

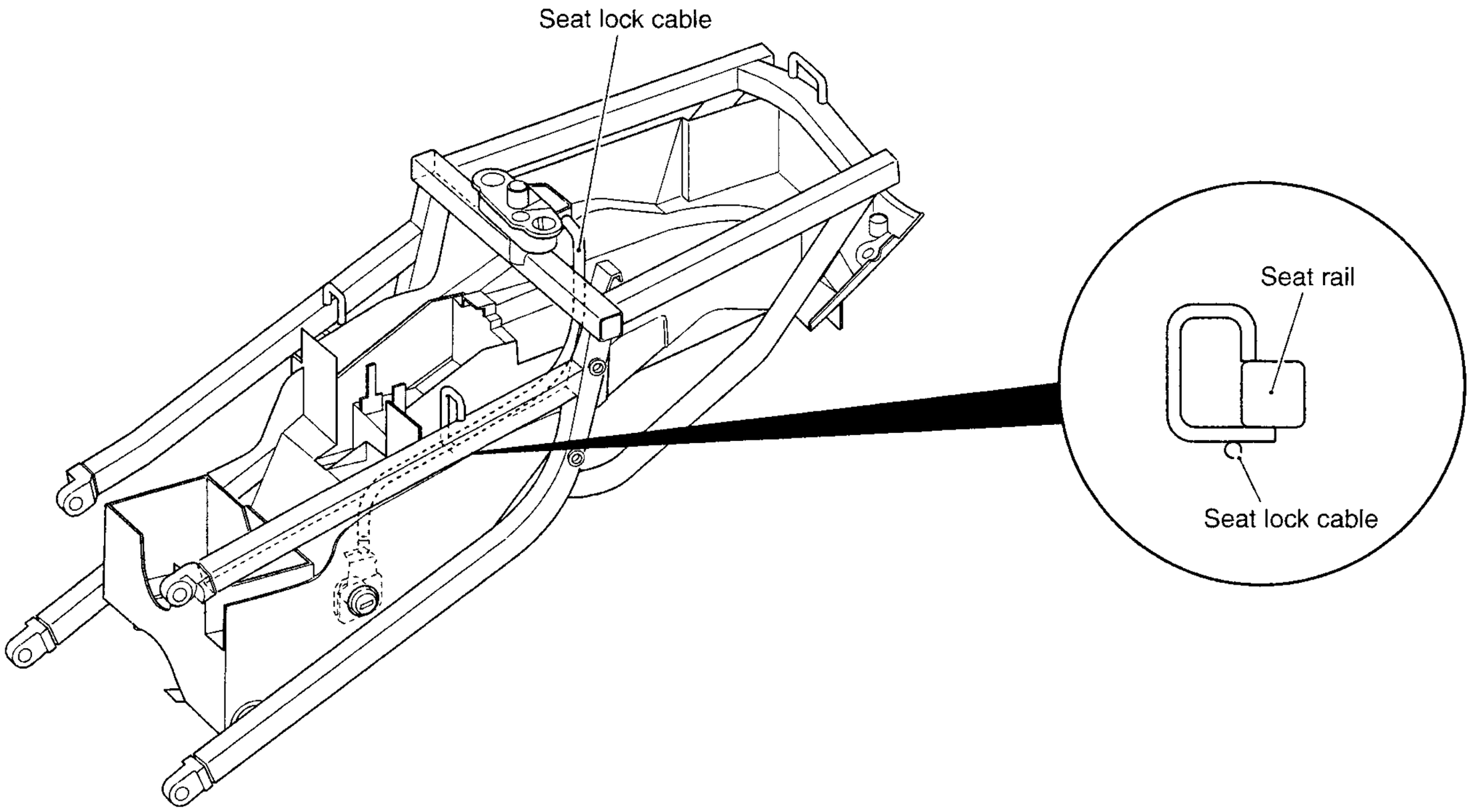

FRONT FENDER SET-UP

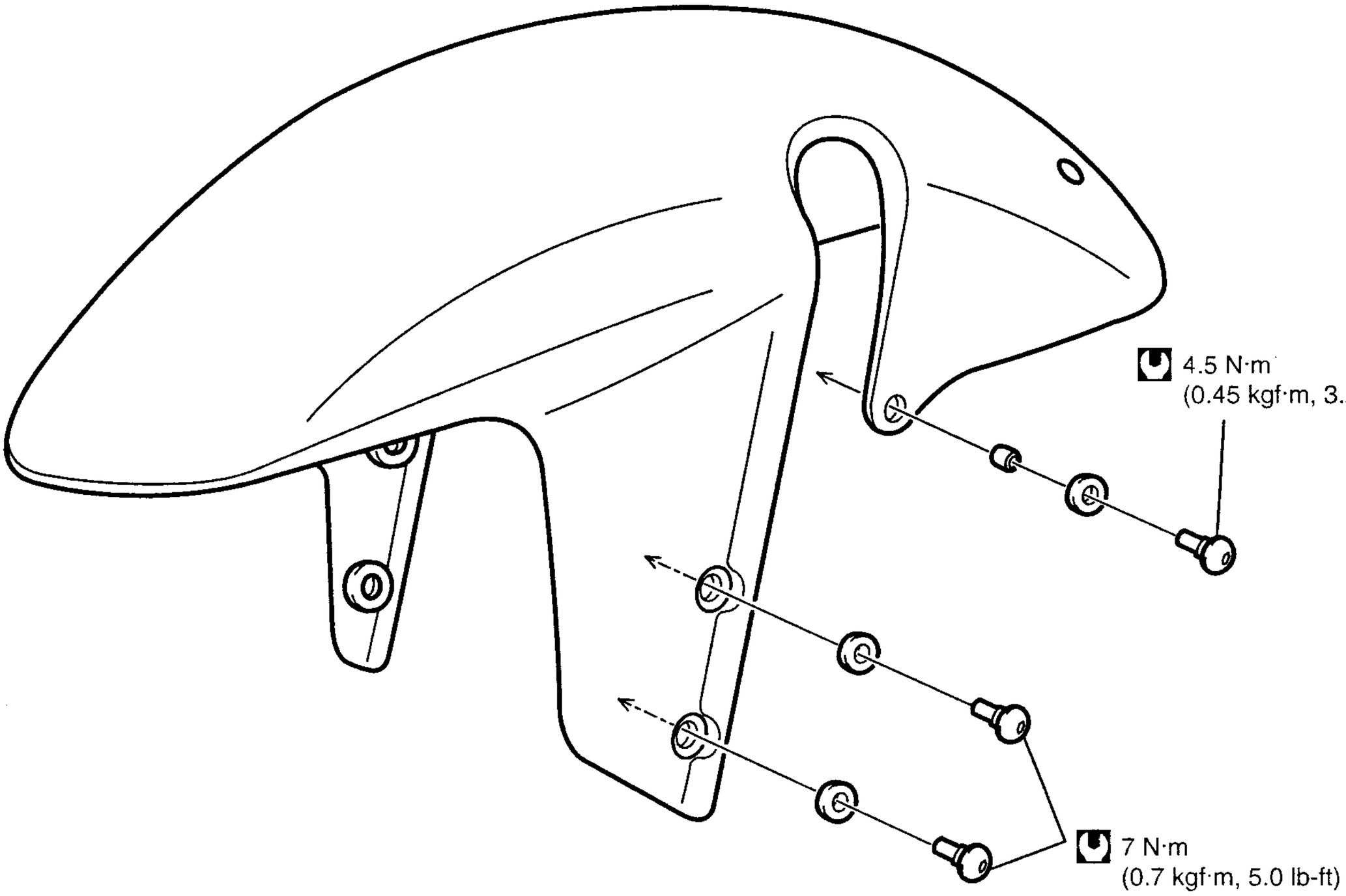

SPECIAL TOOLS

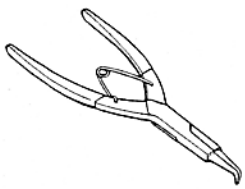 09900-06104 Snap ring pliers	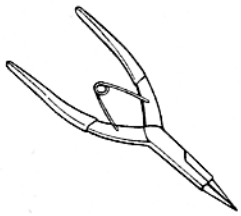 09900-06107 Snap ring pliers	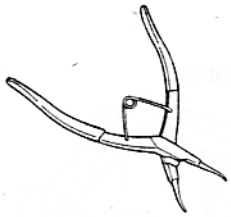 09900-06108 Snap ring pliers	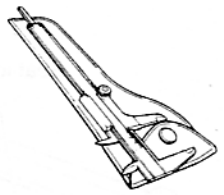 09900-20101 09900-20102 Vernier calipers	09900-20202 Micrometer (25 – 50 mm)
09900-20203 Micrometer (50 – 75 mm)	09900-20205 Micrometer (0 – 25 mm)	09900-20508 Cylinder gauge set	09900-20602 Dial gauge (1/1000 mm, 1 mm)	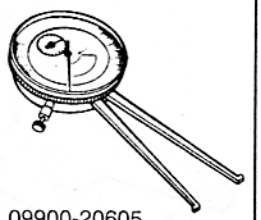 09900-20605 Dial calipers (1/100 mm, 10 – 34 mm)
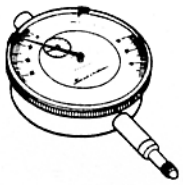 09900-20607 Dial gauge (1/100 mm, 10 mm)	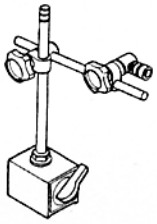 09900-20701 Magnetic stand	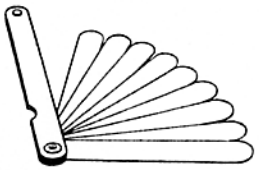 09900-20803 09900-20806 Thickness gauge	09900-20805 Tire depth gauge	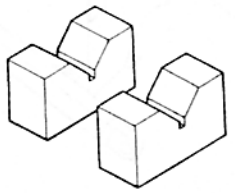 09900-21304 V-block (100 mm)
09900-22301 09900-22302 Plastigauge	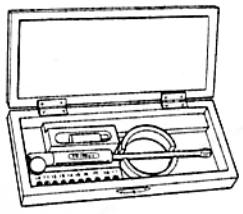 09900-22401 (10 – 18 mm) 09900-22403 (18 – 35 mm) Small bore gauge	09900-25008 Multi circuit tester set	09913-10750 Compression gauge adapter	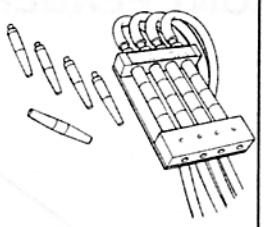 09913-13121 Carburetor balancer set
09913-50121 Oil seal remover	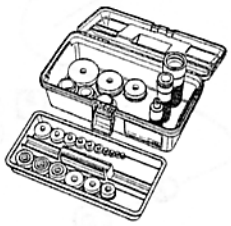 09913-70210 Bearing installer set	09915-40610 Oil filter wrench	09915-64510 Compression gauge	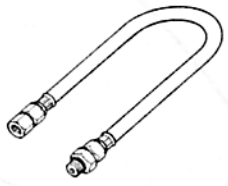 09915-74520 Oil pressure gauge hose

 09915-74540 Oil pressure gauge adaptor	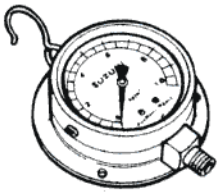 09915-77330 Meter (for high pressure)	 09916-10911 Valve lapper set	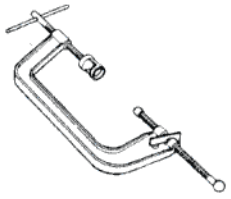 09916-14510 Valve spring compressor	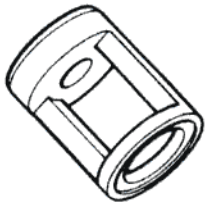 09916-14521 Valve spring compressor attachment
 09916-14530 Valve spring compressor attachment	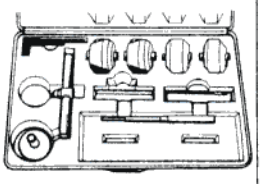 09916-21111 Valve seat cutter set	 09916-20630 Valve seat cutter head (N-126)	 09916-20650 Solid pilot (N-100 -4.0)	 09916-34542 Reamer handle
 09916-33310 Valve guide reamer (4.0 mm)	 09916-49030 Valve guide reamer (9.3 mm)	 09916-53310 Valve guide remover/installer	 09916-53321 Attachment	 09916-84511 Tweezers
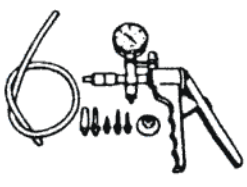 09917-47010 Vacuum pump gauge	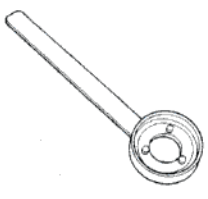 09920-34830 Starter clutch holder	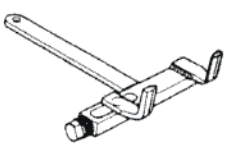 09920-53740 Clutch sleeve hub holder	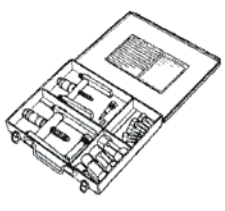 09921-20240 Bearing remover set	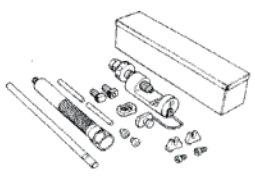 09922-22711 Drive chain cutting and joining tool
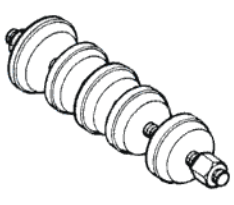 09924-84510 Bearing installer set	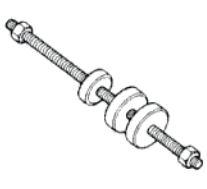 09924-84521 Bearing installer set	 09925-18011 Steering bearing installer	 09930-11920 Torx bit JT40H	 09930-11940 Bit holder

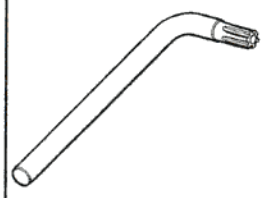

09930-11950
Torx wrench

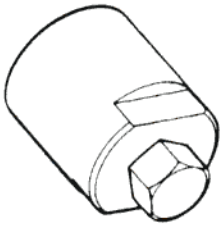

09930-34980
Rotor remover

09930-44520
Rotor holder

09930-82710
Mode selection switch

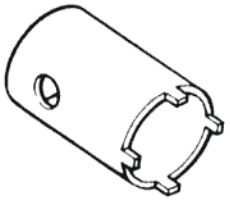

09940-14911
Steering stem nut wrench

09940-14960
Steering nut wrench socket

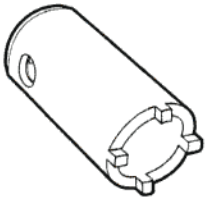

09940-14940
Swingarm pivot thrust adjuster socket wrench

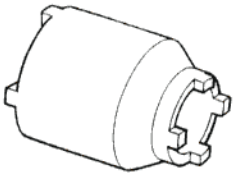

09940-14990
Engine mounting thrust adjuster socket wrench

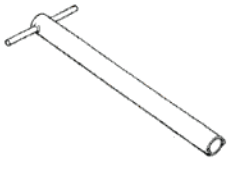

09940-30221
Front fork assembling tool

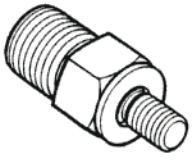

09940-40211
Fuel pressure gauge adaptor

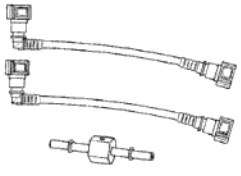

09940-40220
Fuel pressure gauge hose attachment

09940-50120
Front fork inner rod holder

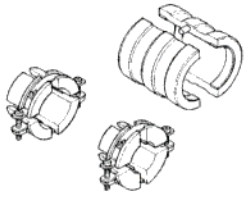

09940-52861
Front fork oil seal installer

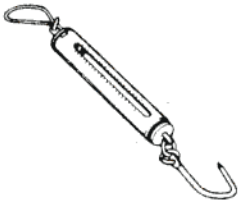

09940-92720
Spring scale

09940-94922
Front fork spring stopper plate

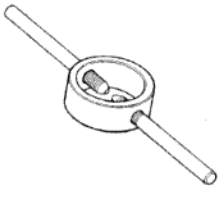

09940-94930
Front fork spacer holder

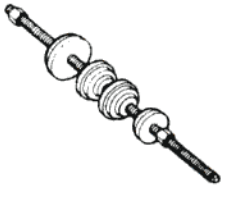

09941-34513
Steering race installer

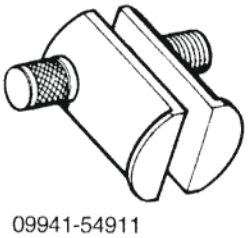

09941-54911
Bearing outer race remover

09941-74910
Bearing installer

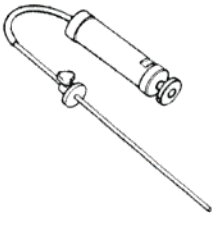

09943-74111
Fork oil level gauge

09944-60210
Wheel bearing remover

NOTE:
When order the special tool, please confirm whether it is available or not.

TIGHTENING TORQUE

ENGINE

ITEM		N·m	kgf·m	lb-ft
Exhaust pipe bolt		23	2.3	16.5
Muffler connecting bolt		23	2.3	16.5
Muffler mounting nut		23	2.3	16.5
Speed sensor rotor bolt		20	2.0	14.4
Engine sprocket nut		115	11.5	83.2
Engine mounting bolt and nut	(M:12)	75	7.5	54.0
	(M:10)	55	5.5	39.8
Engine mounting thrust adjuster		23	2.3	16.5
Engine mounting thrust adjuster lock nut		45	4.5	32.5
Engine mounting pinch bolt		23	2.3	16.5
Cylinder head cover bolt		14	1.4	10.0
Spark plug		11	1.1	8.0
Cam chain guide bolt		10	1.0	7.0
Camshaft journal holder bolt		10	1.0	7.0
Cam chain tension adjuster cap bolt		23	2.3	16.5
Cam chain tension adjuster mounting bolt		10	1.0	7.0
Cylinder head side bolt		14	1.4	10.0
Cam chain tensioner bolt		10	1.0	7.0
Cylinder head bolt	(M:10)	51	5.1	37.6
	(M:6)	10	1.0	7.0
PAIR reed valve cover bolt		10	1.0	7.0
Water jacket plug		9.5	0.95	6.9
Water inlet cover bolt		10	1.0	7.0
Clutch cover bolt		10	1.0	7.0
Clutch sleeve hub nut		150	15.0	108
Clutch spring set bolt		10	1.0	7.0
Starter clutch cover bolt		10	1.0	7.0
Starter idle gear cover bolt		10	1.0	7.0
Valve timing inspection plug		11	1.1	8.0
Starter clutch bolt		55	5.5	40.0
Generator cover bolt		10	1.0	7.0
Generator rotor bolt		120	12.0	88.5
Generator stator set bolt		10	1.0	7.0
Gearshift cam stopper bolt		10	1.0	7.0
Gearshift cam stopper plate bolt		10	1.0	7.0
Oil pressure switch		14	1.4	10.0
Crankcase bolt	(M:6)	11	1.1	8.0
	(M:8)	26	2.6	19.0
	(M:9) (Initial)	18	1.8	13.0
	(Final)	50°		
Oil gallery plug	(M:6) (M:10)	11	1.1	8.0
	(M:16)	35	3.5	26.5
Oil drain plug		23	2.3	16.5

ITEM		N·m	kgf·m	lb-ft
Piston cooling oil jet bolt		10	1.0	7.0
Oil pump mounting bolt		10	1.0	7.0
Conrod bearing cap bolt	(Initial)	21	2.1	15.1
	(Final)	90° (¼ turn)		
Bearing retainer screw		10	1.0	7.0
Breather cover bolt		10	1.0	7.0
Oil strainer bolt		10	1.0	7.0
Oil pan bolt		10	1.0	7.0
Oil cooler mounting bolt		10	1.0	7.0
Oil hose union bolt		10	1.0	7.0

FI SYSTEM AND INTAKE AIR SYSTEM

ITEM	N·m	kgf·m	lb-ft
Camshaft position sensor mounting bolt	8	0.8	6.0
Intake air temperature sensor	18	1.8	13.0
Fuel delivery pipe mounting screw	3.5	0.35	2.5
Fuel pump mounting bolt	10	1.0	7.0
Throttle body connecting bolt	6	0.6	4.5
STVA mounting bolt	3.5	0.35	2.5
TPS and STPS mounting screw	3.5	0.35	2.5
EXCVA mounting bolt	5	0.5	3.5
EXCVA pulley mounting bolt	5	0.5	3.5

COOLING SYSTEM

ITEM	N·m	kgf·m	lb-ft
Impeller securing bolt	8	0.8	6.0
Water pump cover bolt	6	0.6	4.5
Water pump mounting bolt	10	1.0	7.0
Cooling fan thermo-switch	17	1.7	12.5
Engine coolant temperature sensor	18	1.8	13.0
Thermostat case bolt	10	1.0	7.0

CHASSIS

ITEM	N·m	kgf·m	lb-ft
Steering stem head nut	90	9.0	65.0
Steering stem lock nut	80	8.0	58.0
Steering damper bolt and nut	23	2.3	16.5
Front fork upper clamp bolt	23	2.3	16.5
Front fork lower clamp bolt	23	2.3	16.5
Front fork cap bolt	23	2.3	16.5
Front fork inner rod lock nut	29	2.9	21.0
Front fork damper rod bolt	40	4.0	29.0
Front axle	100	10.0	72.5
Front axle pinch bolt	23	2.3	16.5
Handlebar clamp bolt	23	2.3	16.5
Handlebar set bolt	10	1.0	7.0
Front brake master cylinder mounting bolt	10	1.0	7.0
Front brake caliper mounting bolt	25	2.5	18.0
Front brake caliper housing bolt	21	2.1	15.0
Front brake pad mounting pin	16	1.6	11.5
Brake hose union bolt	23	2.3	16.5
Clutch lever holder mounting bolt	10	1.0	7.0
Air bleeder valve	8.0	0.8	6.0
Brake disc bolt (Front)	23	2.3	16.5
Brake disc bolt (Rear)	35	3.5	25.5
Rear brake caliper mounting bolt	25	2.5	18.0
Rear brake caliper housing bolt	37	3.7	27.0
Rear brake pad mounting pin	17	1.7	12.5
Rear brake master cylinder mounting bolt	10	1.0	7.0
Rear brake master cylinder rod lock nut	18	1.8	13.0
Front footrest bracket mounting bolt	23	2.3	16.5
Swingarm pivot shaft	15	1.5	11.0
Swingarm pivot nut	100	10.0	72.5
Swingarm pivot lock nut	90	9.0	65.0
Torque link nut (Front)	28	2.8	20.5
Torque link nut (Rear)	34	3.4	24.5
Cushion lever mounting nut	78	7.8	56.5
Cushion rod mounting nut	78	7.8	56.5
Rear shock absorber mounting bolt and nut (Upper and Lower)	50	5.0	36.0
Rear axle nut	100	10.0	72.5
Rear sprocket nut	60	6.0	43.5
Side-stand mounting bracket bolt	50	5.0	36.0
Cowling brace bolt and nut	25	2.5	18.0
Rear shock absorber bracket nut	115	11.5	83.0
Seat rail bolt	50	5.0	36.0

TIGHTENING TORQUE CHART

For other bolts and nuts listed previously, refer to this chart:

Bolt Diameter Ⓐ (mm)	Conventional or "4" marked bolt			"7" marked bolt		
	N·m	kgf·m	lb-ft	N·m	kgf·m	lb-ft
4	1.5	0.15	1.0	2.3	0.23	1.5
5	3	0.3	2.0	4.5	0.45	3.0
6	5.5	0.55	4.0	10	1.0	7.0
8	13	1.3	9.5	23	2.3	16.5
10	29	2.9	21.0	50	5.0	36.0
12	45	4.5	32.5	85	8.5	61.5
14	65	6.5	47.0	135	13.5	97.5
16	105	10.5	76.0	210	21.0	152.0
18	160	16.0	115.5	240	24.0	173.5

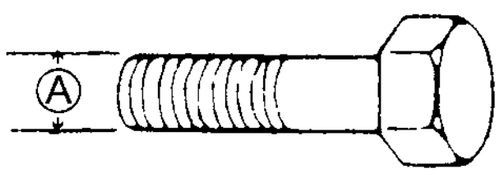

Conventional bolt

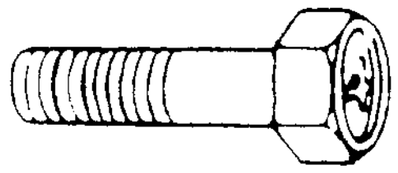

"4" marked bolt

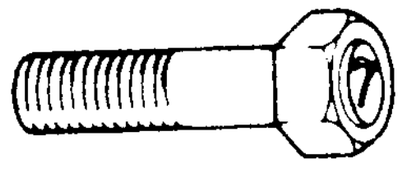

"7" marked bolt

SERVICE DATA

VALVE + GUIDE

Unit: mm (in)

ITEM	STD/SPEC.		LIMIT
Valve diam.	IN.	29 (1.14)	———
	EX.	24 (0.94)	———
Valve clearance (when cold)	IN.	0.10 – 0.20 (0.004 – 0.008)	———
	EX.	0.20 – 0.30 (0.008 – 0.012)	———
Valve guide to valve stem clearance	IN.	0.010 – 0.037 (0.0004 – 0.0015)	———
	EX.	0.030 – 0.057 (0.0012 – 0.0022)	———
Valve guide I.D.	IN. & EX.	4.000 – 4.012 (0.1575 – 0.1580)	———
Valve stem O.D.	IN.	3.975 – 3.990 (0.1565 – 0.1571)	———
	EX.	3.955 – 3.970 (0.1557 – 0.1563)	———
Valve stem deflection	IN. & EX.	———	0.35 (0.014)
Valve stem runout	IN. & EX.	———	0.05 (0.002)
Valve head thickness	IN. & EX.	———	0.5 (0.02)
Valve seat width	IN. & EX.	0.9 – 1.1 (0.035 – 0.043)	———
Valve head radial runout	IN. & EX.	———	0.03 (0.001)
Valve spring free length	IN. & EX.	———	37.0 (1.46)
Valve spring tension	IN. & EX.	127 – 147 N, 13.0 – 15.0 kgf (28.7 – 33.1 lbs) at length 32.5 mm (1.28 in)	———

CAMSHAFT + CYLINDER HEAD

Unit: mm (in)

ITEM	STD/SPEC.		LIMIT
Cam height	IN.	37.01 – 37.05 (1.457 – 1.459)	36.71 (1.445)
	EX.	35.98 – 36.02 (1.417 – 1.418)	35.68 (1.405)
Camshaft journal oil clearance	IN. & EX.	0.032 – 0.066 (0.0013 – 0.0026)	0.150 (0.0059)
Camshaft journal holder I.D.	IN. & EX.	24.012 – 24.025 (0.9454 – 0.9459)	———

ITEM	STD/SPEC.		LIMIT
Camshaft journal O.D.	IN. & EX.	23.959 – 23.980 (0.9433 – 0.9441)	———
Camshaft runout	———		0.10 (0.004)
Cam chain pin (at arrow "3")	14th pin		———
Cylinder head distortion	———		0.20 (0.008)

CYLINDER + PISTON + PISTON RING

Unit: mm (in)

ITEM	STD/SPEC.			LIMIT
Compression pressure	1 300 – 1 700 kPa (13 – 17 kgf/cm² 185 – 242 psi)			1 000 kPa (10 kgf/cm² 142 psi)
Compression pressure difference	———			200 kPa (2 kgf/cm² 28 psi)
Piston to cylinder clearance	0.030 – 0.040 (0.0011 – 0.0015)			0.120 (0.0047)
Cylinder bore	73.000 – 73.015 (2.8740 – 2.8746)			Nicks or Scratches
Piston diam.	72.965 – 72.980 (2.8726 – 2.8732) Measure at 15 mm (0.6 in) from the skirt end.			72.880 (2.8693)
Cylinder distortion	———			0.20 (0.008)
Piston ring free end gap	1st	R	Approx. 7.2 (0.28)	5.8 (0.23)
	2nd	RN	Approx. 10.2 (0.40)	8.2 (0.32)
Piston ring end gap	1st	R	0.06 – 0.18 (0.003 – 0.008)	0.50 (0.020)
	2nd	RN	0.06 – 0.18 (0.003 – 0.008)	0.50 (0.020)
Piston ring to groove clearance	1st	———		0.180 (0.0071)
	2nd	———		0.150 (0.0059)
Piston ring groove width	1st	1.01 – 1.03 (0.0398 – 0.0406)		———
	2nd	0.81 – 0.83 (0.0319 – 0.0327)		———
	Oil	1.51 – 1.53 (0.0594 – 0.0602)		———
Piston ring thickness	1st	0.97 – 0.99 (0.0382 – 0.0390)		———
	2nd	0.77 – 0.79 (0.0303 – 0.0311)		———
Piston pin bore	16.002 – 16.008 (0.6300 – 0.6302)			16.030 (0.6311)
Piston pin O.D.	15.995 – 16.000 (0.6297 – 0.6299)			15.980 (0.6291)

CONROD + CRANKSHAFT

Unit: mm (in)

ITEM	STD/SPEC.		LIMIT
Conrod small end I.D.	16.010 – 16.018 (0.6303 – 0.6306)		16.040 (0.6315)
Conrod big end side clearance	0.10 – 0.20 (0.004 – 0.008)		0.30 (0.012)
Conrod big end width	19.95 – 20.00 (0.7854 – 0.7874)		———
Crank pin width	20.10 – 20.15 (0.7913 – 0.7933)		———
Conrod big end oil clearance	0.032 – 0.056 (0.0013 – 0.0022)		0.080 (0.0031)
Crank pin O.D.	34.976 – 35.000 (1.3770 – 1.3780)		———
Crankshaft journal oil clearance	0.016 – 0.040 (0.0006 – 0.0016)		0.080 (0.0031)
Crankshaft journal O.D.	34.976 – 35.000 (1.3770 – 1.3780)		———
Crankshaft thrust bearing thickness	Right side	2.420 – 2.440 (0.0953 – 0.0961)	———
	Left side	2.260 – 2.500 (0.0890 – 0.0984)	———
Crankshaft thrust clearance	0.070 – 0.110 (0.0028 – 0.0043)		———
Crankshaft runout	———		0.05 (0.002)

BALANCER

Unit: mm (in)

ITEM	STD/SPEC.	LIMIT
Balancer journal oil clearance	0.020 – 0.044 (0.00079 – 0.00173)	0.080 (0.00315)
Balancer journal O.D.	22.984 – 23.000 (0.9049 – 0.9055)	———

OIL PUMP

ITEM	STD/SPEC.	LIMIT
Oil pressure (at 60°C, 140°F)	100 – 400 kPa (1.0 – 4.0 kgf/cm^2, 14 – 57 psi) at 3 000 r/min.	———

CLUTCH

Unit: mm (in)

ITEM	STD/SPEC.		LIMIT
Clutch lever play	10 – 15 (0.4 – 0.6)		———
Clutch release screw	¼ turn back		———
Drive plate thickness	No. 1, 2 and 3	2.72 – 2.88 (0.107 – 0.113)	2.42 (0.095)
Drive plate claw width	No. 1, 2 and 3	13.85 – 13.96 (0.5453 – 0.5496)	13.05 (0.5138)
Driven plate distortion	———		0.10 (0.004)
Clutch spring free height	77.77 (3.062)		73.9 (2.909)

TRANSMISSION + DRIVE CHAIN

Unit: mm (in) Except ratio

ITEM		STD/SPEC.	LIMIT
Primary reduction ratio		1.553 (73/47)	———
Final reduction ratio		2.470 (42/17)	———
Gear ratios	Low	2.687 (43/16)	———
	2nd	2.052 (39/19)	———
	3rd	1.681 (37/22)	———
	4th	1.450 (29/20)	———
	5th	1.304 (30/23)	———
	Top	1.208 (29/24)	———
Shift fork to groove clearance		0.10 – 0.30 (0.004 – 0.012)	0.50 (0.020)
Shift fork groove width		5.0 – 5.1 (0.197 – 0.201)	———
Shift fork thickness		4.8 – 4.9 (0.189 – 0.193)	———
Drive chain	Type	DID50V4	———
	Links	110 links	———
	20-pitch length	———	319.4 (12.57)
Drive chain slack (on side-stand)		20 – 30 (0.79 – 1.18)	———
Gearshift lever height		50 – 60 (2.0 – 2.4)	———

THERMOSTAT + RADIATOR + FAN + COOLANT

ITEM	STD/SPEC.		LIMIT
Thermostat valve opening temperature	Approx. 82°C (180 °F)		———
Thermostat valve lift	Over 8 mm (0.31 in) at 95°C (203°F)		———
Engine coolant temperature sensor resistance	20°C (68°F)	Approx. 2.45 kΩ	———
	50°C (122°F)	Approx. 0.811 kΩ	———
	80°C (176°F)	Approx. 0.318 kΩ	———
	110°C (230°F)	Approx. 0.142 kΩ	———
	130°C (226°F)	Approx. 0.088 kΩ	———
Radiator cap valve opening pressure	95 – 125 kPa (0.95 – 1.25 kgf/cm^2, 13.5 – 17.8 psi)		———
Cooling fan thermo-switch operating temperature	OFF → ON	Approx. 105°C (221°F)	———
	ON → OFF	Approx. 100°C (212°F)	———
Engine coolant type	Use an antifreeze/coolant compatible with aluminum radiator, mixed with distilled water only, at the ratio of 50:50.		———
Engine coolant	Reserve tank side	Approx. 250 ml (0.3/0.2 US/Imp qt)	———
	Engine side	Approx. 2 150 ml (2.3/1.9 US/Imp qt)	———

INJECTOR + FUEL PUMP + FUEL PRESSURE REGULATOR

ITEM	STD/SPEC.	NOTE
Injector resistance	11 – 16 Ω at 20°C (68°F)	
Fuel pump discharge amount	Approx. 1.2 L (1.3/1.1 US/Imp qt) /30 sec.	
Fuel pressure regulator operating set pressure	Approx. 300 kPa (3.0 kgf/cm², 43 psi)	

FI SENSORS + SECONDARY THROTTLE VALVE ACTUATOR

ITEM	STD/SPEC.		NOTE
CMP sensor resistance	0.9 – 1.7 kΩ		
CMP sensor peak voltage	More than 0.7 V		
CKP sensor resistance	70 – 220 Ω		
CKP sensor peak voltage	More than 0.5 V		
IAP sensor input voltage	4.5 – 5.5 V		
IAP sensor output voltage	Approx. 2.64 V at idle speed		
TP sensor input voltage	4.5 – 5.5 V		
TP sensor resistance	Closed	Approx. 1.1 kΩ	
	Opened	Approx. 4.3 kΩ	
TP sensor output voltage	Closed	Approx. 1.1 V	
	Opened	Approx. 4.3 V	
ECT sensor input voltage	4.5 – 5.5 V		
ECT sensor resistance	2.3 – 2.6 kΩ at 20°C (68°F)		
IAT sensor input voltage	4.5 – 5.5 V		
IAT sensor resistance	2.2 – 2.7 kΩ at 20°C (68°F)		
AP sensor input voltage	4.5 – 5.5 V		
AP sensor output voltage	Approx. 3.6 V at 100 kPa (760 mmHg)		
TO sensor resistance	60 – 64 kΩ		
TO sensor voltage	Approx. 2.5 V		
GP switch voltage	More than 0.6 V (From 1st to Top)		
Injector voltage	Battery voltage		
Ignition coil primary peak voltage	More than 80 V (When cranking)		
STP sensor input voltage	4.5 – 5.5 V		
STP sensor resistance	Closed	Approx. 0.5 kΩ	
	Opened	Approx. 3.9 kΩ	
STP sensor output voltage	Closed	Approx. 0.5 V	
	Opened	Approx. 3.7 V	
STV actuator resistance	Approx. 6.5 Ω		
EXCVA position sensor input voltage	4.5 – 5.5 V		
EXCVA position sensor resistance	Approx. 3.1 kΩ (At adjustment position)		
EXCVA position sensor output voltage	Closed	More than 0.2 V	
	Opened	Less than 4.8 V	

THROTTLE BODY

ITEM	STD/SPEC.
Bore size	38 mm
I.D. No.	40F1 (For E-33), 40F0 (For the others)
Idle r/min.	1 150 ± 100 r/min.
Fast idle r/min.	2 200 r/min. (After warming up)
Throttle cable play	2.0 – 4.0 mm (0.08 – 0.16 in)

ELECTRICAL

Unit: mm (in)

ITEM			STD/SPEC.	NOTE
Firing order			1·2·4·3	
Spark plug		Type	NGK: CR9E DENSO: U27ESR-N	
		Gap	0.7 – 0.8 (0.028 – 0.031)	
Spark performance			Over 8 (0.3) at 1 atm.	
CKP sensor resistance			70 – 220 Ω	
CKP sensor peak voltage			More than 0.5 V	
Ignition coil resistance		Primary	0.8 – 2.0 Ω	Terminal – Terminal
		Secondary	8 – 15 kΩ	Plug cap – Terminal
Ignition coil primary peak voltage			More than 80 V	
Generator coil resistance			0.2 – 0.9 Ω	
Generator no-load voltage (when engine is cold)			More than 65 V (AC) at 5 000 r/min.	
Regulated voltage			14.0 – 15.0 V at 5 000 r/min.	
Starter relay resistance			3 – 5 Ω	
GP switch voltage			More than 0.6 V (From 1st to top without neutral)	
Battery	Type designation		FTX12-BS	
	Capacity		12 V 36 kC (10 Ah)/10 HR	
Fuse size	Headlight	HI	15 A	
		LO	15 A	
	Signal		15 A	
	Ignition		15 A	
	Fuel		10 A	
	Fan		10 A	
	Main		30 A	

WATTAGE

ITEM		STD/SPEC.	
		E-03, -24, -28, -33	For the other countries
Headlight	HI	60 W	55/55 W
	LO	55 W	←
Parking or position light			5 W
Brake light/Taillight		21/5 W × 2	←
Turn signal light		21 W × 4	←
Combination meter light		LED	←
Turn signal indicator light		LED	←
High beam indicator light		LED	←
Neutral indicator light		LED	←
FI indicator light/Oil pressure indicator light/Engine coolant temp. indicator light		LED	←
Fuel level indicator light		LED	←

BRAKE + WHEEL

Unit: mm (in)

ITEM	STD/SPEC.			LIMIT
Rear brake pedal height	50 – 60 (2.0 – 2.4)			———
Brake disc thickness	Front	4.8 – 5.2 (0.189 – 0.205)		4.5 (0.177)
	Rear	4.8 – 5.2 (0.189 – 0.205)		4.5 (0.177)
Brake disc runout	———			0.30 (0.012)
Master cylinder bore	Front	15.870 – 15.913 (0.6248 – 0.6265)		———
	Rear	12.700 – 12.743 (0.5000 – 0.5017)		———
Master cylinder piston diam.	Front	15.827 – 15.854 (0.6231 – 0.6242)		———
	Rear	12.657 – 12.684 (0.4983 – 0.4994)		———
Brake caliper cylinder bore	Front	Leading	24.000 – 24.076 (0.9449 – 0.9479)	———
		Trailing	27.000 – 27.076 (1.0630 – 1.0660)	———
	Rear	38.180 – 38.230 (1.5031 – 1.5051)		———
Brake caliper piston diam.	Front	Leading	23.925 – 23.975 (0.9419 – 0.9439)	———
		Trailing	26.920 – 26.970 (1.0598 – 1.0618)	———
	Rear	38.060 – 38.093 (1.4984 – 1.4997)		———
Brake fluid type	DOT 4			———

ITEM	STD/SPEC.		LIMIT
Wheel rim runout	Axial	———	2.0 (0.08)
	Radial	———	2.0 (0.08)
Wheel rim size	Front	17 × MT 3.50	———
	Rear	17 × MT 6.00	———
Wheel axle runout	Front	———	0.25 (0.010)
	Rear	———	0.25 (0.010)

TIRE

Unit: mm (in)

ITEM	STD/SPEC.		LIMIT
Cold inflation tire pressure (Solo riding)	Front	250 kPa (2.50 kgf/cm², 36 psi)	———
	Rear	290 kPa (2.90 kgf/cm², 42 psi)	———
Cold inflation tire pressure (Dual riding)	Front	250 kPa (2.50 kgf/cm², 36 psi)	———
	Rear	290 kPa (2.90 kgf/cm², 42 psi)	———
Tire size	Front	120/70 ZR17 (58W)	———
	Rear	190/50 ZR17 (73W)	———
Tire type	Front	BRIDGESTONE: BT011F E	———
	Rear	BRIDGESTONE: BT010R E	———
Tire tread depth (Recommended depth)	Front	———	1.6 (0.06)
	Rear	———	2.0 (0.08)

SUSPENSION

Unit: mm (in)

ITEM	STD/SPEC.		LIMIT
Front fork stroke	120 (4.72)		———
Front fork spring free length	235.8 (9.28)		231 (9.09)
Front fork oil level (without spring, outer tube fully compressed)	90 (3.54)		———
Front fork oil type	SUZUKI FORK OIL L01 or an equivalent fork oil		———
Front fork oil capacity (each leg)	517 ml (17.5/18.2 US/Imp oz)		———
Front fork spring adjuster	4th groove from top		———
Front fork damping force adjuster	Rebound	6 clicks out from stiffest position	———
	Compression	10 clicks out from stiffest position	———
Rear shock absorber spring pre-set length	177 (6.97)		———
Rear shock absorber damping force adjuster	Rebound	7 clicks out from stiffest position	———
	Compression	8 clicks out from stiffest position	———

ITEM	STD/SPEC.	LIMIT
Rear wheel travel	130 (5.1)	———
Swingarm pivot shaft runout	———	0.3 (0.01)

FUEL + OIL

ITEM	STD/SPEC.		NOTE
Fuel type	Use only unleaded gasoline of at least 90 pump octane ($\frac{R+M}{2}$). Gasoline containing MTBE (Methyl Tertiary Butyl Ether), less than 10% ethanol, or less than 5% methanol with appropriate cosolvents and corrosion inhibitor is permissible.		E-03, 28, 33
	Gasoline used should be graded 95 octane or higher. An unleaded gasoline is recommended.		The others
Fuel tank capacity	including reserve	18 L (4.8/4.0 US/Imp gal)	
	Fuel level indicator light flickering	Approx. 4.0 L (1.1/0.9 US/Imp gal)	
	Fuel level indicator light lighting	Approx. 2.0 L (0.5/0.4 US/Imp gal)	
Engine oil type	SAE 10W/40, API, SF or SG		
Engine oil capacity	Change	3.0 L (3.2/2.6 US/Imp qt)	
	Filter change	3.3 L (3.5/2.9 US/Imp qt)	
	Overhaul	3.6 L (3.8/3.2 US/Imp qt)	

EMISSION CONTROL INFORMATION

CONTENTS

FUEL INJECTION SYSTEM 9- 2
EVAPORATIVE EMISSION CONTROL SYSTEM 9- 2
CANISTER HOSE ROUTING 9- 3
EVAPORATIVE EMISSION CONTROL SYSTEM INSPECTION 9- 4
PAIR (AIR SUPPLY) SYSTEM DIAGRAM 9- 5
PAIR (AIR SUPPLY) SYSTEM HOSE ROUTING 9- 6
PAIR (AIR SUPPLY) SYSTEM INSPECTION 9- 7

FUEL INJECTION SYSTEM

GSX-R1000 motorcycles are equipped with a fuel injection system for emission level control.
This fuel injection system is precision designed, manufactured and adjusted to comply with the applicable emission limits.

EVAPORATIVE EMISSION CONTROL SYSTEM (Only for E-33)

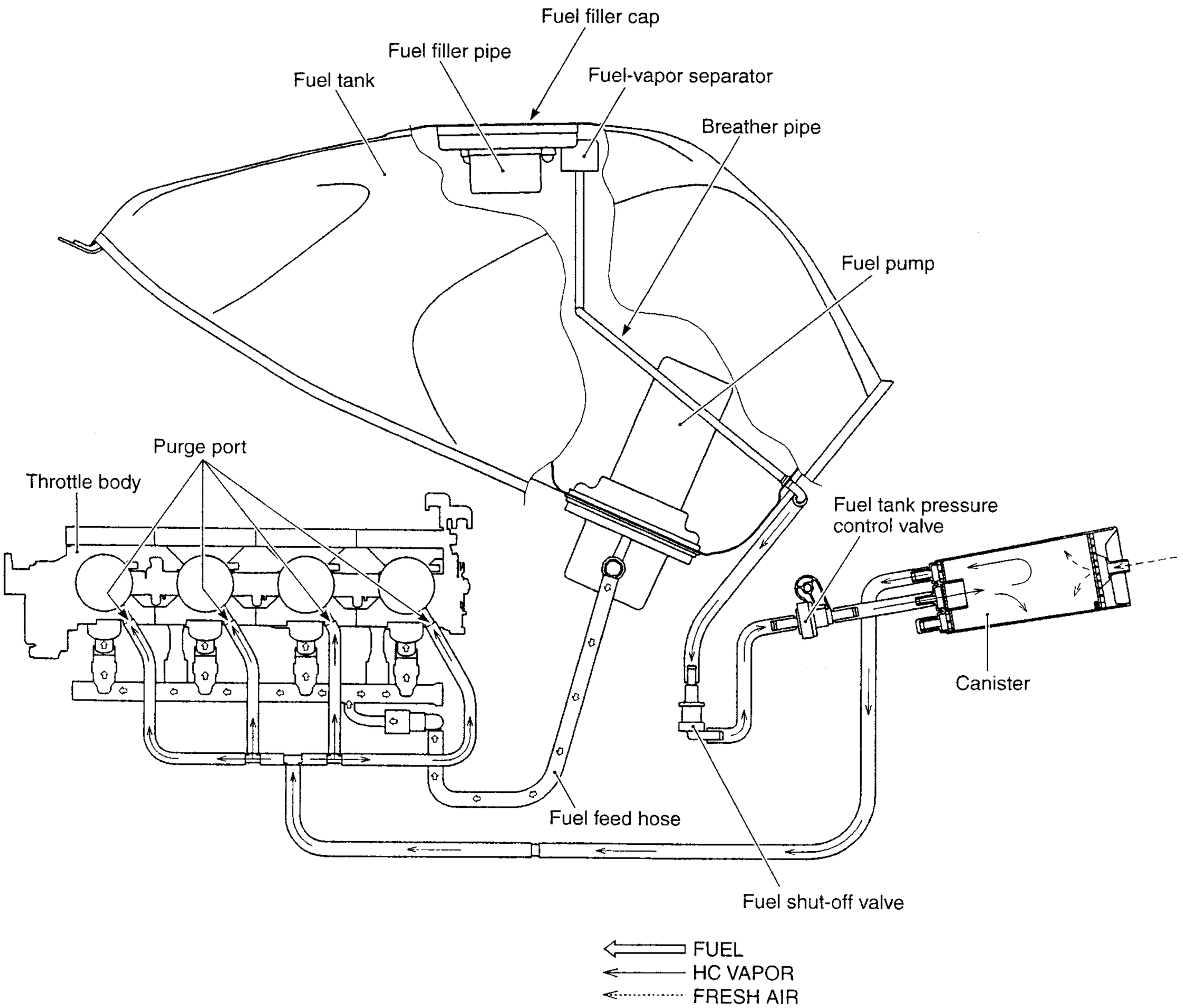

CANISTER HOSE ROUTING (Only for E-33)

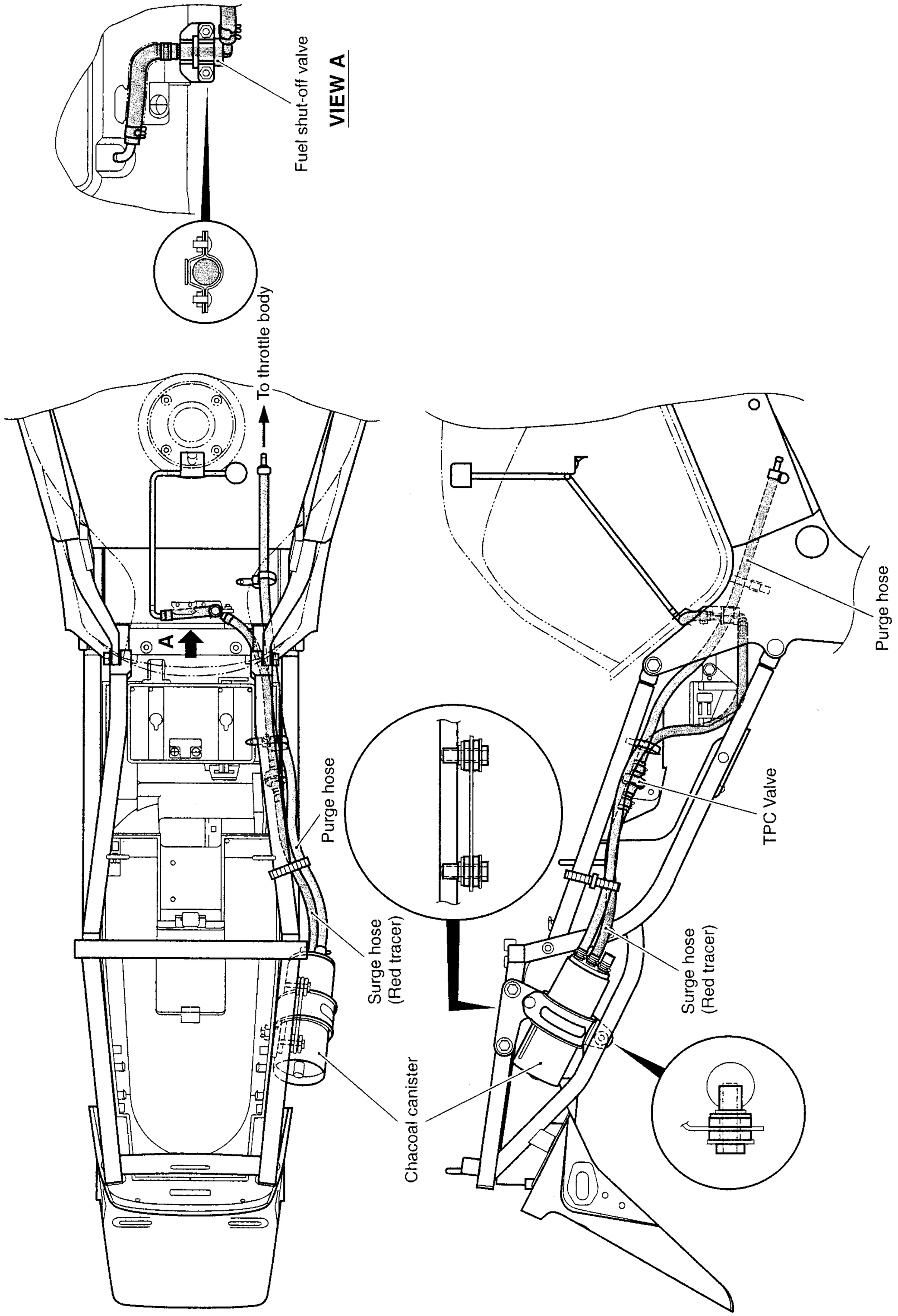

EVAPORATIVE EMISSION CONTROL SYSTEM INSPECTION (Only for E-33)

- Remove the seats and frame cover.
- Remove the fuel tank. (☞4-56)

HOSES

Inspect the hoses for wear or damage.
Make sure that the hoses are securely connected.

CANISTER

Inspect the canister for damage to the body.

TANK PRESSURE CONTROL VALVE

Inspect the tank pressure contorol valve body for damage.
Inspect the tank pressure control valve operation as following procedure.

- Remove the tank pressure control valve.
- When air pressure is applied to the tank pressure control valve from the side Ⓐ, there should be flow out through the purge control valve.
- When air pressure is applied to the tank pressure control valve from the side Ⓑ, there should be hard to flow through the purge valve.
- If operation differs from that listed above, the tank pressure control valve must be replaced.

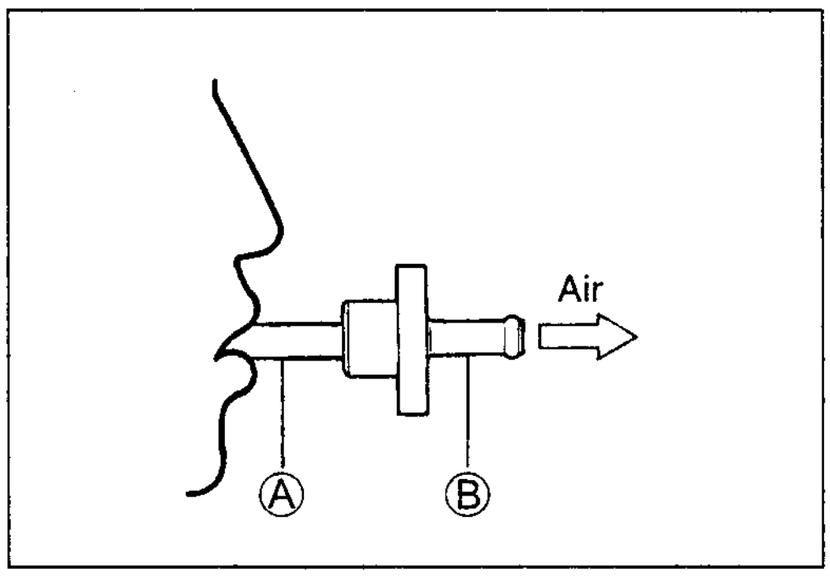

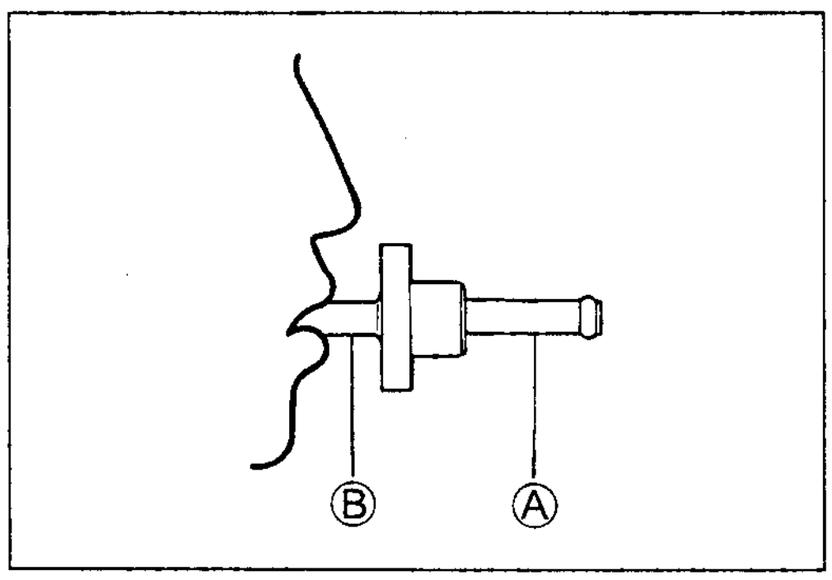

⚠ WARNING

Gasoline and gasoline vapor is toxic. A small amount of fuel is remaining in the tank pressure control valve, when checking it.
Do not swallow the fuel when blowing the tank pressure control valve.

NOTE:

When connecting the tank pressure control valve to the hose, the side Ⓑ should face toward the fuel shut-off valve side, and the side Ⓐ should face toward the canister side.

PAIR (AIR SUPPLY) SYSTEM DIAGRAM

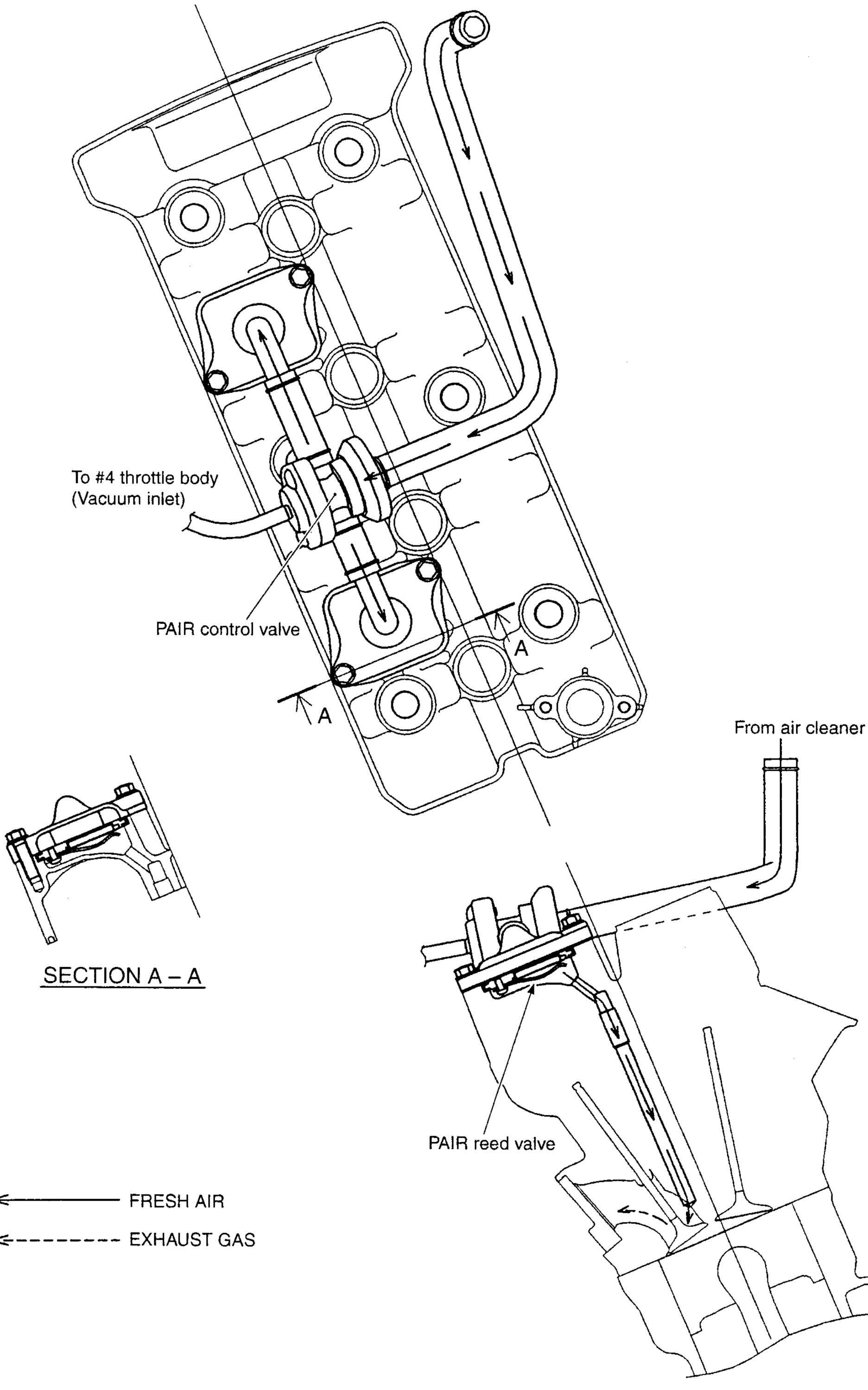

PAIR (AIR SUPPLY) SYSTEM HOSE ROUTING

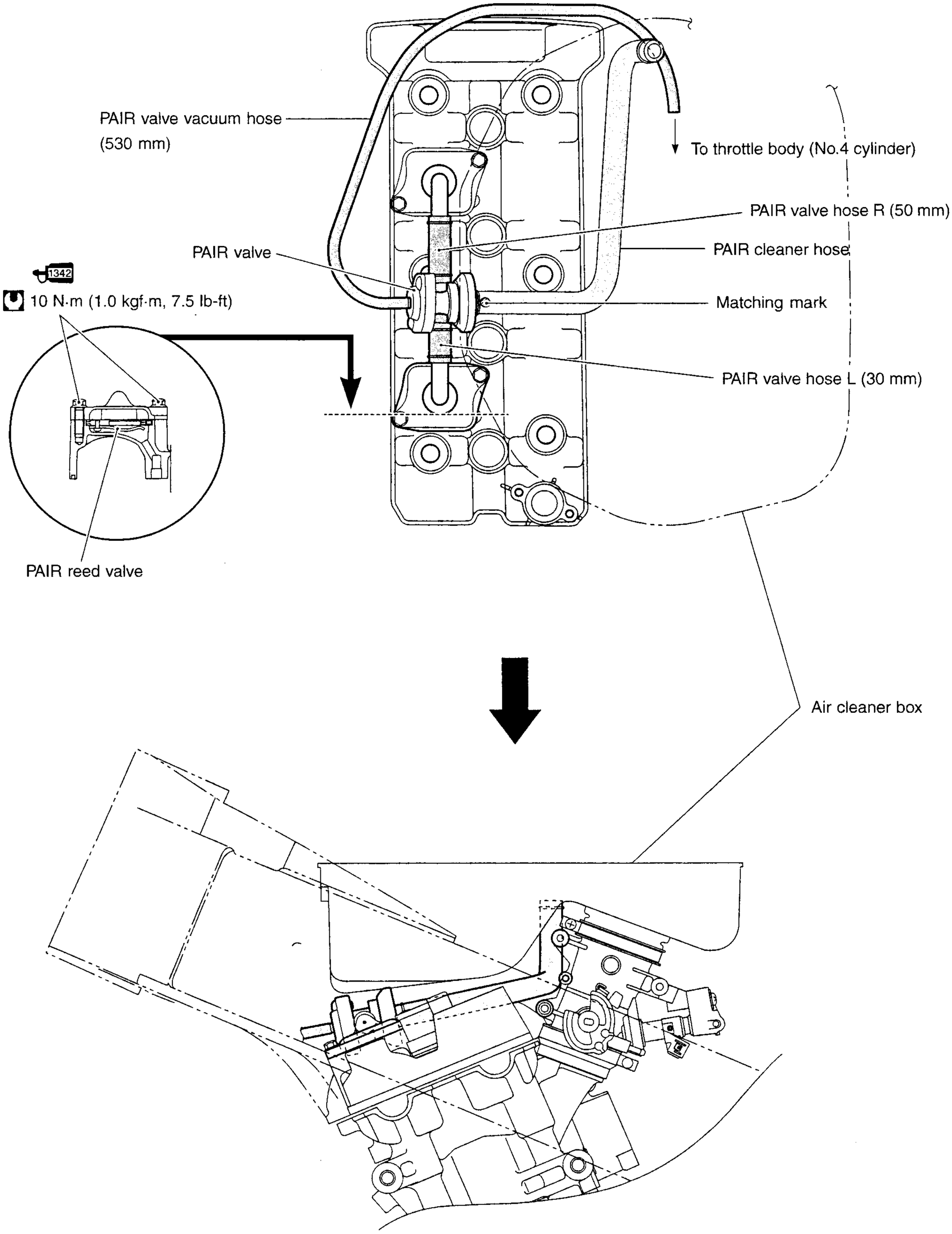

PAIR (AIR SUPPLY) SYSTEM INSPECTION

HOSES

- Inspect the hoses for wear or damage.
- Inspect that the hoses and pipes are securely connected.

PAIR REED VAVLE

- Remove the PAIR valve cover.
- Inspect the reed valve for the carbon deposit.
- If the carbon deposit is found in the reed valve, replace the PAIR control valve with a new one.

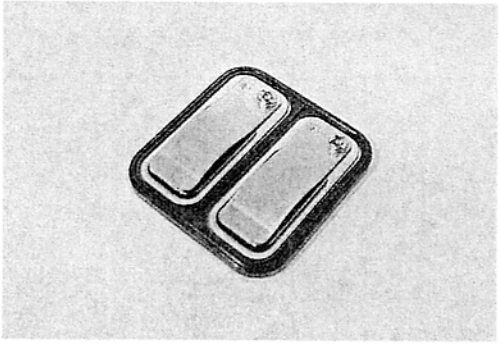

PAIR CONTROL VALVE

- Inspect that air flows through the PAIR control valve air inlet port to the air outlet ports.
- If air does not flow out, replace the PAIR valve with a new one.

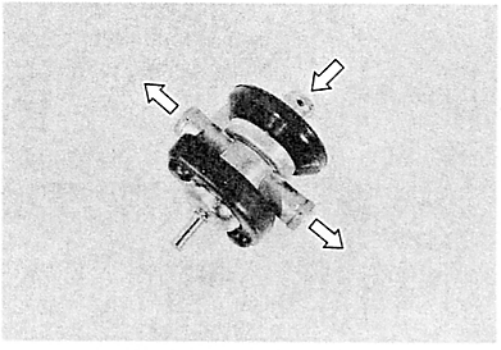

- Connect the vacuum pump gauge to the vacuum port of the control valve as shown in the photograph.
- Apply negative pressure of the specification slowly to the control valve and inspect the air flow.
- If air does not flow out, the control valve is in normal condition.
- If the control valve does not function within the specification, replace the control valve with a new one.

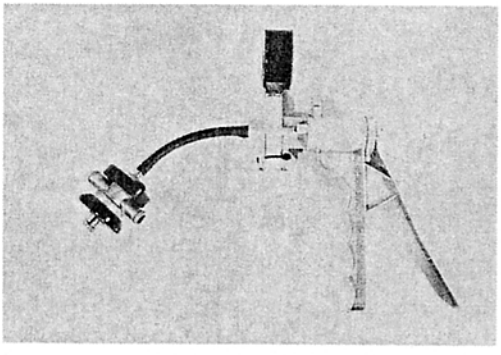

DATA Negative pressure range: More than 66.6 kPa (491 mmHg)

TOOL 09917-47010: Vacuum pump gauge

⚠ CAUTION

Use a hand operated vacuum pump to prevent the control valve damage.

WIRING DIAGRAM

FI SYSTEM WIRING DIAGRAM

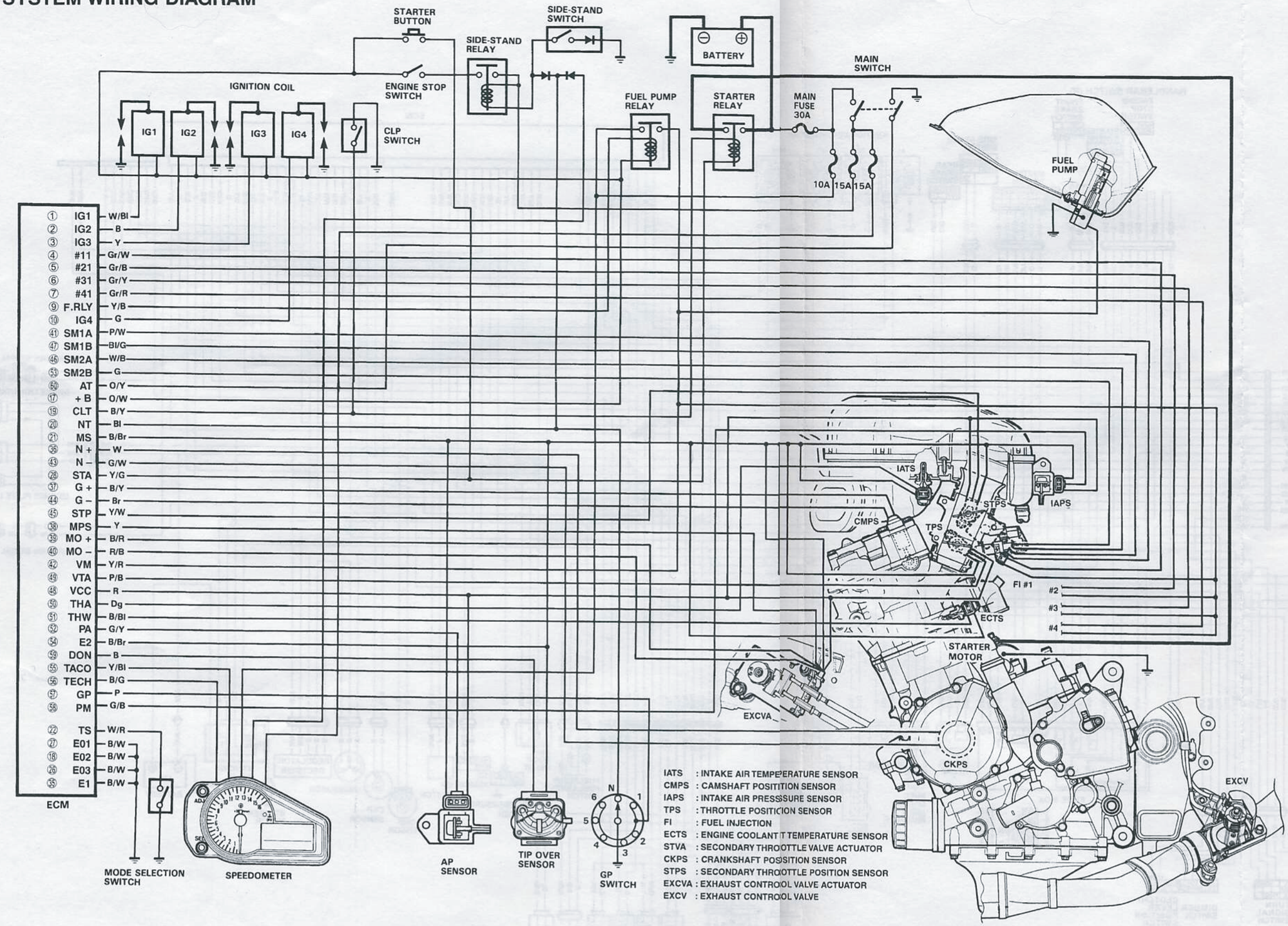

WIRE COLOR

B	: Black
Bl	: Blue
Br	: Brown
Dg	: Dark green
G	: Green
Gr	: Gray
Lbl	: Light blue
Lg	: Light green
O	: Orange
P	: Pink
R	: Red
W	: White
Y	: Yellow
B/Bl	: Black with Blue tracer
B/Br	: Black with Brown tracer
B/G	: Black with Green tracer
B/Lg	: Black with Light green tracer
B/R	: Black with Red tracer
B/W	: Black with White tracer
B/Y	: Black with Yellow tracer
Bl/B	: Blue with Black tracer
Bl/G	: Blue with Green tracer
Bl/R	: Blue with Red tracer
Bl/W	: Blue with White tracer
Bl/Y	: Blue with Yellow tracer
G/B	: Green with Black tracer
G/W	: Green with White tracer
G/Y	: Green with Yellow tracer
Gr/B	: Gray with Black tracer
Gr/R	: Gray with Red tracer
Gr/W	: Gray with White tracer
Gr/Y	: Gray with Yellow tracer
O/B	: Orange with Black tracer
O/Bl	: Orange with Blue tracer
O/G	: Orange with Green tracer
O/R	: Orange with Red tracer
O/W	: Orange with White tracer
O/Y	: Orange with Yellow tracer
P/B	: Pink with Black tracer
P/W	: Pink with White tracer
R/B	: Red with Black tracer
R/Bl	: Red with Blue tracer
R/W	: Red with White tracer
W/B	: White with Black tracer
W/Bl	: White with Blue tracer
W/G	: White with Green tracer
W/R	: White with Red tracer
Y/B	: Yellow with Black tracer
Y/Bl	: Yellow with Blue tracer
Y/G	: Yellow with Green tracer
Y/R	: Yellow with Red tracer
Y/W	: Yellow with White tracer

WIRING DIAGRAM

FOR E-03, 28, 33

T: TURN SIGNAL INDICATOR LIGHT
B: HIGH BEAM INDICATOR LIGHT
N: NEUTRAL INDICATOR LIGHT
F: FUEL INDICATOR LIGHT
OIL: OIL PRESSURE/ENGINE COOLANT TEMP./FI INDICATOR LIGHT

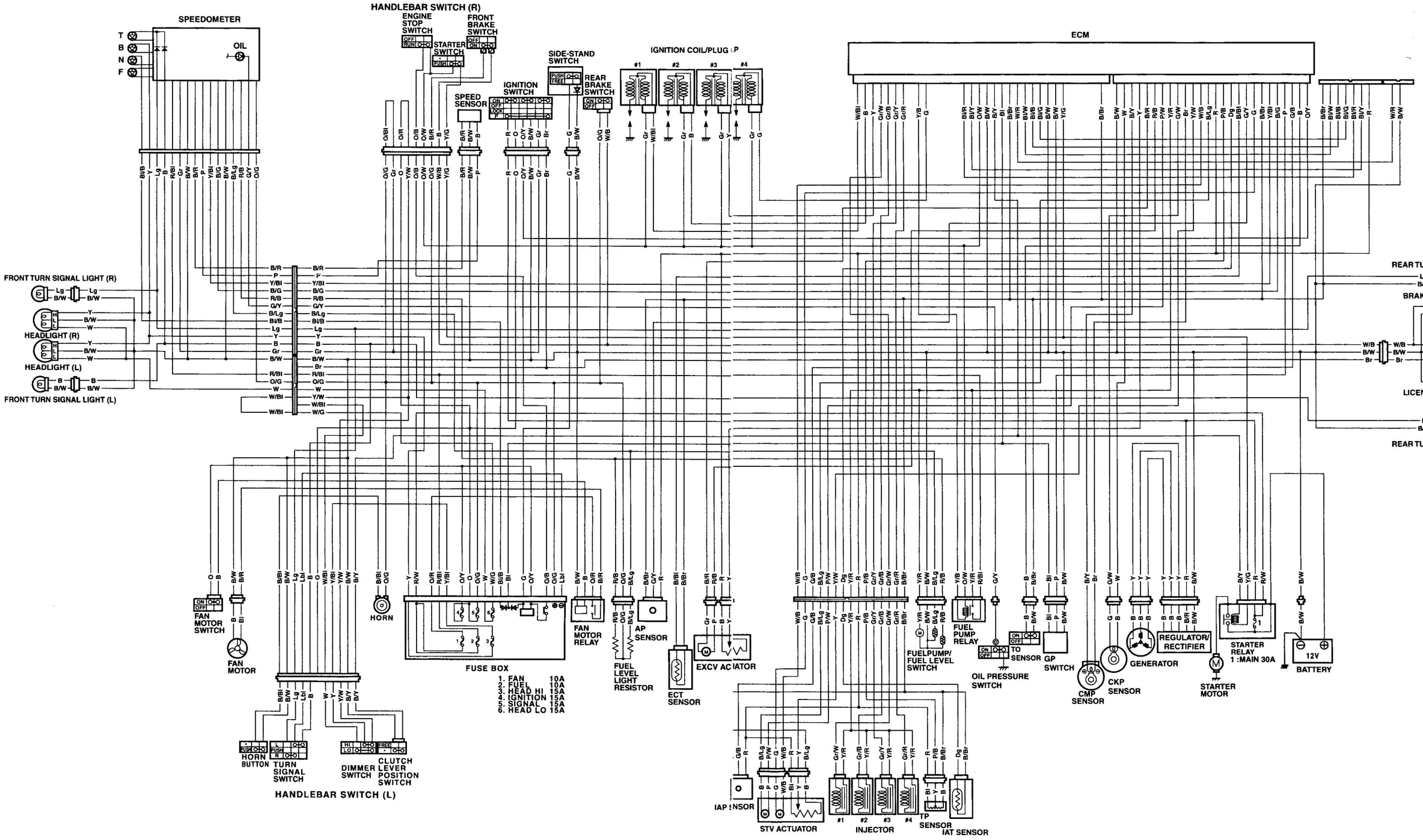

FOR E-19

T: TURN SIGNAL INDICATOR LIGHT
B: HIGH BEAM INDICATOR LIGHT
N: NEUTRAL INDICATOR LIGHT
F: FUEL INDICATOR LIGHT
OIL: OIL PRESSURE/ENGINE COOLANT TEMP./FI INDICATOR LIGHT

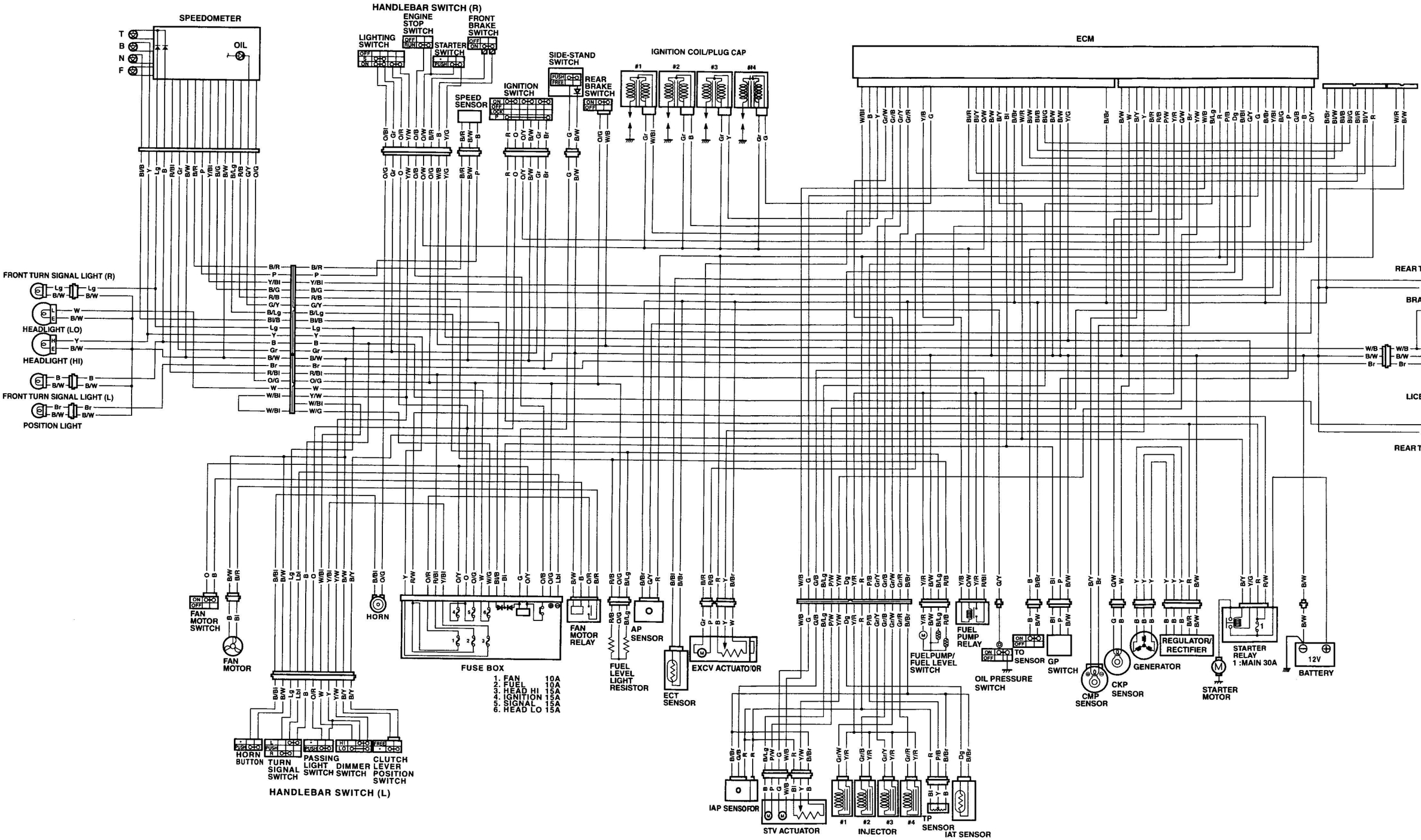

FOR E-24
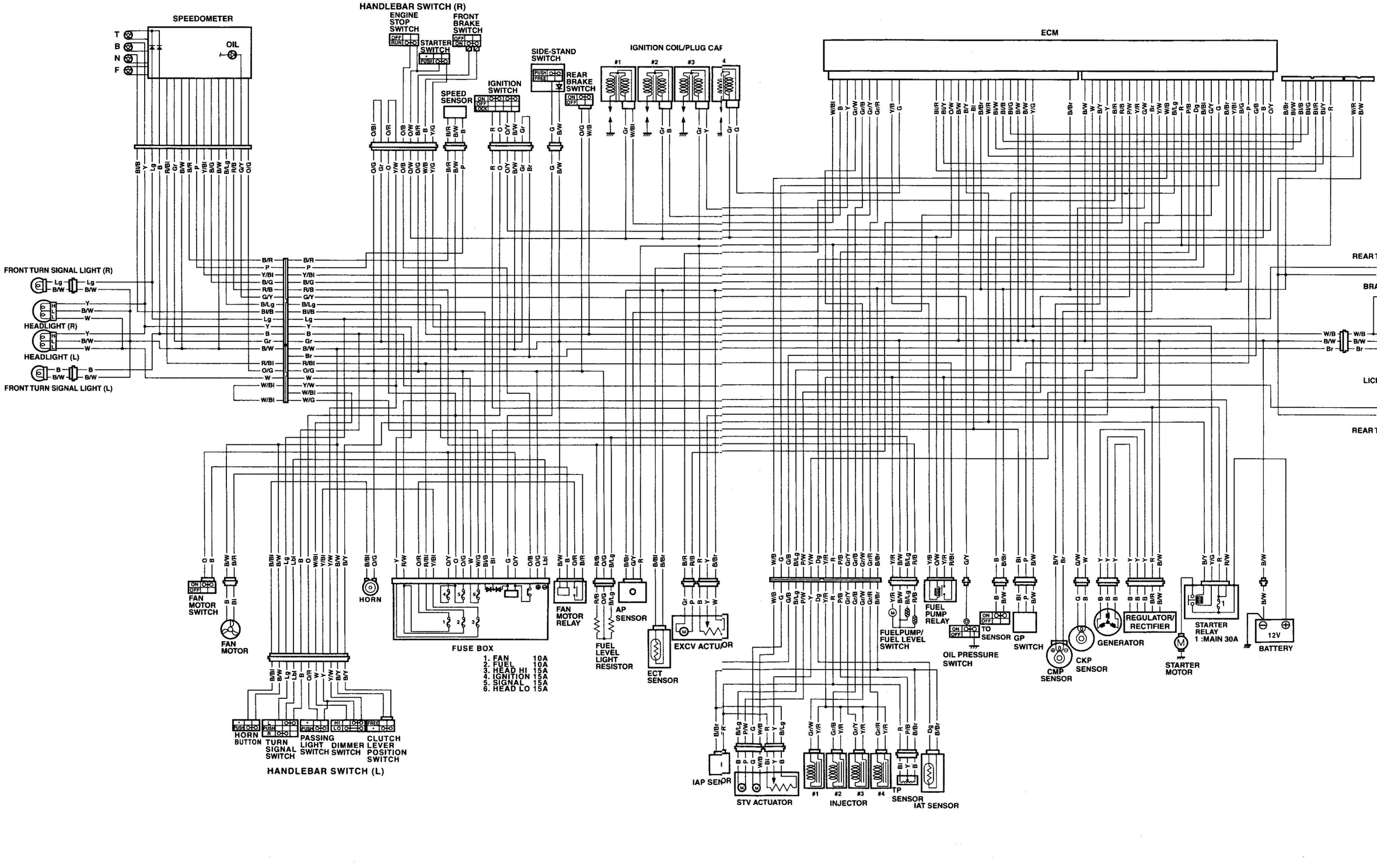
T: TURN SIGNAL INDICATOR LIGHT
B: HIGH BEAM INDICATOR LIGHT
N: NEUTRAL INDICATOR LIGHT
F: FUEL INDICATOR LIGHT
OIL: OIL PRESSURE/ENGINE COOLANT TEMP./FI INDICATOR LIGHT